Littelfuse
Expertise Applied | Answers Delivered

Littelfuse, Inc.
6133 North River Road, Suite 500
Rosemont, IL 60018 USA
(773) 628-1000

Subject: TLS Fuse Series Data Matrix Code
Document Number: LFPCN_PG0233
Date: 26 November 2026

Dear Valued Customer,

Thank you for your continued support and partnership with Littelfuse.
This letter serves as formal notification of a marking enhancement that will be implemented on all TLS Series (Telecommunications Fuses) from all Littelfuse facilities.
A 2D Data Matrix code will be added to the product marking to enable permanent piece-level traceability. All existing marking information will remain unchanged, and the current product label will be maintained, with only a layout update to accommodate the new QR code.
This change is intended to improve traceability capabilities and does not affect the product design, materials, dimensions, manufacturing process, fit, form, function, quality, reliability, or electrical performance.

From, fit, function, changes: None
Part number changes: No
Effective date: 16 Nov 2026
Replacement products: N/A
Last time buy: N/A

TLS Ordering Part Numbers: Same as current TLS Series
TLS Series Telecom Fuses | Littelfuse



Current fuse label



New fuse label



DATA MATRIX CODE:

P000DMMYYS12345678
RATING DATE SERIAL

1. (1) Start: P
2. (3) AMP: XXX
3. (1) Date spacer: D
4. (4) Date: MMYY
5. (1) Serial number spacer: S
6. (8) 8-digit serial: XXXXXXXX

Fuse Before	Fuse After
	

This notification is for your information and acknowledgement. If you have any questions, please contact your local Littelfuse customer or inside sales representative.

We highly value your business and look forward to assisting you whenever possible.

Sincerely,
Enrique Fernandez
Principal I, Product Manager
Energy & Industrial Infrastructure
Littelfuse, Inc.
Email: efernandez1@littelfuse.com
www.littelfuse.com

Telecommunications Fuses
TLS Series

Compact Current Limiting Telecommunications Fuse



Description

The TLS series fuses are specifically designed for the protection of telecommunications equipment. TLS fuses have been engineered to operate up to 170 V dc to provide current-limiting, short-circuit protection of cables and components found in the dc power distribution circuits of telecommunications systems. The compact design and multiple mounting configurations of the TLS series allow it to be used in a variety of applications. Mounting configurations include cartridge, vertical, leaded, bolt-in, or solder type. These fuses are also RoHS compliant.

Features & Benefits

FEATURES	BENEFITS
Compact design	Useful in a variety of applications
Current-limiting	Provides quick response to short-circuit events
Multiple mounting options	Suitable for a variety of applications
RoHS compliant	Reduces hazardous substances

Applications

- Telecommunications DC power distribution systems

Specifications

Voltage Rating	170 V dc
Ampere Range	1–125 A
Interrupting Rating	100 kA
Applicable Standards	UL 248-1 IEC-60269-4
Material	Body: glass melamine Caps: nickel-plated brass Leads: tin-plated copper
Environmental	RoHS Compliant, lead (Pb) free
Country of Origin	Mexico

©2025 Littelfuse, Inc.
Specifications are subject to change without notice.

Certification & Compliance

cURus	File: E71611
CE	EU_DOC-TLS_210921_0
TUV	Cert No: R 50494871 (70 kA IR)

Accessories

LFTD series disconnect switches
LFT30060 fuse holder for TLS series cartridge style fuse

Contact factory for more information.

Ordering Information
(Ferrule Version - TLS)

AMPERE	CATALOG NUMBER	PRODUCT MARKING	PACK QUANTITY	ORDERING NUMBER	UPC
1	TLS001	TLS 1A	10	0TLS001.T	079458 05375
2	TLS002	TLS 2A	10	0TLS002.T	079458 05592
3	TLS003	TLS 3A	10	0TLS003.T	079458 05376
5	TLS005	TLS 5A	10	0TLS005.T	079458 05377
6	TLS006	TLS 6A	10	0TLS006.T	079458 05378
10	TLS010	TLS 10A	10	0TLS010.T	079458 05379
15	TLS015	TLS 15A	10	0TLS015.T	079458 05380
20	TLS020	TLS 20A	10	0TLS020.T	079458 05381
25	TLS025	TLS 25A	10	0TLS025.T	079458 05382
30	TLS030	TLS 30A	10	0TLS030.T	079458 05383
35	TLS035	TLS 35A	10	0TLS035.T	079458 05573
40	TLS040	TLS 40A	10	0TLS040.T	079458 05384
50	TLS050	TLS 50A	10	0TLS050.T	079458 05385
60	TLS060	TLS 60A	10	0TLS060.T	079458 05386
70	TLS070	TLS 70A	10	0TLS070.T	079458 05387
80	TLS080	TLS 80A	10	0TLS080.T	079458 06160
90	TLS090	TLS 90A	10	0TLS090.T	079458 06161
100	TLS100	TLS 100A	10	0TLS100.T	079458 06162
110	TLS110	TLS 110A	10	0TLS110.T	079458 08788
125	TLS125	TLS 125A	10	0TLS125.T	079458 08789

Dimensions
Millimeters [inches]

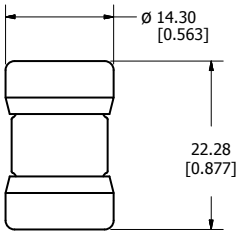

©2025 Littelfuse, Inc.
Specifications are subject to change without notice.

Ordering Information
(Solder Mount - LS Version)

AMPERE	CATALOG NUMBER	PRODUCT MARKING	PACK QUANTITY	ORDERING NUMBER	UPC
1	TLS001LS	TLS 1A-LS	10	0TLS001.TXLS	079458 10216
2	TLS002LS	TLS 2A-LS	10	0TLS002.TXLS	079458 10217
3	TLS003LS	TLS 3A-LS	10	0TLS003.TXLS	079458 10218
5	TLS005LS	TLS 5A-LS	10	0TLS005.TXLS	079458 10219
6	TLS006LS	TLS 6A-LS	10	0TLS006.TXLS	079458 10220
10	TLS010LS	TLS 10A-LS	10	0TLS010.TXLS	079458 10221
15	TLS015LS	TLS 15A-LS	10	0TLS015.TXLS	079458 10222
20	TLS020LS	TLS 20A-LS	10	0TLS020.TXLS	079458 10223
25	TLS025LS	TLS 25A-LS	10	0TLS025.TXLS	079458 10224
30	TLS030LS	TLS 30A-LS	10	0TLS030.TXLS	079458 10225
35	TLS035LS	TLS 35A-LS	10	0TLS035.TXLS	079458 10226
40	TLS040LS	TLS 40A-LS	10	0TLS040.TXLS	079458 10227
50	TLS050LS	TLS 50A-LS	10	0TLS050.TXLS	079458 10228
60	TLS060LS	TLS 60A-LS	10	0TLS060.TXLS	079458 10229
70	TLS070LS	TLS 70A-LS	10	0TLS070.TXLS	079458 10230
80	TLS080LS	TLS 80A-LS	10	0TLS080.TXLS	079458 16221
90	TLS090LS	TLS 90A-LS	10	0TLS090.TXLS	079458 16222
100	TLS100LS	TLS 100A-LS	10	0TLS100.TXLS	079458 16223

Dimensions
Millimeters [inches]

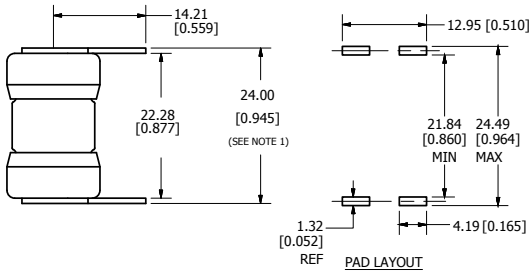

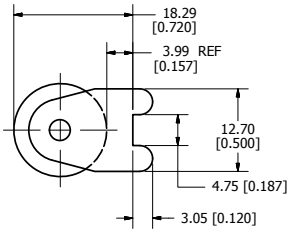

NOTE:
1. MEASUREMENT TAKEN AT END OF TERMINALS.

Ordering Information
(Solder Mount - LSE Version)

AMPERE	CATALOG NUMBER	PRODUCT MARKING	PACK QUANTITY	ORDERING NUMBER	UPC
35	TLS035LSE	TLS 35A-LSE	10	0TLS035.TXLSE	079458 22179
			250	0TLS035.ZXLSE	079458 24397
40	TLS040LSE	TLS 40A-LSE	10	0TLS040.TXLSE	079458 22180
			250	0TLS040.ZXLSE	079458 24398
50	TLS050LSE	TLS 50A-LSE	10	0TLS050.TXLSE	079458 22181
			250	0TLS050.ZXLSE	079458 24399
60	TLS060LSE	TLS 60A-LSE	10	0TLS060.TXLSE	079458 22182
			250	0TLS060.ZXLSE	079458 24400
70	TLS070LSE	TLS 70A-LSE	10	0TLS070.TXLSE	079458 22183
			250	0TLS070.ZXLSE	079458 24401
80	TLS080LSE	TLS 80A-LSE	10	0TLS080.TXLSE	079458 22184
			250	0TLS080.ZXLSE	079458 24402
90	TLS090LSE	TLS 90A-LSE	10	0TLS090.TXLSE	079458 22185
			250	0TLS090.ZXLSE	079458 24403
100	TLS100LSE	TLS 100A-LSE	10	0TLS100.TXLSE	079458 22186
			250	0TLS100.ZXLSE	079458 24404
110	TLS110LSE	TLS 110A-LSE	10	0TLS110.TXLSE	079458 22187
			250	0TLS110.ZXLSE	079458 24405
125	TLS125LSE	TLS 125A-LSE	10	0TLS125.TXLSE	079458 97400
			250	0TLS125.ZXLSE	079458 24406

Dimensions
Millimeters [inches]

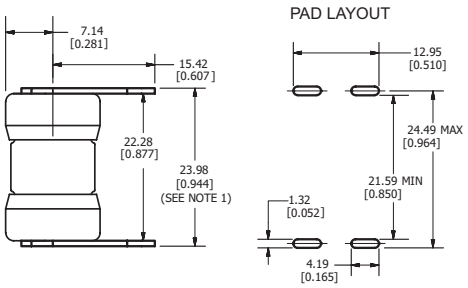

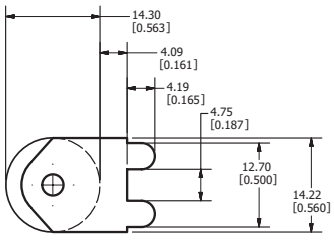

NOTE 1: Measurement taken at end of terminals.

©2025 Littelfuse, Inc.
Specifications are subject to change without notice.

Ordering Information
(Solder Mount - L Version)

AMPERE	CATALOG NUMBER	PRODUCT MARKING	PACK QUANTITY	ORDERING NUMBER	UPC
1	TLS001L	TLS 1A-L	10	0TLS001.TXL	079458 05574
2	TLS002L	TLS 2A-L	10	0TLS002.TXL	079458 05593
3	TLS003L	TLS 3A-L	10	0TLS003.TXL	079458 05575
5	TLS005L	TLS 5A-L	10	0TLS005.TXL	079458 05576
6	TLS006L	TLS 6A-L	10	0TLS006.TXL	079458 05577
10	TLS010L	TLS 10A-L	10	0TLS010.TXL	079458 05578
15	TLS015L	TLS 15A-L	10	0TLS015.TXL	079458 05579
20	TLS020L	TLS 20A-L	10	0TLS020.TXL	079458 05580
25	TLS025L	TLS 25A-L	10	0TLS025.TXL	079458 05581
30	TLS030L	TLS 30A-L	10	0TLS030.TXL	079458 05582
35	TLS035L	TLS 35A-L	10	0TLS035.TXL	079458 05583
40	TLS040L	TLS 40A-L	10	0TLS040.TXL	079458 05584
50	TLS050L	TLS 50A-L	10	0TLS050.TXL	079458 05585
60	TLS060L	TLS 60A-L	10	0TLS060.TXL	079458 05586
70	TLS070L	TLS 70A-L	10	0TLS070.TXL	079458 05587
80	TLS080L	TLS 80A-L	10	0TLS080.TXL	079458 11382
90	TLS090L	TLS 90A-L	10	0TLS090.TXL	079458 11383
100	TLS100L	TLS 100A-L	10	0TLS100.TXL	079458 11384

Dimensions
Millimeters [inches]

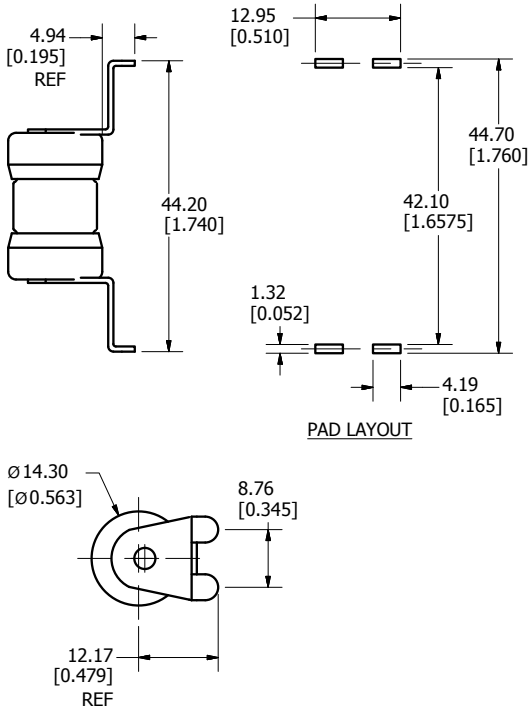

Ordering Information
(Solder Mount - LSA Version)

AMPERE	CATALOG NUMBER	PRODUCT MARKING	PACK QUANTITY	ORDERING NUMBER	UPC
1	TLS001LSA	TLS 1A-LSA	20	0TLS001.SLSA	079458 82640
2	TLS002LSA	TLS 2A-LSA	20	0TLS002.SLSA	079458 82641
3	TLS003LSA	TLS 3A-LSA	20	0TLS003.SLSA	079458 82642
5	TLS005LSA	TLS 5A-LSA	20	0TLS005.SLSA	079458 82643
6	TLS006LSA	TLS 6A-LSA	20	0TLS006.SLSA	079458 82644
10	TLS010LSA	TLS 10A-LSA	20	0TLS010.SLSA	079458 82645
15	TLS015LSA	TLS 15A-LSA	20	0TLS015.SLSA	079458 82646
20	TLS020LSA	TLS 20A-LSA	20	0TLS020.SLSA	079458 82647
25	TLS025LSA	TLS 25A-LSA	20	0TLS025.SLSA	079458 82648
30	TLS030LSA	TLS 30A-LSA	20	0TLS030.SLSA	079458 82649
35	TLS035LSA	TLS 35A-LSA	20	0TLS035.SLSA	079458 82650
40	TLS040LSA	TLS 40A-LSA	20	0TLS040.SLSA	079458 82651
50	TLS050LSA	TLS 50A-LSA	20	0TLS050.SLSA	079458 96783
60	TLS060LSA	TLS 60A-LSA	20	0TLS060.SLSA	079458 82652
70	TLS070LSA	TLS 70A-LSA	20	0TLS070.SLSA	079458 82653
80	TLS080LSA	TLS 80A-LSA	20	0TLS080.SLSA	079458 82654
90	TLS090LSA	TLS 90A-LSA	20	0TLS090.SLSA	079458 82655
100	TLS100LSA	TLS 100A-LSA	20	0TLS100.SLSA	079458 82656

Dimensions
Millimeters [inches]

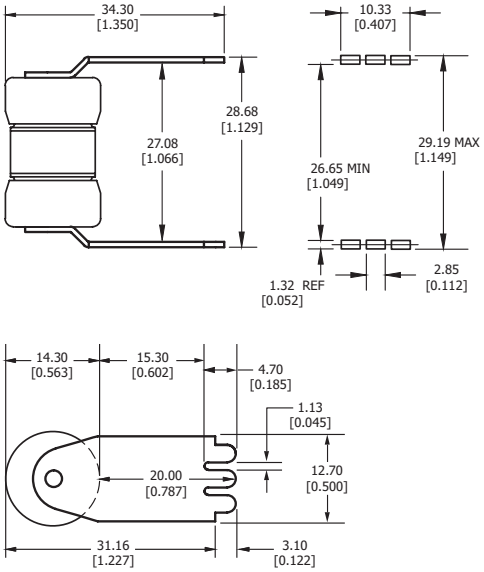

©2025 Littelfuse, Inc.
Specifications are subject to change without notice.

Ordering Information
(Solder Mount - V Version)

AMPERE	CATALOG NUMBER	PRODUCT MARKING	PACK QUANTITY	ORDERING NUMBER	UPC
1	TLS001V	TLS 1A-V	10	0TLS001.TXV	079458 06184
2	TLS002V	TLS 2A-V	10	0TLS002.TXV	079458 06185
3	TLS003V	TLS 3A-V	10	0TLS003.TXV	079458 06186
5	TLS005V	TLS 5A-V	10	0TLS005.TXV	079458 06187
6	TLS006V	TLS 6A-V	10	0TLS006.TXV	079458 06188
10	TLS010V	TLS 10A-V	10	0TLS010.TXV	079458 06189
15	TLS015V	TLS 15A-V	10	0TLS015.TXV	079458 06190
20	TLS020V	TLS 20A-V	10	0TLS020.TXV	079458 06191
25	TLS025V	TLS 25A-V	10	0TLS025.TXV	079458 06192
30	TLS030V	TLS 30A-V	10	0TLS030.TXV	079458 06193
35	TLS035V	TLS 35A-V	10	0TLS035.TXV	079458 06194
40	TLS040V	TLS 40A-V	10	0TLS040.TXV	079458 06195
50	TLS050V	TLS 50A-V	10	0TLS050.TXV	079458 06196
60	TLS060V	TLS 60A-V	10	0TLS060.TXV	079458 06197
70	TLS070V	TLS 70A-V	10	0TLS070.TXV	079458 06198
80	TLS080V	TLS 80A-V	10	0TLS080.TXV	079458 10801
90	TLS090V	TLS 90A-V	10	0TLS090.TXV	079458 10802
100	TLS100V	TLS 100A-V	10	0TLS100.TXV	079458 10803

Dimensions
Millimeters [inches]

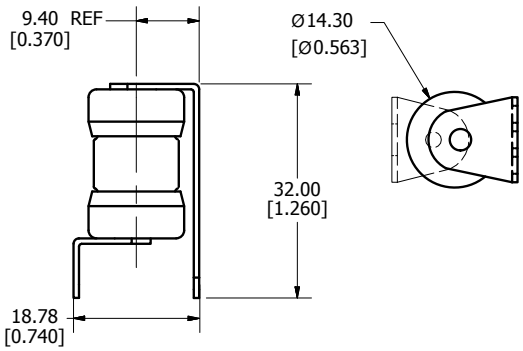

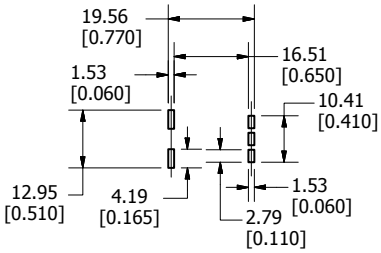

PAD LAYOUT

Ordering Information
(Solder Mount - MB Version)

AMPERE	CATALOG NUMBER	PRODUCT MARKING	PACK QUANTITY	ORDERING NUMBER	UPC
1	TLS001MB	TMB 1A-MB	10	0TLS001.TXMB	079458 80126
2	TLS002MB	TMB 2A-MB	10	0TLS002.TXMB	079458 80127
3	TLS003MB	TMB 3A-MB	10	0TLS003.TXMB	079458 80128
5	TLS005MB	TMB 5A-MB	10	0TLS005.TXMB	079458 80129
6	TLS006MB	TMB 6A-MB	10	0TLS006.TXMB	079458 80130
10	TLS010MB	TMB 10A-MB	10	0TLS010.TXMB	079458 80131
15	TLS015MB	TMB 15A-MB	10	0TLS015.TXMB	079458 80132
20	TLS020MB	TMB 20A-MB	10	0TLS020.TXMB	079458 80133
25	TLS025MB	TMB 25A-MB	10	0TLS025.TXMB	079458 80134
30	TLS030MB	TMB 30A-MB	10	0TLS030.TXMB	079458 80135
35	TLS035MB	TMB 35A-MB	10	0TLS035.TXMB	079458 80136
40	TLS040MB	TMB 40A-MB	10 200	0TLS040.TXMB 0TLS040.ZXMB	079458 11668 079458 12166
50	TLS050MB	TMB 50A-MB	10	0TLS050.TXMB	079458 80137
60	TLS060MB	TMB 60A-MB	10	0TLS060.TXMB	079458 80138
70	TLS070MB	TMB 70A-MB	10	0TLS070.TXMB	079458 80139
80	TLS080MB	TMB 80A-MB	10	0TLS080.TXMB	079458 80140
90	TLS090MB	TMB 90A-MB	10	0TLS090.TXMB	079458 80141
100	TLS100MB	TMB 100A-MB	10	0TLS100.TXMB	079458 80142

Dimensions
Millimeters [inches]

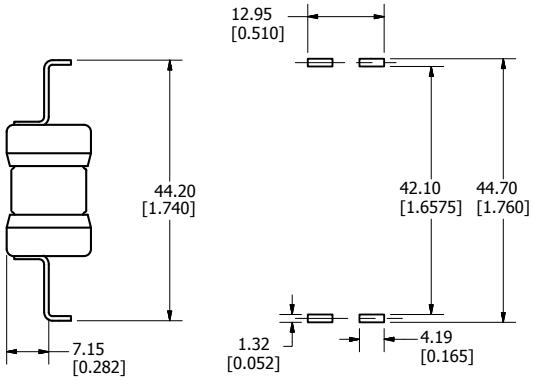

PAD LAYOUT

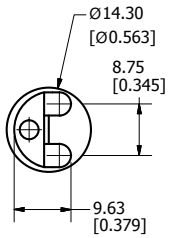

©2025 Littelfuse, Inc.
Specifications are subject to change without notice.

Ordering Information
(Bolt-In Mount - LR Version)

AMPERE	CATALOG NUMBER	PRODUCT MARKING	PACK QUANTITY	ORDERING NUMBER	UPC
35	TLS035LR	TLS 35A-LR	10	0TLS035.TXLR	079458 24407
			330	0TLS035.ZXLR	079458 26623
40	TLS040LR	TLS 40A-LR	10	0TLS040.TXLR	079458 24408
			330	0TLS040.ZXLR	079458 22624
50	TLS050LR	TLS 50A-LR	10	0TLS050.TXLR	079458 24968
			330	0TLS050.ZXLR	079458 26625
60	TLS060LR	TLS 60A-LR	10	0TLS060.TXLR	079458 24969
			330	0TLS060.ZXLR	079458 26626
70	TLS070LR	TLS 70A-LR	10	0TLS070.TXLR	079458 24970
			330	0TLS070.ZXLR	079458 26627
80	TLS080LR	TLS 80A-LR	10	0TLS080.TXLR	079458 24971
			330	0TLS080.ZXLR	079458 26628
90	TLS090LR	TLS 90A-LR	10	0TLS090.TXLR	079458 24972
			330	0TLS090.ZXLR	079458 26629
100	TLS100LR	TLS 100A-LR	10	0TLS100.TXLR	079458 24973
			330	0TLS100.ZXLR	079458 26630
110	TLS110LR	TLS 110A-LR	10	0TLS110.TXLR	079458 24974
			330	0TLS110.ZXLR	079458 26631
125	TLS125LR	TLS 125A-LR	10	0TLS125.TXLR	079458 24975
			330	0TLS125.ZXLR	079458 26632

Dimensions
Millimeters [inches]

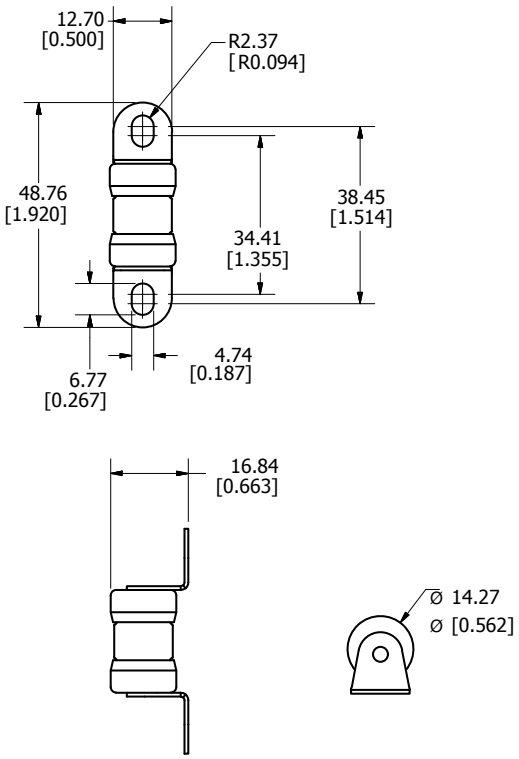

Ordering Information
(Bolt-In Mount - LB Version)

AMPERE	CATALOG NUMBER	PRODUCT MARKING	PACK QUANTITY	ORDERING NUMBER	UPC
1	TLS001LB	TLS 1A-LB	10	0TLS001.TXLB	079458 06169
2	TLS002LB	TLS 2A-LB	10	0TLS002.TXLB	079458 06170
3	TLS003LB	TLS 3A-LB	10	0TLS003.TXLB	079458 06171
5	TLS005LB	TLS 5A-LB	10	0TLS005.TXLB	079458 06172
6	TLS006LB	TLS 6A-LB	10	0TLS006.TXLB	079458 06173
10	TLS010LB	TLS 10A-LB	10	0TLS010.TXLB	079458 06174
15	TLS015LB	TLS 15A-LB	10	0TLS015.TXLB	079458 06175
20	TLS020LB	TLS 20A-LB	10	0TLS020.TXLB	079458 06176
25	TLS025LB	TLS 25A-LB	10	0TLS025.TXLB	079458 06177
30	TLS030LB	TLS 30A-LB	10	0TLS030.TXLB	079458 06178
35	TLS035LB	TLS 35A-LB	10	0TLS035.TXLB	079458 06179
40	TLS040LB	TLS 40A-LB	10	0TLS040.TXLB	079458 06180
50	TLS050LB	TLS 50A-LB	10	0TLS050.TXLB	079458 06181
60	TLS060LB	TLS 60A-LB	10	0TLS060.TXLB	079458 06182
70	TLS070LB	TLS 70A-LB	10	0TLS070.TXLB	079458 06183
80	TLS080LB	TLS 80A-LB	10	0TLS080.TXLB	079458 12157
90	TLS090LB	TLS 90A-LB	10	0TLS090.TXLB	079458 12158
100	TLS100LB	TLS 100A-LB	10	0TLS100.TXLB	079458 12159

Dimensions
Millimeters [inches]

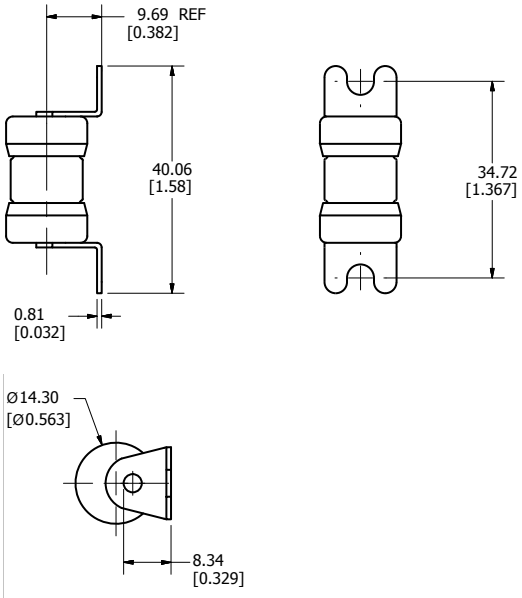

NOTES:

RECOMMENDED HARDWARE: #8 SLOTTED HEX WASHER HEAD MACHINE SCREW

TORQUE: 10 IN-LB

©2025 Littelfuse, Inc.
Specifications are subject to change without notice.

Time Current Curves

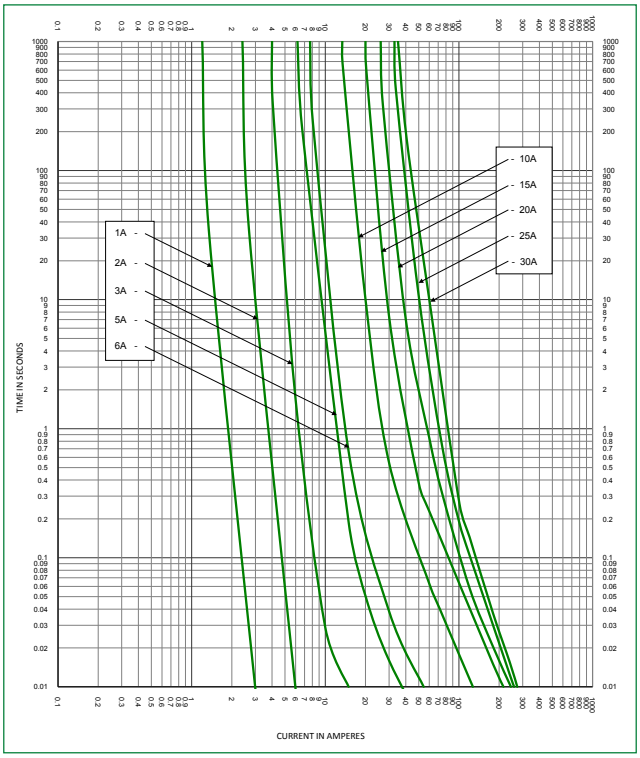

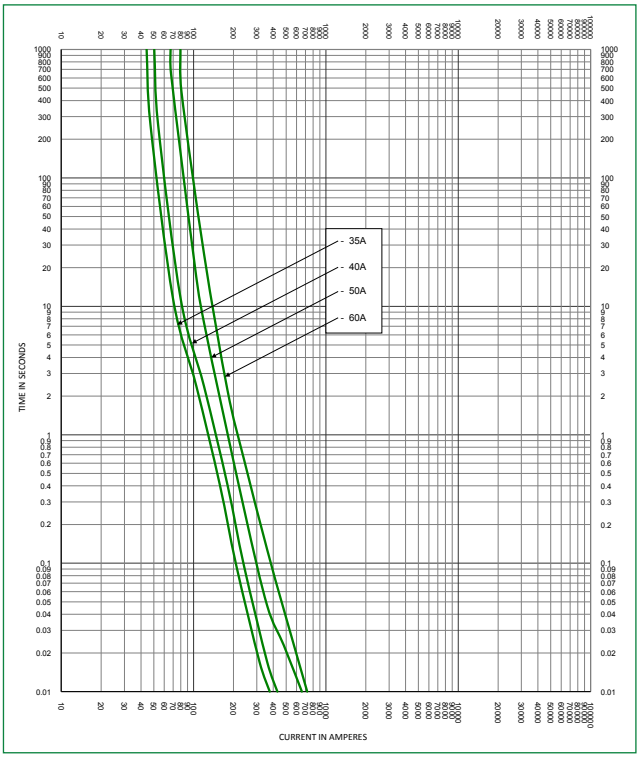

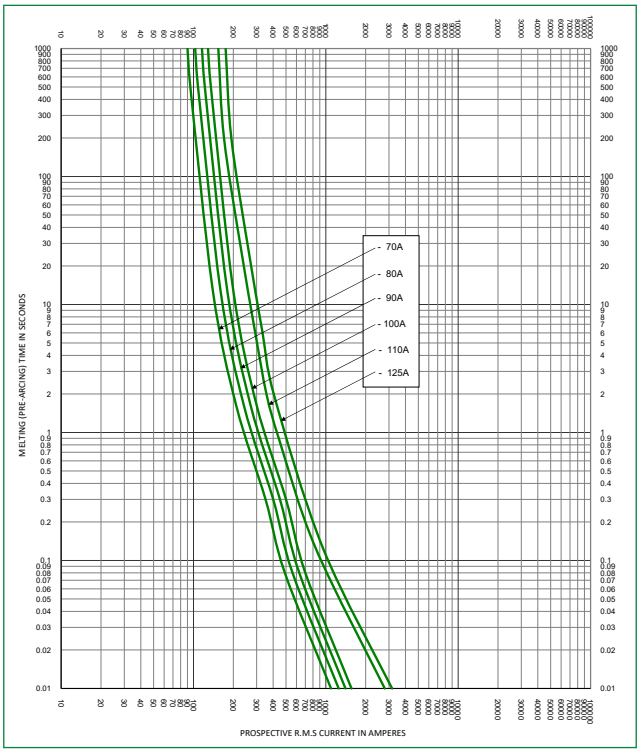

Temperature Derating Curve

Ambient temperature: temperature of air immediately surrounding fuse

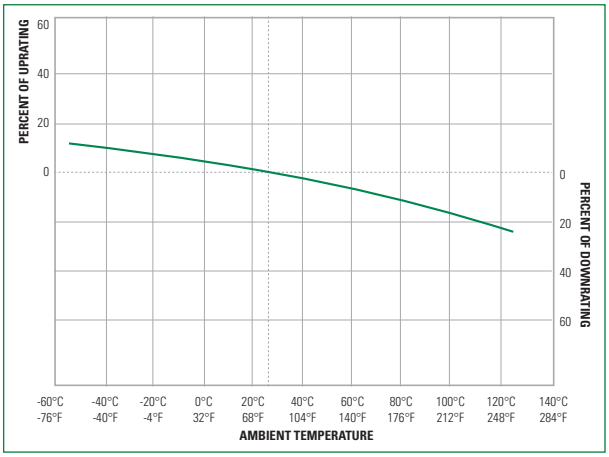

©2025 Littelfuse, Inc.
Specifications are subject to change without notice.

Recommended Process and Soldering Parameters

WAVE PARAMETER	LEAD FREE RECOMMENDATION
Preheat:	(Typical Industry Recommendation)
Temperature Minimum:	130 °C
Temperature Maximum:	—
Pre-heat Time	75 SECONDS MAXIMUM
Solder Pot Temperature	280 °C MAXIMUM
Solder Dwell Time	270 °C for 8 Seconds Maximum
Complete Cycle Time	250 Seconds Maximum

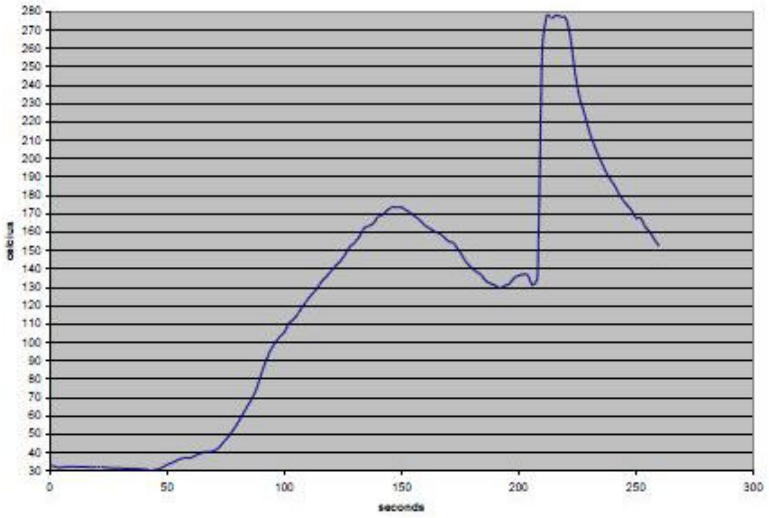

Disclaimer Notice – Information furnished is believed to be accurate and reliable. However, users should independently evaluate the suitability of and test each product selected for their own applications. Littelfuse products are not designed for, and may not be used in, all applications. Read complete Disclaimer Notice at **www.littelfuse.com/product-disclaimer.**

©2025 Littelfuse, Inc.
Specifications are subject to change without notice.