Littelfuse, Inc.
8755 West Higgins Road, Suite 500
Chicago, IL 60631 USA
(773) 628-1000

Product Change Notice (PCN)

9/2/2026

LFPCN2609001

New assembly plant for Littelfuse high voltage MOSFET in i4 package

Dear valued customers and partners,

Littelfuse intends to transfer the assembly of its high-voltage MOSFET in isolated ISOPLUS i4pac packages into its in-house assembly facility in the Philippines soon. This transfer will improve our supply chain efficiency, and our service levels for customers.

. Affected part numbers: please refer to Affected part numbers (p. 3)

. Schedule: parts will be delivered from the in-house factory starting from **December 2026.**

Summary of changes	
Country of origin	No change - Philippines
Form, fit, function	No change
Part number	No change
Bill of material	Full tin pin plating in the new location, no other changes
Assembly process flow	No change
Assembly equipment	Indentical or better
Marking & Labeling	Some differences. Details in appendix.
Packing	Some differences. Details in appendix

A lack of reply to this change notification before **Oct. 5th, 2026,** will be considered an acceptance of the change.

Please contact your Regional Sales representative of Field Application Engineer for any inquiry or further details.

Best Regards,
Francois Perraud
Product Marketing Manager
Littelfuse, Inc.
FPerraud@Littelfuse.com

Contents

Affected part numbers 3
Bill of Material changes 3
Qualification summary 3
Package Outline / Dimension 4
Tube dimensions – summary of changes 5
Change of markings 6
Examples of new marking and labels 7
New location – example part marking 7
New location – example labels 8

Affected part numbers

Part number	Description
IXTF1N450	4500V, 80mΩ n-channel MOSFET in i4pak
IXTF1N450BS	4500V, 80mΩ n-channel MOSFET in i4pak
IXTF02N450	4500V, 625mΩ n-channel MOSFET in i4pak
IXTF1R4N450	4500V, 40mΩ n-channel MOSFET in i4pak

Bill of Material changes

ASSEMBLY COMPONENT	Change
Die	No
DCB	No
Lead frame	No
Solder Material	No
Wire	No
Molding Compound	No
Pin plating material	Yes (new: pure tin)

Qualification summary

A summary of reliability test results is available on request.

Package Outline / Dimension

Within existing datasheet tolerances, provided below as reference.

ISOPLUS i4-Pak™ (HV) Outline

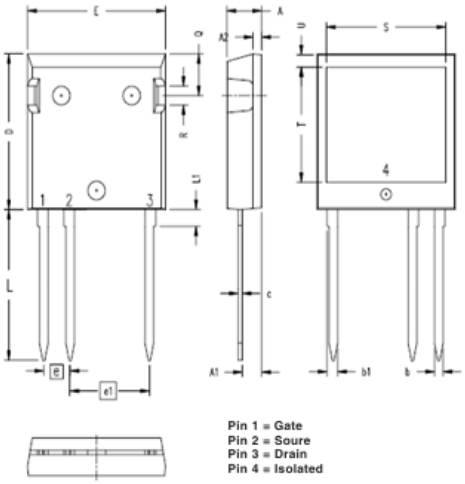

SYM	INCHES		MILLIMETERS	
	MIN	MAX	MIN	MAX
A	.190	.205	4.83	5.21
A1	.102	.118	2.59	3.00
A2	.046	.085	1.17	2.16
b	.045	.055	1.14	1.40
b1	.058	.068	1.47	1.73
C	.020	.029	0.51	0.74
D	.819	.840	20.80	21.34
E	.770	.799	19.56	20.29
e	.150 BSC		3.81 BSC	
e1	.450 BSC		11.43 BSC	
L	.780	.840	19.81	21.34
L1	.083	.102	2.11	2.59
Q	.210	.244	5.33	6.20
R	.100	.180	2.54	4.57
S	.660	.690	16.76	17.53
T	.590	.620	14.99	15.75
U	.065	.080	1.65	2.03

Tube dimensions – summary of changes

PARAMETERS	EXISTING LOCATION	NEW LOCATION	Difference
Shipping Tube			
Length, mm	20.95 - 21.05	20.95 – 21.05	No
Width, mm	1.79 – 1.81	1.79 -1.81	No
Height, mm	0.32 – 0.34	0.28 - 0.33	Yes
Material Thickness, mm	0.03	0.03	No
Tube Opening, mm	0.26 x1.74	0.24 x 1.75	Yes
Quantity per tube	25	25	No
Anti-static	Yes	Yes	No
End Plug			
Design	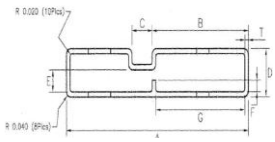	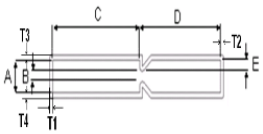	Yes

Change of markings

Description	Existing location	New location	Change
Unit Marking			
Logo	IXYS	IXYS A Littelfuse Technology	Y
UL Logo	No UL Logo	With UL Logo	Y
Isoplus Trademark	None	With trademark	Y
Partname	Device Name	Device Name	N
Date Code	FPMMDDYY	YYWW	Y
Assembly line code	P	M	Y
Lot #	Fab lot ID	Lipa Lot #	Y
Tube Label			
Logo	IXYS	IXYS A Littelfuse Technology	Y
Qty per tube	25	25	N
Part Number	Device Name	Device Name	N
Lot No	Fab Lot ID	Lipa Lot ID format	Y
Country of Origin	Yes	Yes	N
Code Type	Barcode	Barcode + 2D Code	Y
Date Code	None	YYWW	Y
Assembly line code	None	M	Y
Box Label			
RoHS Label			Y
Logo	IXYS	IXYS A Littelfuse Technology	Y
Qty per Box	250	250	N
Part Number	Device Name	Device Name	N
Lot No	Fab Lot ID	Lipa Lot ID format	Y
Country of Origin	Yes	Yes	N
Code Type	1DBarcode	1Barcode + 2D Code	Y
Date Code	None	YYWW	Y
Assembly line code	None	M	Y

Examples of new marking and labels

New location – example part marking



ISOPLUS i4 pack - part marking (arbitrary part number - for illustration only)

New location – example labels

Tube label

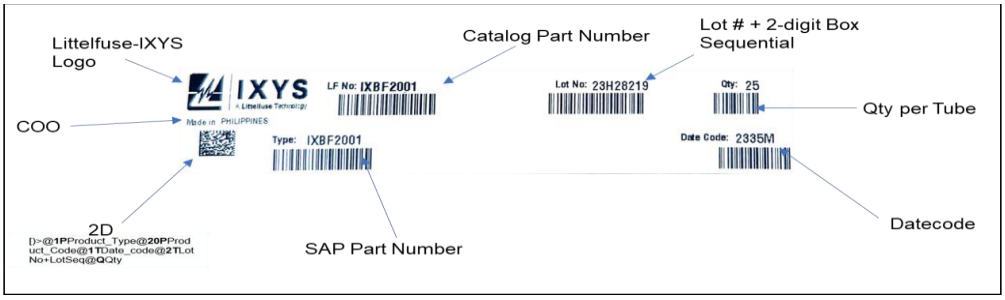

Inner box label

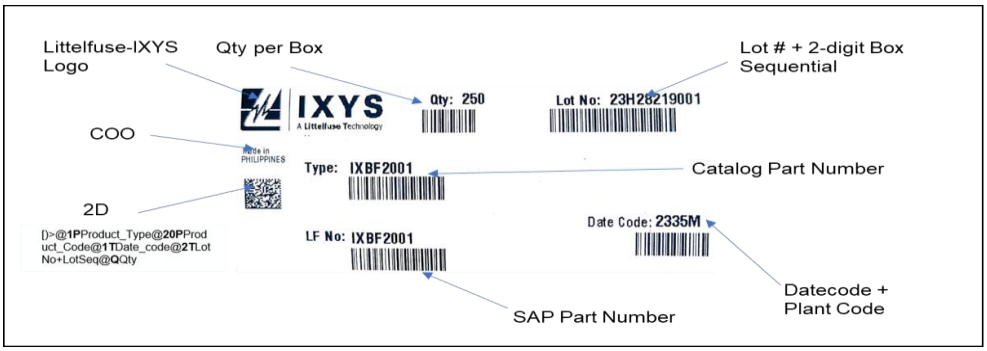

RoHS label

