APTIV

Connection Systems

PCN:	GT 150 FEMALE SN SEALED localization

Subject:	GT 150 FEMALE SN SEALED localization

Date:	October 26,2026

Description :	DCS Shanghai Plant has completed GT 150 SN SEALED localization. Domestic PN is 15326266.
Assessment of Change:	Terminal body dimensions are completely identical, spacing of the terminal reels is different,15396680 is 12mm,15326266 is 10.9mm.

Before Change:	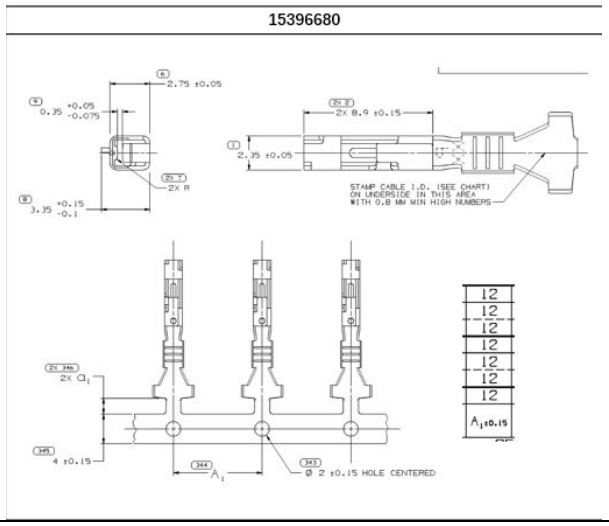
After Change:	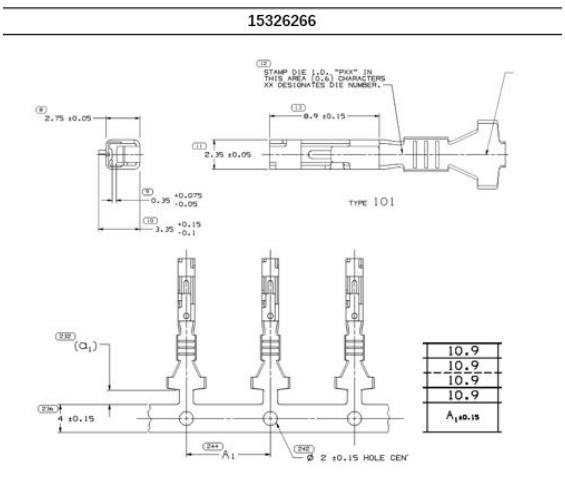

Ordering Instructions:	• For samples to review the change parts can be ordered on “New Part Availability Date” • The last day Aptiv plants can ship the old part numbers is the “End Effective Date” noted in the table below. • Thus, EDI Transmission for orders of CURRENT Part Numbers must be submitted by the “Requirements Schedule Effective Date”.

APTIV

Connection Systems

THE TABLE BELOW PROVIDES DETAILS RELATED TO THE AFFECTED CURRENT PART NUMBER AND NEW PART NUMBER CROSS-REFERENCE.

COMPONENT DESCRIPTION	Aptiv Current PN	Aptiv New PN	New Part Availability (PPAP)	Requirements Schedule Effective Date	Estimate End Effective Date
GT 150 Female SN SEALED	15396680	15326266	Done	2026/12	

PCN Actions :	• **ANY BEFORE CHANGE DESIGN STOCK OF THE CURRENT PART NUMBERS IS ACCEPTABLE TO USE.** • **IF RECEIVE NO REPLY WITHIN TWO WEEKS, SEE AS APPROVE THE TRANSFER TIMING.**

Thank you for your cooperation in this effort. If you require additional technical information, please feel free to contact us

Regards,

Hao.jin
Application Engineer

APTIV

Hi Team,

Pls send this notice to all affected customers

Pls use this MPN:DCS15396680 to find the affected customer lists

The IP&E Specialist

Capacitors

Circuit Protection

Connectors

Discretes

Electromagnetic

Electromechanical

Optoelectronics

Power

Resistors

Sensors

Jonathan Lim
Director of Quality, Asia
TTI IP&E - Asia

Office: +65 6419 3262
Mobile: +65 9781 4394
Corporate: +65 6788 9200
Fax: +65 6788 9300
Location: Singapore
Jonathan.Lim@ttiinc.com

A Berkshire Hathaway Company
Please consider the environment before printing this e-mail.

- **15396680和15326266差异说明**

15396680	15326266
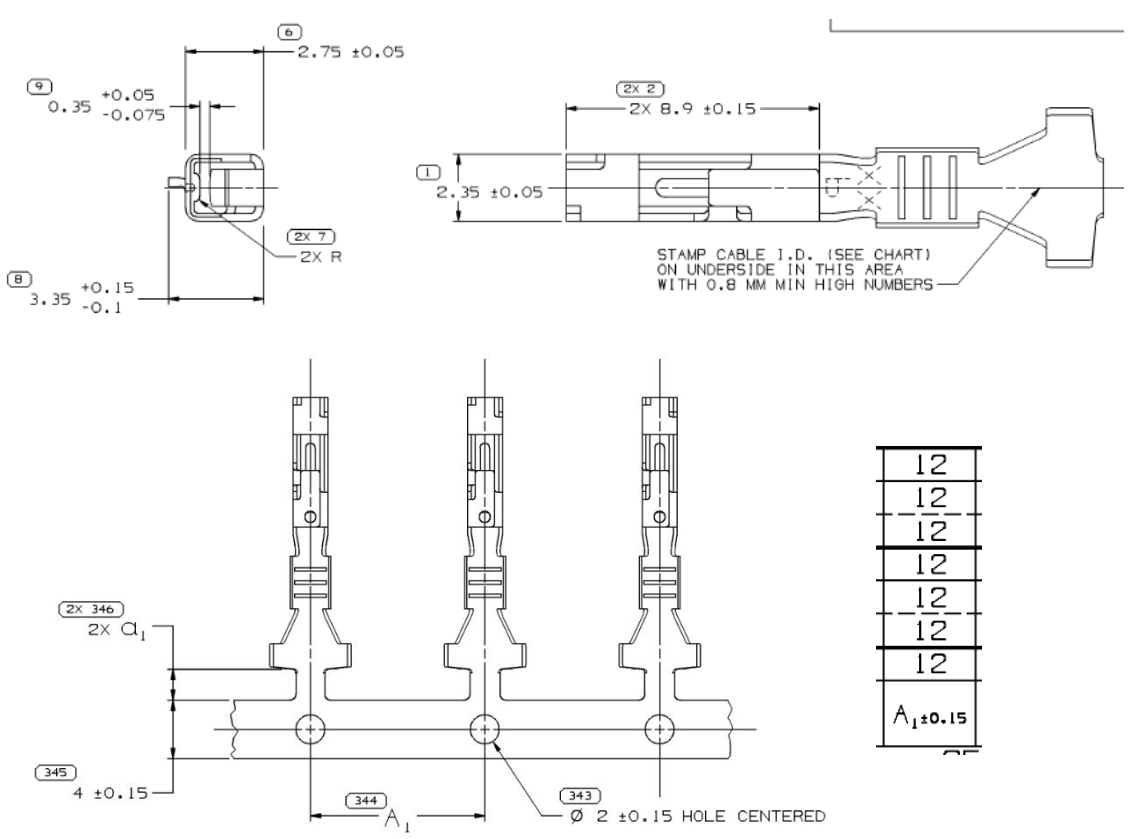	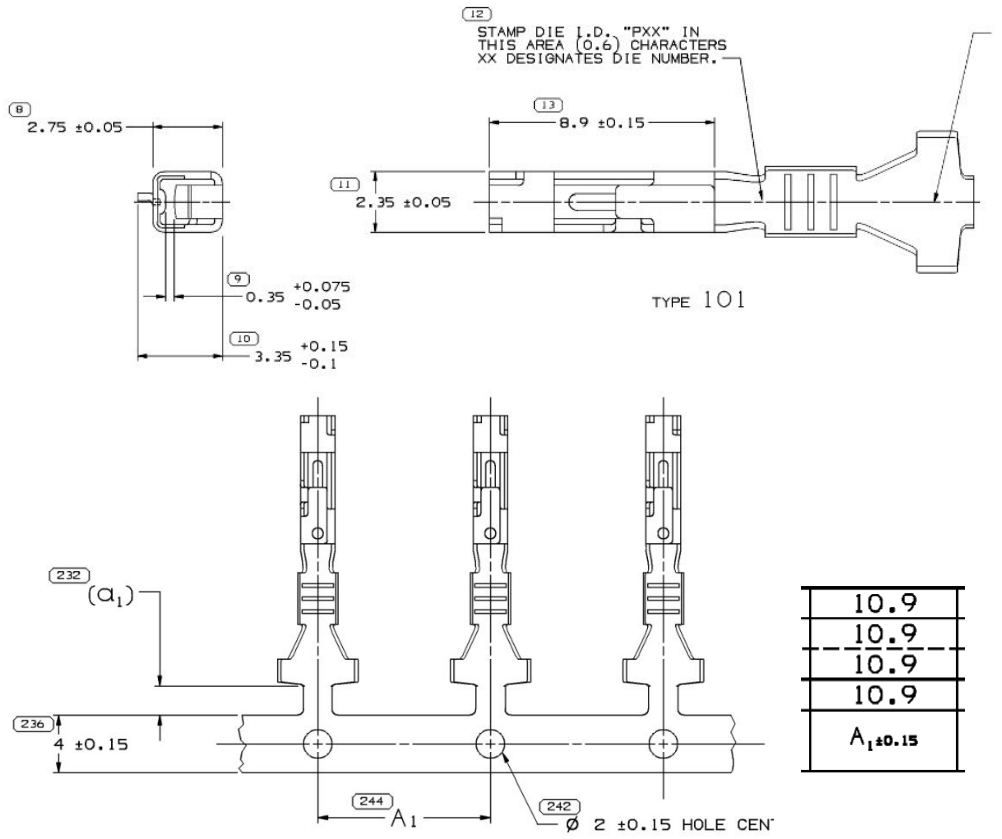

端子本体尺寸完全相同，唯一区别是端子绕盘间隔不同，一个是12mm，一个是10.9mm