DELPHI PACKARD ELECTRIC SYSTEMS
WARREN, OHIO 44486

DWG STATUS DATE	STG	REV	N/P	CHG	ZONE	REVISION HISTORY	AUTH	DR	CK	APVD
02AP04	R	01	--	--		10748124, 25, 26, 10779624, 12186637, 15327733 & 15340695 - WERE SEPARATE DWGS	253715	JFC	JFC	JEP
01JL04	R	02	--	--		15340695 - REVISED CHART	256531	EGA	JFC	JEP
18JA05	R	03	--	--		ALL PARTS - DWG UPDATED TO LATEST PRINT	263018	CGG	GOY	GOY

DRAWING NUMBER / ZEICH. NUMMER — REVISION INDEX — SHEET BLATT — APPROVAL LEVE GENEHMIGUNGSSTUFE
DRAWING ZEICHNUNG

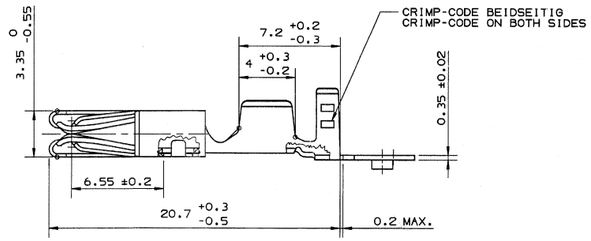

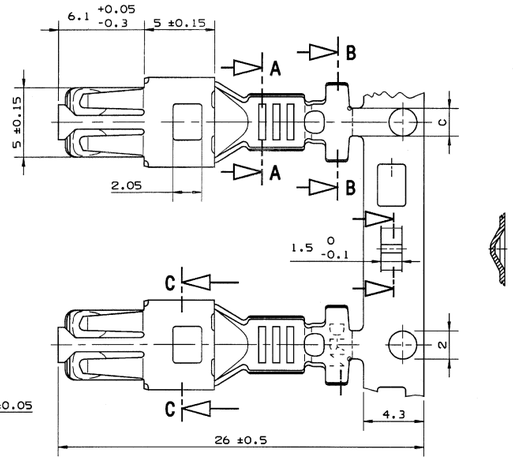

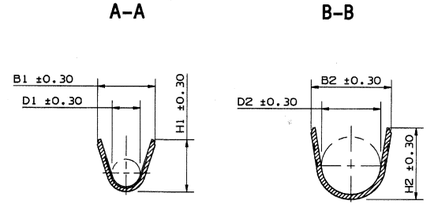

LIEFERZUSTAND

A00 Band von links nach rechts ablaufend

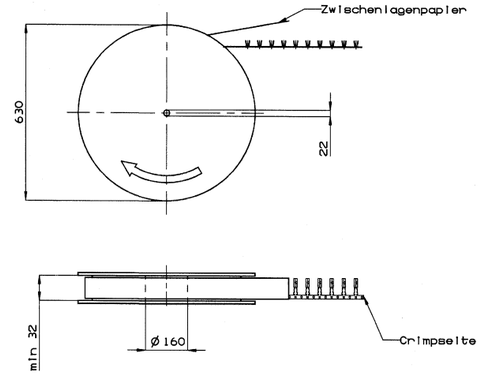

6 004 00 61	5mm²	IIII	2.40	5.50	3.40	5.30	6.80	5.10	6.20	SOCKET TERMINAL Cu Cr Si Ti (K75) STEEL SPRING X10 Cr Ni 18 8	Sn 1-4 µm TIN PLATE 0.001-0.004	9 084 08 00
6 004 00 51	>2.50 - 4.00 mm²	III	2.40	4.40	2.60	4.50	6.70	4.90	6.10			
6 004 00 41	>1.00 - 2.50 mm²	II	2.00	4.10	2.00	3.80	5.70	4.20	5.20			
6 004 00 31	0.50 - 1.00 mm²	I	2.00	3.20	1.60	3.20	4.70	3.30	4.60			
DRN-KONTAKT NR. / DRN-TERMINAL NO.	ANSCHLUSSBEREICH / WIRE SIZE	CRIMP-CODE	CRIMPBEREICHS-MASZE / CRIMP-AREA DIMENSIONS							WERKSTOFF / MATERIAL	OBERFLAECHE / SURFACE	CRIMPSPEZIFIKATION / CRIMPSPECIFICATION

ECN-NO.	DATE DD/MM/YY	REVISION INDEX	POSITION	CHANGE DESCRIPTION	DRAWN BY GEZ.	CHK. BY GEN.	APPR. BY GEN.
623/04	23.07.04	A00		Aufspulrichtung geaendert	wel		

PRODUCT SPEC. / PRODUCT SPECIFIK. — PACKAGING SPEC. / IMPLEMENTATION SPEC. / REPACKUNGS SPEZIFIK. / ANWENDUNGS SPEZIFIK.

THIS DRAWING AND ALL OTHER INFORMATION CONTAINED THEREIN IS PROPRIETARY AND THE PROPERTY OF FCI. This drawing may not be copied, reproduced or disclosed to any third party without the expressed written permission of FCI
Diese Zeichnung u. alle enthaltenen Informationen sind Eigentum von FCI. Diese Zeichnung darf weder kopiert, noch in irgend einer Form reproduziert, geoffenbart oder dritten ohne unsere ausdrückliche schriftliche Genehmigung zugänglich gemacht werden.
FCI April 1998

TOLERANCES ±0.1mm/±1.5° / TOLERANZEN — MATERIAL / MATERIAL — SURFACE FINISH / OBERFLAECHE — COUNTERPART Nr. / GEGENSTUECK Nr. — COLOUR / FARBE — DO NOT SCALE DRAWING / AUSDRUCK MASSSTABSGETREU — TOOL NO. / WERKZEUG Nr. — ECO Loc. Code / STANDORT CODE GN

	DATE / DATUM	NAME / NAME
DRAWN BY / GEZ.	28.9.98	ern
DESIGNED BY / GEZ.	28.9.98	ern
APPROVED BY / GEN.	28.9.98	ern

TITLE / BENENNUNG: DCS-FLACHKONTAKT 6.3 / DCS-FEM.TERMINAL 6.3

ESR NO. / ESR NUMMER — CAT. NO / KATALOG Nr. — DRAWING NUMBER / ZEICHN. NUMMER: 6 004 00 31/41/51/61 — FILE NAME / DATEI NAME

ISO PROJECTION / ISO PROJEKTION — DIMENSIONS IN MILLIMETERS / MASSSTAB IN MILLIMETERN — CAD SYSTEM / CAD GRAPHICS — CMD SIZE format A2 — SCALE / MASSST. 5:1 — SHEET / BLATT 1 of / von 1

NOTES

1. REF FRAMATOME P/N SEE CHART
2. DELPHI PACKARD ELECTRIC SYSTEMS IS NOT RESPONSIBLE FOR DESIGN CONTROL OF PURCHASED "OFF SHELF" COMPONENTS.
3. (*) DENOTES PART THAT IS CANDIDATE TO CANCELLATION

	PART NO.	REV	N/P	STATUS	REF FRAMATOME P/N	REPLACED BY	MATERIAL	PLATING	GAUGE
	15340695	01	AC		6 004 00 41	-	CU CR SI TI K 75	TIN	1.00 - 2.50
*	15327733	01	AB		6 004 00 51	10748126	CU CR SI TI K 75	TIN	2.50 - 4.00
	12186637	01	AB		6 004 00 31	-	CU CR SI TI K 75	TIN	0.5 - 1.00
	10779624	01	AB		6 004 00 61	-	CU CR SI TI K 75	TIN	5.00
	10748126	01	AB		6 004 00 51	-	CU CR SI TI K 75	TIN	2.50 - 4.00
*	10748125	01	AB		6 004 00 41	15340695	CU CR SI TI K 75	TIN	1.00 - 2.50
*	10748124	01	AB		6 004 00 31	12186637	CU CR SI TI K 75	TIN	0.5 - 1.00

DGW TYPE: PART DRAWING — STYLE: N/A — VOLUME (CM³): N/A — DISTR CODE: D — REFERENCE — DO NOT SCALE — CAD SE EDGE EDGE

DELPHI
DELPHI PACKARD ELECTRIC SYSTEMS WARREN, OH

	DATE
DR:	
APVD1: Corral, Jose F.	02AP04
APVD2: Corral, Jose F.	02AP04
APVD3: Enriquez Puentes, Jorge	04AP04
APVD4:	
APVD5:	

SUBSTANCES OF CONCERN AND RECYCLED CONTENT PER DELPHI - A 10949001

MATERIAL: SEE DWG

DRAWING NAME: TAXI TERM F SLD

DRAWING NUMBER: 15491588

SIZE	SCALE	FRAME NO	SHEET NO	STG	REV	N/P
A0	NONE	1 OF 1	1 OF 1	R	03	--