D-Sub Pressfit Connectors

Amphenol's FCI D-Sub connectors are part of an industry standard for applications requiring robust and reliable connectors. These proven D-Sub connectors are one of the most popular Input/Output interconnects, addressing a wide variety of applications in Telecommunications, Data, Consumer Industrial, Military, Instrumentation and Medical. Since many years Amphenol FCI has been offering a wide range of D-Sub connectorsto meet various design requirements including those in harsh environment.

Amphenol offers Standard density and Mixed power connectors in press fit termination. In SMT (Surface Mount Technology) manufacturing process, this Press-fit series connectors help to save the cost of an additional wave soldering. The "eye of the needle" termination combined with a special flat rock design (easy application by pressure on insulator) make this product line very attractive.



TARGET MARKETS



FEATURES

- Connectors are press-fitted into the PCB
- Flat rock contact design
- Eye of the needle termination
- Same connectors are compatible with PCB thicknesses of 1.6mm and 2.4mm
- Solder less board locking
- Press-fit boardlocks

BENEFITS

- Saves wave soldering cost
- Easy to mount
- Ensures retention in PCB
- Flexibility in application
- Solder less grounding
- Provides additional mechanical strength

RIGHT ANGLE PRESS FIT

UL RECOGNISED FILE E66906



ORDERING INFORMATION

D	25	P	82C	4	PA	00LF

Series:

Number of Contacts
09
15
25
37
50*

Contacts	
Pin	P
Socket	S

Durability	
Standard class (≥200 mating/unmating)	4
High performance class (≥500 mating/unmating)	6

Mouting Options	
Standard hole	PA
Threaded insert M3	PL
Threaded insert UNC 4-40	PX ✓
Female screw UNC 4-40	PV ✓
Harpoons + insert M3	GL
Harpoons + insert UNC 4-40	GX
Harpoons + female screw UNC 4-40	GV

RoHS Status	
Standard, RoHS compatible	00LF ✓

Termination		
Type	Footprint/Pitch	Code
Eurostyle	9.4/2.54 – 9 to 37 way 10.3/2.54 – 50 way	82C ✓
US standard	8.08/2.84 – 9 to 37 way	80C
Europe standard*	10.4/2.54 – 9 to 37 way	81C

*Only for Eurostyle version Preferred Option ✓

Disclaimer
Please note that the above information is subject to change without notice.

D-Sub Pressfit Connectors

SPECIFIC DIMENSIONS

Eurostyle (82 C) 9-37 way

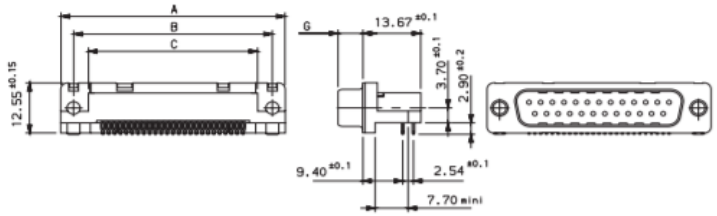

50 way

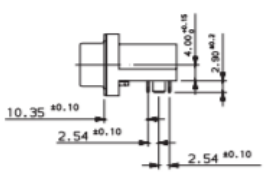

US Standard (80 C)

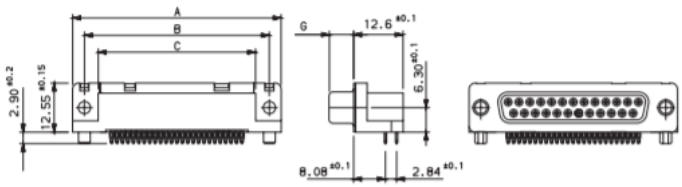

Europe Standard (81 C)

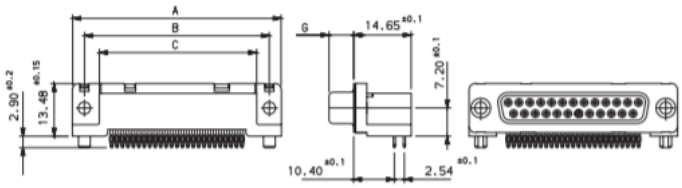

		A ±0,38	B ±0,12	C ±0,10	G -0/+0.25
09	P	30.81	24.99	16.96	5.90 -0/+0.15
	S	30.81	24.99	16.96	6.05
15	P	39.14	33.32	25.18	5.90 -0/+0.15
	S	39.14	33.32	25.18	6.05
27	P	53.03	47.04	39.12	5.70
	S	53.03	47.04	39.12	6.05
37	P	69.32	63.50	55.68	5.70
	S	69.32	63.50	55.68	6.05
50*	P	67.10	61.11	54.10	5.70
	S	67.10	61.11	54.10	6.05

*Only for Eurostyle version Preferred Option

SPECIFIC DIMENSIONS

- Application by pressure on insulator
- D-Sub insertion kit: 8646 3064 01
- Eye of the needle design

METALLIZED HOLE DIMENSIONS

			Press-fit Contacts	Press-fit Harpoons
PCB hole definition (note 1 and 2)		Drill diameter	Ø 1.15 ref (note 3)	Ø 3.22 ref (note 3)
		Drilled hole	Ø 1.18 – 1.2	Ø 3.19 – 3.25
		Copper plating	25µm min. (recommended 50µ max.)	25µm min. (recommended 50µ max.)
	non RoHS	Tin-lead plating	15µm max. (recommended 5µ min.)	15µm max. (recommended 5µ min.)
		Finish hole (after reflow)	Ø 0.94 – 1.09	Ø 3.02- 3.20
	RoHS	Tin plating	0.8 to 1.2µm	0.8 to 1.2µm
		Finish hole (after reflow)	Ø 1.00 – 1.09	Ø 3.08 – 3.20

Note 1: These dimensions must be respected to ensure press-fit pin performance
Note 2: According to IEC-352-S specification
Note 3: Vital requirement for press-fit pin performance

PRESS-FIT PERFORMANCE

	Press-fit Contacts	Press-fit Harpoons
Insertion force	≤100 N	≤120 N
Extraction force	≥30 N	≥30 N

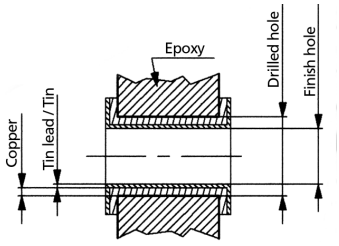

Disclaimer
Please note that the above information is subject to change without notice.

STRAIGHT PRESS-FIT

UL RECOGNISED FILE E E66906

- This new Press-fit connectors eliminate soldering process and saves cost
- Compatible with PCB thicknesses of 1.60 mm & 2.40 mm
- The "eye of the needle" termination combined with a special flat rock design (easy application by pressure on insulator) make this product line very attractive



ORDERING INFORMATION

D	25	P	91C	4	PA	00LF

Series

Number of Contacts

09
15
25
37
50

Contacts

Pin	P
Socket	S

Durability

Standard class ≥200 mating/ unmating	4
High performance mating/unmating)	6

Mouting Options

Standard hole	PA
Threaded insert M3	PL
Threaded insert UNC 4-40	PX ✓
Female screw UNC 4-40	PV ✓
Harpoons + insert M3 + elec. continuity	GL
Harpoons + insert UNC 4-40 + elec. continuity	GX
Harpoons + female screw UNC 4-40 + elec. continuity	GV

RoHS Status

Standard, RoHS compatible	00LF ✓

Termination Type

Type	Code
Press-fit suitable for PCB thickness 1.6mm & 2.4mm – Europe Standard	91C
Press-fit suitable for PCB thickness 1.6mm & 2.4mm – Low Profile	90C

Preferred Option ✓

Disclaimer
Please note that the above information is subject to change without notice.

D-Sub Pressfit Connectors

SPECIFIC DIMENSIONS

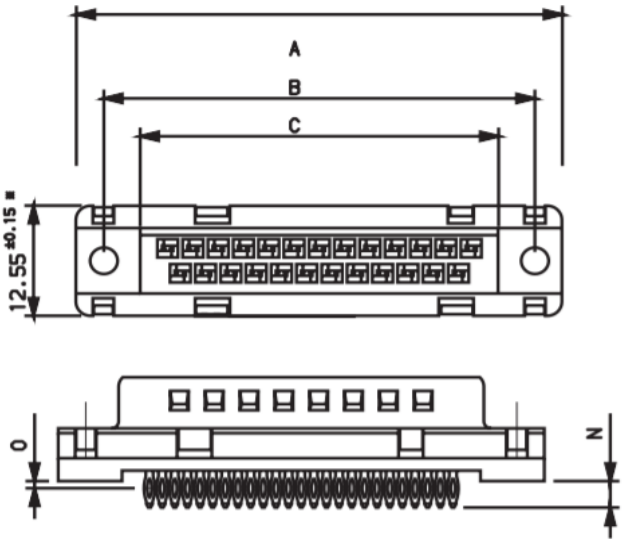

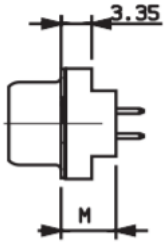

*For 50 contacts: 15.34 ± 0.15
For other dimensions, consult us

Size	A ±0,38	B ±0,12	C ±0,10
09	30.81	24.99	16.96
15	39.14	33.32	25.18
25	53.03	47.04	39.12
37	69.32	63.50	55.68
50	66.93	61.11	53.11

Termination Type	M ±0.3	N ±0.3	O ±0.2
90C	5.60	3.40	1.20
91C	6.00	3.00	0.80

PRESS-FIT FEATURES

- Application by pressure on insulator
- D-Sub insertion kit: 8646 3064 01
- Eye of the needle design

METALLIZED HOLE DIMENSIONS

			Press-fit Contacts	Press-fit Harpoons
P.C.B hole definition (note 1 and 2)		Drill diameter	Ø 1.15 ref (note 3)	Ø 3.22 ref (note 3)
		Drilled hole	Ø 1.18 – 1.2	Ø 3.19 – 3.25
		Copper plating	25µm min. (recommended 50µ max.)	25µm min. (recommended 50µ max.)
	non RoHS	Tin-lead plating	15µm max. (recommended 5µ min.)	15µm max. (recommended 5µ min.)
		Finish hole (after reflow)	Ø 0.94 – 1.09	Ø 3.02– 3.20
	RoHS	Tin plating	0.8 to 1.2µm	0.8 to 1.2µm
		Finish hole (after reflow)	Ø 1.00 – 1.09	Ø 3.08 – 3.20

Note 1: These dimensions must be respected to ensure press-fit pin performance
Note 2: According to IEC-352-S specification
Note 3: Vital requirement for press-fit pin performance

PRESS-FIT PERFORMANCE

	Press-fit Contacts	Press-fit Harpoons
Insertion force	≤100 N	≤120 N
Extraction force	≥30 N	≥30 N

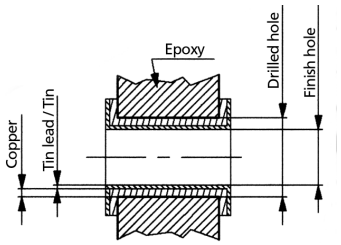

Disclaimer
Please note that the above information is subject to change without notice.

D-Sub Pressfit Connectors

FULL POWER RIGHT ANGLE AND STRAIGHT PRESS-FIT

UL RECOGNISED FILE E66906

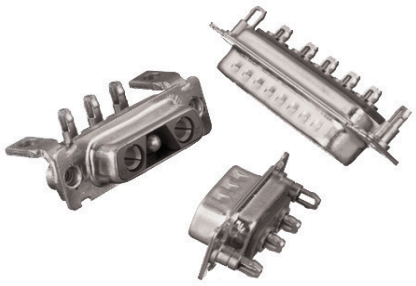

ORDERING INFORMATION

D	E	L	2 V 2 3 V 3 3 W 3 5 W 5 8 W 8	P	93C	5	G	40LF
Series	Shell Size (tin plated): E, A, B, C		Layouts					

Front Accessory					
	Blank	L	O	I	V
Straight version		X	X		X
Right angled	X	X	X		X

X: Available
Blank: without accessory
L: Threaded insert M3
O: Threaded insert UNC 4-40
I: Female screw UNC M3
V: Female screw UNC 4-40





Contacts	
Pin	P
Socket	S

Termination Type	
Straight version	93C
Right angled / Europe standard	81C
Right angled / US standard (5W1, 9W4 non available)	80C

Durability	
200 mating/unmating	5
500 mating/unmating	6

Power Contacts	
Fitted with power contacts 30A RoHS compatible	30LF
Fitted with power contacts 40A RoHS compatible	40LF

PCB Accessory			
	M	G	A
Straight version		X	
Right angled	X		X

X: Available
A: Without accessory
G: Harpoon used for PCB thickness from 1.6mm
M: Metal brackets without harpoon

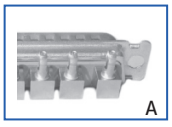



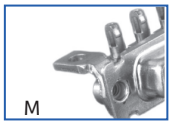

Disclaimer
Please note that the above information is subject to change without notice.

SPECIFIC DIMENSIONS

METALIZED HOLE DIMENSIONS

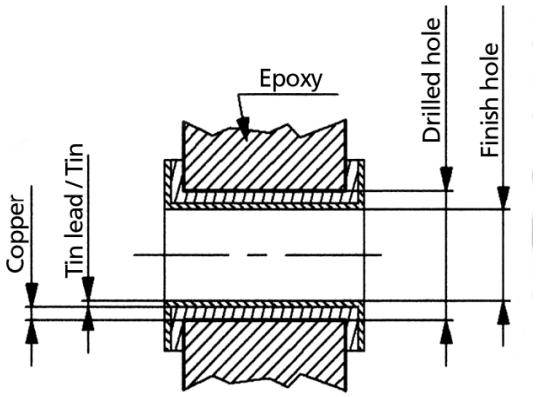

Termination Type			Press-fit Contacts	Press-fit Harpoons	
P.C.B hole definition (note 1 and 2		Drill diameter	Ø 3.22$^{\pm 0.03}$	Ø 3.22$^{\pm 0.03}$	Ø 3.22±0.03
		Drilled hole	Ø 3.19 – 3.25	Ø 3.19 – 3.25	
		Copper plating	25µm min. (recommended 50µ max.)	25µm min. (recommended 50µ max.)	
	non RoHS	Tin-lead plating	15µm max. (recommended 5µ min.)	15µm max. (recommended 5µ min.)	
		Finish hole (after reflow)	Ø 3.02 – 3.20	Ø 3.02 – 3.20	
	RoHS	Tin plating	0.8 to 1.2µm	0.8 to 1.2µm	
		Finish hole (after reflow)	Ø 3.08 – 3.20	Ø 3.08 – 3.20	

Note 1: These dimensions must be respected to ensure press-fit pin performance
Note 2: According to IEC-352-S specification
Note 3: Vital requirement for press-fit pin performance

PRESS-FIT PERFORMANCE

	Press-fit Contacts	Press-fit Harpoons
Insertion force	≤200 N (average insertion 160 N)	≤200 N (average insertion 160 N)
Extraction force	≥30 N	≥30 N

Disclaimer
Please note that the above information is subject to change without notice.

TECHNICAL INFORMATION

PHYSICAL CHARACTERISTICS

- Insulator Material: PBT color Black
- Contact Material: Phosphor Bronze
- Grounding Device Material: Brass
- Accessories: Brass

ELECTRICAL CHARACTERISTICS

- Maximum Rating Current: 5A at 20°C / 2.5A at 70°C
- Nominal Current: 5A (Standard conditions)
- Contact Resistance:
  - Straight terminations: <10mΩ
  - Right Angled Termination:
    - <25mΩ for 9 To 37 way
    - <35mΩ for 50 way
- Voltage Proof: >1000 V.r.m.s.
- Rated Voltage: 300 V.r.m.s.
- Insulation Resistance: >5000mΩ
- Creepage and Clearance Distance: >1mm
- Average Wiping Length: 2mm

MECHANICAL CHARACTERISTICS

- RETENTION AGAINST TORQUE:
  - Threaded insert: 0.7 N.m max. from front side
  - Threaded insert: 0.3 N.m max. from rear side
    0.25N.m min. from rear side
  - Insert L: Threaded M3
  - Insert X: Threaded UNC 4.40
  - Female Screw Lock: 0.5 N.m max. from front side
  - Female Screw V Threaded UNC 4.40
  - Female Screw I Threaded M3
- Insertion and Withdrawal Force: <n x 3.40 N (n number of cts)
- Gauge Retention Force: >0.20N (Gauge PM)
- Thickness Gauge Ø: 0.99±0.005 / Surface Roughness: Ra=0.10µ
  mini– 0.25µ maxi
- Contact Retention In Insulator:
  - Mini 16N for straight contact
  - Mini 20N for right angled contact
- Vibrations: 10–2000Hz / 1.5 mm – 20g /3 x 2 HRS
- Interruption: <1µs (Not applicable for PL3)
- Shock: ACC. HALF SINE 50g– 11m.s–6x3 Shocks
- Interruption: <1µs

PACKAGING

- Tray & Bulk pack (jack connectors, plug connector components)
- Tape & Reel (right angle Pin–in–Paste jack connectors)
- Single Kit (plug connector components)
- Carton (cable assemblies)

TARGET MARKETS/APPLICATIONS



Asymmetric Digital Subscriber Line (ADSL)
Base Station
Switching
Transmission



Set–top Box



Desktop and Laptop
Storage System
Router and Server



Automotive Diagnostics
Control Drives
Energy Meter
Gaming Machine
Test Equipment
Office Automation
POS & Handheld terminal
Power Supplies
Parking Meter
Printer and Copier
Renewable Energy
Robotics
Surveillance Camera
Avionics



Medical Instrument



Military Equipment

ACPADSUBPFC0324EA4

Disclaimer
Please note that the above information is subject to change without notice.