Amphenol

D-Subminiature Product Catalog







INTRODUCTION

ABOUT US

Amphenol ICC, a division of Amphenol, is a world leader providing interconnect solutions for the Information, Communications and Commercial electronics markets.

D–SUB CONNECTORS

With a broad array of configurable options, D–Sub connectors are one of the most popular interconnect products in the market today. Suitable for thousands of applications across market segments like Industrial & Instrumentation, Mobile Networks, IT/DataCom, Medical and Mil–Aero, Amphenol's D–Sub family meet all your performance and quality requirements. With advanced engineering and fast prototyping, we assure the shortest lead time for both regular and customized solutions.

Signal, power, hybrid, and rugged, we have the D–Subs that exactly match your design requirements, along with a wide choice of complementing accessories.

Our continuous improvement program is focused on manufacturing through process control, reaching high quality levels with ISO 9001 Certification, and meeting advanced application needs with innovation.

Disclaimer
Please note that the above information is subject to change without notice.

Table of Contents

06

D-Sub Standard Board Mount Connectors

15

D-Sub Slimline

17

D-Sub Cable Connectors

26

D-Sub High Density Connectors

37

D-Sub Pin-in-Paste Connectors

43

D-Sub Pressfit Connectors

51

D-Sub Mixed and Full Power DW Series

63

D-Sub Military Products - DM Series

74

D-Sub Accessories

97

MDBR Series Rugged D-Subminiature Connectors

Series	Delta D Solder to board	Delta D Press-fit	Delta D Pin-in-Paste	Mixed Power DW	D series	8656 series
	7 - 10	44 - 47	39 - 42	21 & 57	11 & 18	19
ENVIRONMENTAL CHARACTERISTICS						
Operating temperature range	-55°C to 125°C	-55°C to 125°C	-55°C to 125°C	-55°C to 125°C	-55°C to 125°C	-55°C to 105°C
Salt spray	24 hours	24 hours	24 hours	24 hours	24 hours	24 hours
Damp heat	21 days	21 days	21 days	21 days	21 days	21 days
Proof version	no	no	no	no	no	no
UL 94 VO	E66906	E66906	E66906	E66906	E66906	E66906
NORMES AND APPROVALS						
NFC 93425				compliance with HE 507		in compliance with
DIN 41652	in compliance with	in compliance with	In compliance with		in compliance with	in compliance with
Others	LNZ 4404					
MATERIAL						
Shell	Steel	Steel	Ni	Steel	Steel	Steel
Insulator	Thermoplastic	Thermoplastic	Thermoplastic	Thermoplastic	Thermoplastic	Thermoplastic
Contacts	Copper alloy	Copper alloy	Copper alloy	Copper alloy	Copper alloy	Copper alloy
STANDARD PLATING						
Shell	Tin	Tin	Tin	Tin	Tin	Tin
Contact active area termination area	Gold over Nickel Tin over Nickel	Gold over Nickel Tin over Nickel	Gold over Nickel Tin over Nickel	Gold over Nickel Tin over Nickel	Gold over Nickel Tin over Nickel	Gold over Nickel Tin over Nickel
ELECTRICAL CHARACTERISTICS						
Max current rating per contact	5 A	5 A	5 A	7.5 A (signal contact) 40 A (power contact)	5 A	5 A
Dieletric withstanding voltage (DWV)	1000 Vrms	1000 Vrms	1000 Vrms	1000 Vrms	1000 Vrms	1000 Vrms
Rated voltage	300 Vrms	300 Vrms	300 Vrms	300 Vrms	300 Vrms	300 Vrms
Insulation resistance	≥ 5000 MΩ	≥ 5000 MΩ	≥ 5000 MΩ	≥ 5000 MΩ	≥ 5000 MΩ	≥ 5000 MΩ
Contact resistance	≤ 10 mΩ *	≤ 10 mΩ *	≤ 10 mΩ *	≤ 7.3 mΩ	≤ 10 mΩ *	≤ 10 mΩ *
Insertion / Extraction force per contact (N)	5N Max. / 0.3N min.	5N Max. / 0.3N min.	5N Max. / 0.3N min.	5N Max. / 0.3N min.	5N Max. / 0.3N min.	5N Max. / 0.3N min.
MECHANICAL AND DIMENSIONAL CHARACTERISTICS						
Mating / Unmating cycles	200 min.	200 min.	500 min.	500 min.	200 min.	200 min.
Contact diameter on active area	1 mm	1 mm	1 mm	3.6 mm (power contact) 1 mm (signal contact)	1 mm	1 mm
Removable contacts	no	no	no	yes (cable)	no	yes
WIRE						
Size				AWG 20 Max. (signal contact) other see page 35	AWG 20 Max.	AWG 20 Max.
Max diameter on insulator				—	2.1 mm	1.52 mm
LAYOUT						
Number of contacts	9, 15, 25, 37, 50* Male and Female	9, 15, 25, 37, 50 Male and Female	9, 15, 25, 37*, 50* Male and Female	9, 15, 25, 37, 50* Male and Female	9, 15, 25, 37, 50 Male and Female	9, 15, 25, 37, 50 Male and Female

* Straight version only

Series	Compact D high density	DP series	DM HE 501 / HE 508	DMW HE 507
	32	12	64 - 67	68
ENVIRONMENTAL CHARACTERISTICS				
Operating temperature range	-55°C to 125°C	-55°C to 125°C	-55°C to 125°C -55°C to 155°C	-55°C to 125°C
Salt spray	24 hours	24 hours	48 hours	48 hours
Damp heat	21 days	21 days	56 days	56 days
Proof version	no	no	no	no
UL 94 VO	E66906	E66906	E66906	E66906
NORMES AND APPROVALS				
NFC 93425		in compliance with		
DIN 41652		in compliance with	—	—
Others			LNZ 4404	
Shell	Steel	Steel	Steel	Steel
MATERIAL				
Insulator	Thermoplastic	Thermoplastic	Thermoplastic/Thermoset	Thermoplastic/Thermoset
Contacts	Copper alloy	Copper alloy	Copper alloy	Copper alloy
STANDARD PLATING				
Shell	Tin	Tin	Cadmium	Cadmium
Contact active area termination area	Gold over Nickel Tin over Nickel	Gold over Nickel Tin over Nickel	Gold over Nickel Tin/Gold over Nickel	Gold over Nickel Tin/Gold over Nickel
ELECTRICAL CHARACTERISTICS				
Max current rating per contact	2.5 A	7.5 A	7.5 A	7.5 A (signal contact) 40 A (power contact)
Dieletric withstanding voltage (DWV)	1000 Vrms	1000 Vrms	1000 Vrms	1000 Vrms
Rated voltage	300 Vrms	300 Vrms	300 Vrms	300 Vrms
Insulation resistance	≥ 5000 MΩ	≥ 5000 MΩ	≥ 5000 MΩ	≥ 5000 MΩ
Contact resistance	≤ 25 mΩ *	≤ 7.3 mΩ	≤ 7.3 mΩ	≤ 7.3 mΩ
Insertion / Extraction force per contact (N)	5N Max. / 0.3N min.	5N Max. / 0.3N min.	5N Max. / 0.3N min.	5N Max. / 0.3N min.
MECHANICAL AND DIMENSIONAL CHARACTERISTICS				
Mating / Unmating cycles	200 min.	200 min.	500	500
Contact diameter on active area	0.76 mm	1 mm	1 mm	1 mm (signal contact)
Removable contacts	no	no	no	yes (coax and power)
WIRE				
Size		AWG 20 Max.	AWG 20	AWG 20 (signal contact) (other see page 36)
Max diameter on insulator		2.1 mm	2.1 mm	2.1 mm
LAYOUT				
Number of contacts	Solder : 15, 26, 44, 62 Press-fit: 62, 78	9, 15, 25, 37, 50 Male and Female	9, 15, 25, 37, 50 Male and Female	9, 15, 25, 37, 50 Male and Female

D-Sub Standard Board Mount Connectors

Amphenol's FCI D-Sub connectors are part of an industry standard for applications requiring robust and reliable connectors. These proven D-Sub connectors are one of the most popular Input/Output interconnects, addressing a wide variety of applications in Telecommunications, Data, Consumer Industrial, Military, Instrumentation and Medical. Since many years Amphenol FCI has been offering a wide range of D-Sub connectorsto meet various design requirements including those in harsh environment.

The standard density D-Sub series are widely used for numerous applications in many market segments. Amphenol FCI offers Delta-D (single shell design) and Frugal-D (two shell design) under this category. Standard density D-Sub PCB mount connectors available in straight and angled version. They come with a large number of mounting options.



TARGET MARKETS



FEATURES

- A Basic I/O connector comes with five shell size and housing design
- Has a D-shaped shell design
- Meets DIN 41652 and MIL-C-24308 dimensional standards
- Available in Straight, Angle, Wire Wrap terminations
- Delta-D design (1 shell + 1 housing) with stamped & formed contacts
- Various PCB and Panel mounting accessory options available
- Lead-free and RoHS compliant

BENEFITS

- Most popular Rugged and sturdy I/O connector
- Supports the need for polarisation
- Interchangable and intermateable with other makes
- Support different PCB mounting requirements
- Price competitive
- Wide variety of choices for secure connection
- Meets environmental, health and safety requirements

RIGHT ANGLE SOLDER TO BOARD

UL RECOGNISED FILE E66906

- In compliance with DIN 41652

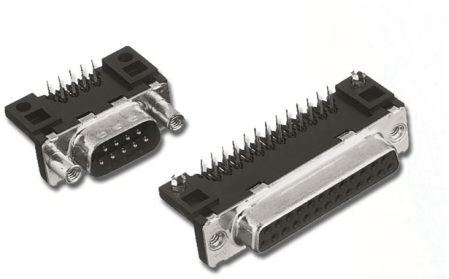

ORDERING INFORMATION

D	25	P	13A	4	GV	00LF

Series:

Number of Contacts

09
15
25
37

Contacts

Pin	P
Socket	S

Durability

Standard class (≥200 mating/unmating)	4
High performance class (≥500 mating/unmating)	6

RoHS Status

Standard, RoHS compatible	00LF

Mouting Options

Standard hole	PA	
Threaded insert M3	PL	
Threaded insert UNC 4-40	PX	
Female screw UNC 4-40	PV	
Harpoons + insert M3 + elec. continuity	GL	
Harpoons + insert UNC 4-40 + elec. continuity	GX	✓
Harpoons + female screw UNC 4-40+ elec. continuity	GV	✓
Harpoons + female screw M3 + elec. continuity	GI	
Elec. continuity	UA	
Insert M3 + elec. continuity	UL	
Insert UNC 4-40 + elec. continuity	UX	
Female screw UNC 4-40 + elec. continuity	UV	

Termination				Code	
Type	Footprint/ Pitch	Length of Termination	PCB Thickness		
Right angled – Europe standard	10.4/ 2.54mm	2.90	1.6	13A	✓
Right angled – Europe standard	10.4/ 2.54mm	3.70	2.4 and 1.6	13B	
Right angled – Europe standard	10.4/ 2.84mm	2.90	1.6	23A	
Right angled – Europe standard	10.4/ 2.84mm	3.70	2.4 and 1.6	23B	
Right angled – US standard	8.08/ 2.84mm	3.18	1.6	33E	✓

Disclaimer
Please note that the above information is subject to change without notice.

SPECIFIC DIMENSIONS

EUROPE STANDARD

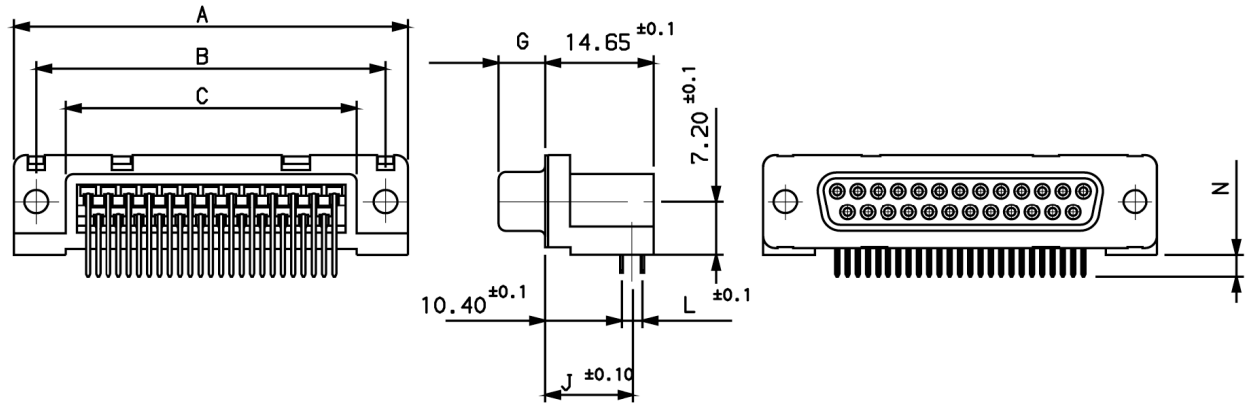

US STANDARD

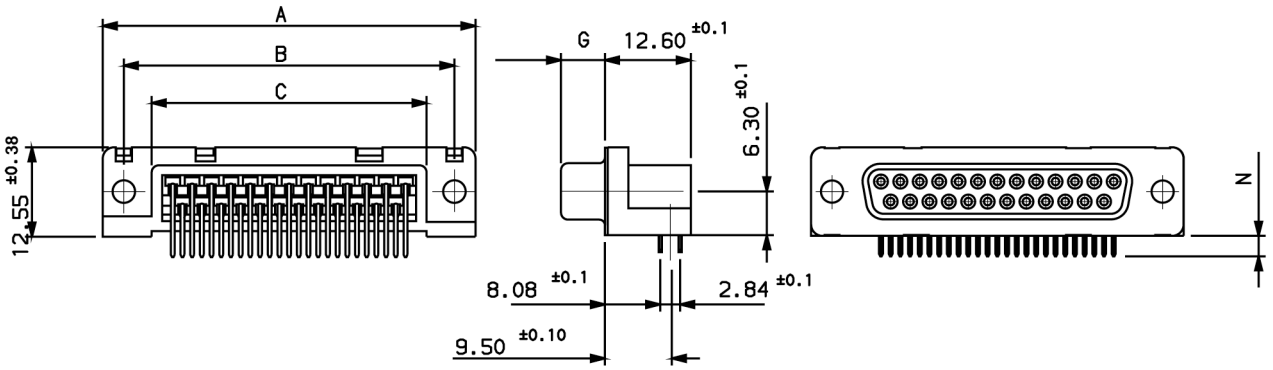

		A ±0,38	B ±0,12	C ±0,10	G -0/+0.25	J ±0,10		L ±0,10		N ±0,30		
						Termination		Termination		Termination Length		
						13	23	13	23	I3A 23A	I3B 23B	33E
09	P	30.81	24.99	16.96	5.90 -0/+0.15	11.67	11.82	2.54	2.84	2.90	3.70	3.18
	S	30.81	24.99	16.96	6.05	11.67	11.82	2.54	2.84	2.90	3.70	3.18
15	P	39.14	33.32	25.18	5.90 -0/+0.15	11.67	11.82	2.54	2.84	2.90	3.70	3.18
	S	39.14	33.32	25.18	6.05	11.67	11.82	2.54	2.84	2.90	3.70	3.18
25	P	53.03	47.04	39.12	5.70	11.67	11.82	2.54	2.84	2.90	3.70	3.18
	S	53.03	47.04	39.12	6.05	11.67	11.82	2.54	2.84	2.90	3.70	3.18
37	P	69.32	63.50	55.68	5.70	11.67	11.82	2.54	2.84	2.90	3.70	3.18
	S	69.32	63.50	55.68	6.05	11.67	11.82	2.54	2.84	2.90	3.70	3.18

Dimensions in mm

Disclaimer
Please note that the above information is subject to change without notice.

STRAIGHT SOLDER TO BOARD

UL RECOGNISED FILE E66906

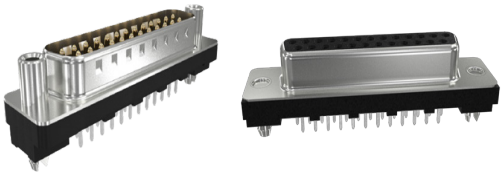

ORDERING INFORMATION

D	25	P	24A	4	GV	00LF

00LF: Standard series, RoHS compatible

D: Serie

Number of Contacts

09
15
25
37
50

Contacts

Pin	P
Socket	S

Mouting Options

Standard hole	PA
Threaded insert M3	PL
Threaded insert UNC 4-40	PX
Female screw UNC 4-40	PV
Harpoons + insert M3 + elec. continuity	GL
Harpoons + insert UNC 4-40 + elec. continuity	GX
Harpoons + female screw UNC 4-40 + elec. continuit	GV ✓

Durability

Standard class (≥200 mating/ unmating	4
High performance class (≥500 mating/unmating)	6

Termination Type

Type	Footprint/ Pitch	Termination Length	PCB Thickness	Code
Straight version (low profile)	5.6/2.84mm	2.90	1.6mm	14A
Straight version	6/2.84mm	2.90	1.6mm	24A ✓
Straight version	6/2.84mm	3.70	2.4mm	24B
Straight version	6.9/2.84mm	2.90	1.6mm	34A

Preferred Option ✓

Disclaimer
Please note that the above information is subject to change without notice.

SPECIFIC DIMENSIONS

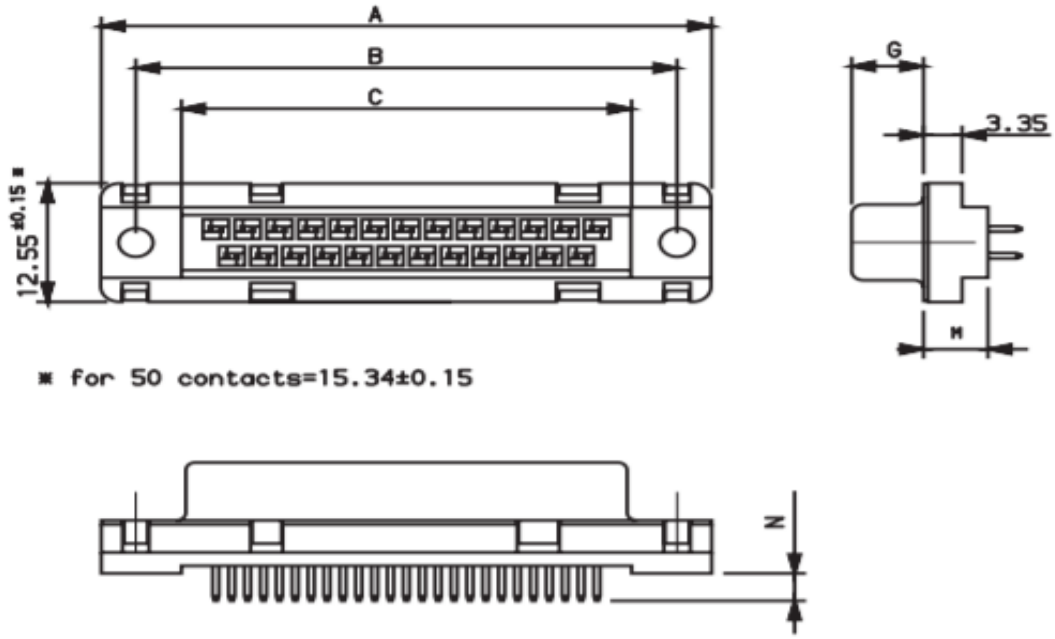

Dimensions										
		$A^{\pm 0,38}$	$B^{\pm 0,12}$	$C^{\pm 0,10}$	$G^{-0/+0.25}$	$M^{\pm 0,10}$			$N^{\pm 0,30}$	
						Terminal			Terminal Length	
						14	24	34	14A 24A 34A	24B
09	P	30.81	24.99	16.96	5.90 $^{-0/+0.15}$	5.60	6.00	6.90	2.90	3.70
	S	30.81	24.99	16.96	6.05	5.60	6.00	6.90	2.90	3.70
15	P	39.14	33.32	25.18	5.90$^{-0/+0.15}$	5.60	6.00	6.90	2.90	3.70
	S	39.14	33.32	25.18	6.05	5.60	6.00	6.90	2.90	3.70
25	P	53.03	47.04	39.12	5.70	5.60	6.00	6.90	2.90	3.70
	S	53.03	47.04	39.12	6.05	5.60	6.00	6.90	2.90	3.70
37	P	69.32	63.50	55.68	5.70	5.60	6.00	6.90	2.90	3.70
	S	69.32	63.50	55.68	6.05	5.60	6.00	6.90	2.90	3.70
50	P	67.10	61.11	54.11	5.70	5.60	6.00	6.90	2.90	3.70
	S	67.10	61.11	54.11	6.05	5.60	6.00	6.90	2.90	3.70

Dimensions in mm

Disclaimer
Please note that the above information is subject to change without notice.

STAMPED AND ROLLED CONTACTS

UL RECOGNISED FILE E 66906

D series is the standard D–Sub full metal shell version with stamped contacts. This design is basically proposed in straight and angled version without accessories





PART NUMBER SELECTOR

D	E		09	P	5	64	C	T	X	LF
SERIES	SHELL SIZE	LOCKING ACCESSORIES	TOTAL CONTACTS	CONTACTS TYPE	TERMINATION TYPE	MATING CYCLES	TERMINATION TYPE	SHELL PLATING	DIMPLES	LEAD–FREE

SERIES
D

SHELL SIZE
E
A
B
C
D

LOCKING ACCESSORIES	
Blank	Standard
L	Threaded Insert M3
O	Threaded Insert UNC 4–40
V	Female screw (Hexagonal) UNC 4–40

TOTAL CONTACTS
09
15
25
37
50

CONTACTS TYPE	
Pin	P
Socket	S

TERMINATION TYPE	
Straight	3
Right Angle (Foot Print/Pitch: 10.40/2.54mm)	5

Stamped contacts

MATING CYCLES	
≥200	64
≥500	65

TERMINATION TYPE	
Standard tin plating	T

SHELL PLATING	
Standard on male connector only	X

LEAD–FREE
LF

Straight Spills	Angled Spills	Index
Without accessory	Two plastic brackets*	–
–	Without bracket	C
–	Two metal brackets	M
Harpoons (Compulsory with option L or V)	Harpoons	G

*Except 50 pos with monobloc plastic brackets

SPECIFIC DIMENSIONS

Straight Spills

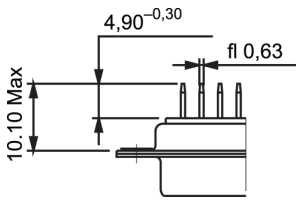

Right Angle Spills

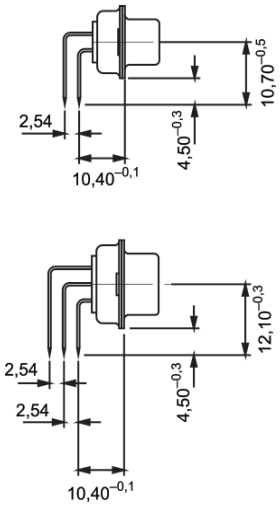

Disclaimer
Please note that the above information is subject to change without notice.

MACHINED CONTACTS

UL RECOGNISED FILE E 66906

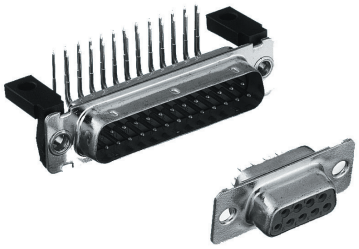

• DP series is designed for high performance applications, particularly in the field of telecommunications: data transmission, private automatic branch switching, telecom (LNZ listed)

• It features machined contacts and is available with straight spills, angled spills, and wire wrap terminations

PART NUMBER SELECTOR

D	E	P		09	P	5	64	C	T	X	LF
SERIES	SHELL SIZE	P	FRONT ACCESSORIES	NO. OF CONTACTS	CONTACTS	TERMINATION TYPE	MATING CYCLES	PCB ACCESSORIES	SHELL PLATING	DIMPLES	LEAD–FREE

SERIES: D

SHELL SIZE: E, A, B, C, D

P: Characterisation of DP series

FRONT ACCESSORIES:

Standard mounting hole (Ø = 3.10)	Blank
Threaded insert M3	L
Female screw locks UNC 4–40	V
Spacers (straight spills only)	S

NO. OF CONTACTS: 09, 15, 25, 37, 50

CONTACTS:

Pin	P
Socket	S

TERMINATION TYPE:

Straight spills	3
Angled spills– 2.54mm between rows	5
Wire wrap (3 levels)	4

MATING CYCLES:

≥200	64
≥500	65

PCB ACCESSORIES:

Straight Spills	Angled Spills	Wire Wrap	Index
Without accessory	Two plastic brackets*	–	–
–	Without bracket	–	C
–	Two metal brackets	–	M
Harpoons (Compulsory with option L or V)	Harpoons (9 to 37 ways only)	–	G

*Except 50 pos. with monobloc plastic brackets

SHELL PLATING:

Standard tin plated	T

DIMPLES:

Standard on male connector only	X

LEAD–FREE: LF

Disclaimer
Please note that the above information is subject to change without notice.

SPECIFIC DIMENSIONS

Wire Wrap

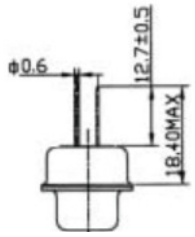

Right Angle Spills

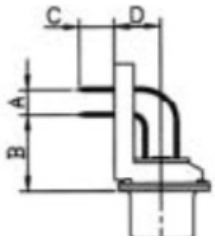

Straight Spills

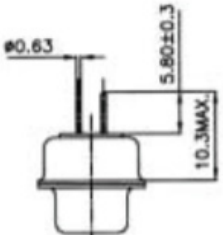

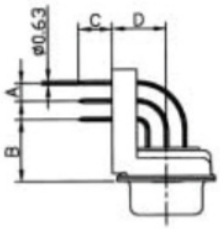

Dimension		Termination Code
		5
A		2.54
$B^{\pm 0.1}$		10.30
$C^{\pm 0.5}$		4.00
$D^{\pm 0.19}$	9 to 37 contacts	7.20
	50 contacts	8.60

Disclaimer
Please note that the above information is subject to change without notice.

TARGET MARKETS/APPLICATIONS



Asymmetric Digital Subscriber Line (ADSL)
Base Station
Switching
Transmission



Set–top Box



Desktop and Laptop
Storage System
Router and Server



Automotive Diagnostics
Control Drives
Energy Meter
Gaming Machine
Test Equipment
Office Automation
POS & Handheld terminal
Power Supplies
Parking Meter
Printer and Copier
Renewable Energy
Robotics
Surveillance Camera
Avionics



Medical Instrument



Military Equipment

Disclaimer
Please note that the above information is subject to change without notice.

D–Sub Slimline

ULTRA SLIM D–SUB CONNECTORS

Amphenol FCI has expanded the D–Sub connectors with a modified ultra slim body with contact alignment in a single row. These are available both in SMT termination suitable for reflow soldering and solder tail version for standard wave soldering. These connectors also feature solderable retention pegs that absorb vibration.

- Ultra slim design saves space
- Automated assembly saves overall process costs
- Better co–planarity ensures higher quality
- Solderable retention pegs absorb vibration
- More seating area of contact surface ensures firm soldering



TARGET MARKETS



FEATURES

- Ultra slim design with single row contacts
- Larger seating area of contact surface to SMT PAD compared to other products
- Co–planarity can be controlled during assembly itself
- Solderable retention pegs
- Unique design for riveting clinch nut to shell with fool proof torque and electrical continuity
- Extra cover to hold contact firm to housing
- SMT connector comes in Tape & Reel packaging
- Mating interface follows DIN 41652 and MIL–C–24308 dimensional standards

BENEFITS

- Saves 66% of PCB board space
- Contact of size 0.45 x 1.4 with firm soldering support
- Ensures better product quality
- Absorb vibration
- Secured grounding
- Strong retention between housing and contact
- Support automated assembly and saves process time
- Intermateable with standard connectors

TECHNICAL INFORMATION

MATERIAL

- Insulator: LCP 30% GF
- Contact: Copper alloy
- Grounding Material: Brass

ELECTRICAL PERFORMANCE

- Maximum Current Rating: 5A for SMT version
- Contact Resistance: <25mΩ
- Rated Voltage: 300V.rms

MECHANICAL PERFORMANCE

- Retention Against Torque: 0.7NM min.
- Insulation Resistance: >5000mΩ
- Creepage & Clearance Length: >1mm

ENVIRONMENTAL

- Operating Temperature Range: –55°C to +125°C

APPROVALS & CERTIFICATION

- UL (pending)

SPECIFICATIONS

- Durability:
  - 500+ mating cycles for SMT version
  - 200 mating cycles for solder tail version

PACKAGING

- Tape & Reel for SMT version
- Tray for solder tail version

TARGET MARKETS/APPLICATIONS


Server
Switches


Smart TV
Smart Meter


Router
Power Supply


Servo Drives
Controllers


Scanner
Ventilator

PART NUMBERS

Description	Part Numbers
9 pin Male R/A SMT Slimline, Harpoons, Standard hole, Tray	D09P71S6GA00LF
9 pin Male R/A SMT Slimline, Harpoons, Standard hole, Tape & Reel	D09P71S6GA12LF
9 pin Male R/A SMT Slimline, Harpoons, UNC 4–40 Threaded insert, Tape & Reel	D09P71S6GX12LF
9 pin Male R/A SMT Slimline, Harpoons, M3 Threaded insert, Tape & Reel	D09P71S6GL12LF

BASICSDSUBSLNE0921EA4

Disclaimer
Please note that the above information is subject to change without notice.

D-Sub Cable Connectors

Amphenol's FCI D-Sub connectors are part of an industry standard for applications requiring robust and reliable connectors. These proven D-Sub connectors are one of the most popular Input/Output interconnects, addressing a wide variety of applications in telecommunications, data, consumer, industrial, military, instrumentation and medical. Amphenol FCI offers a wide range of D-Sub connectors to meet various design requirements including those in harsh environment.

These cable connectors are designed to act as input output connectors and mate with PCB connectors or another cable connector depending on the application. It comes with solder bucket and crimp terminations. Various associated accessories including Hoods and locking devices help to prevents risks of pulling up and accidental un-mating.



TARGET MARKETS



FEATURES

- A Basic I/O connector comes with five shell size and housing design
- Has a D-shaped shell design
- Meets DIN 41652 and MIL-C-24308 dimensional standards
- Available in Solder Bucket, Crimp terminations
- Frugal- D design (2 shells + 2 housings) with stamped & formed contacts
- Various PCB and Panel mounting accessory options available
- Hoods available in plastic, metalized and metallic form with locking screws
- Lead-free and RoHS compliant

BENEFITS

- Most popular Rugged and sturdy I/O connector
- Supports the need for polarisation
- Interchangable and intermateable with other makes
- Support all Cable mounting requirements
- Economical solution
- Wide variety of choices for secure connection
- Supports cable connection; Prevents risks of pulling up and accidental un-mating
- Meets environmental, health and safety requirements

STAMPED AND ROLLED CONTACTS

UL RECOGNISED FILE E 66906

D series is the standard D-Sub full metal shell version with stamped contacts. This design is basically proposed in solder bucket version.



PART NUMBER SELECTOR

D	E		09	P	0	64		T	X	LF
SERIES	SHELL SIZE	LOCKING ACCESSORIES	TOTAL CONTACTS	CONTACTS TYPE	TERMINATION TYPE	MATING CYCLES	TERMINATION TYPE	SHELL PLATING	DIMPLES	LEAD-FREE

SERIES
D

SHELL SIZE
E
A
B
C
D

LOCKING ACCESSORIES	
Blank	Standard
L	Threaded Insert M3
O	Threaded Insert UNC 4-40
V	Female screw (Hexagonal) UNC 4-40

TOTAL CONTACTS
09
15
25
37
50

CONTACTS TYPE	
Pin	P
Socket	S

TERMINATION TYPE	
Solder Bucket	0

MATING CYCLES	
≥200	64
≥500	65

TERMINATION TYPE	
Solder Buckets	Index
Without accessory	Blank
Shielding termination fingers*	H*

SHELL PLATING	
Standard tin plating	T

DIMPLES	
Standard on male connector only	X

LEAD-FREE
LF

SPECIFIC DIMENSIONS

Solder Buckets

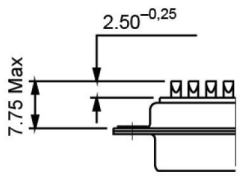

Disclaimer
Please note that the above information is subject to change without notice.

CRIMP CONTACTS AND CABLE CONNECTORS

UL RECOGNISED FILE E 66906

- 8656 series is a D connector with removable crimp contacts for AWG 20/24 or 24/28 wires
- It is used for commercial cabling like computer equipment, cash register
- It accepts our standard accessories (hoods, locking devices) and is available with a complete range of crimping tools from hand tools to high volume production equipment



PART NUMBER SELECTOR – CRIMP CONNECTOR HOUSING (W/O CONTACTS)

8656		09	P	L	T	X	LF
SERIES	LOCKING ACCESSORIES	NO. OF CONTACTS	CONTACTS	L	SHELL PLATING	DIMPLES	LEAD-FREE

- LEAD-FREE: Lead Free
- SERIES: 8656
- LOCKING ACCESSORIES: Standard mounting hole (Ø = 3.10) – Blank; Threaded insert UNC 4-40 – O; Female screw (Hexagonal) UNC 4-40 – V
- NO. OF CONTACTS: 09, 15, 25, 37, 50
- CONTACTS: Pin – P; Socket – S
- L: Supplied without contacts (obligatory)
- SHELL PLATING: Standard tin plated – T
- DIMPLES: Standard on male shell only – X

PART NUMBER SELECTOR – CRIMP CONTACTS

Contact Type	Packaging Type		
	Box of 500 Contacts √	Reel of 400 Contacts R	Reel of 5000 Contacts √
AWG 24/28 male	865635006 Δ	8656300306 Δ	8656451006 Δ
AWG 24/28 female	865635106 Δ	8656300406 Δ	8656651006 Δ
AWG 20/24 male	865635206 Δ	8656300506 Δ	8656452006 Δ
AWG 20/24 female	865635306 Δ	8656300606 Δ	8656652006 Δ

Δ Contact performance code

4LF: ≥200 mating/unmating, RoHS compatible
5LF: ≥500 mating/unmating, RoHS compatible

SPECIFIC DIMENSIONS

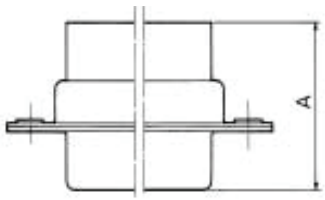

Contacts	09	15	25	37	50
$A_{Max.}$ Pin	17.19	17.19	17.35	17.35	17.35
Socket	17.44	17.44	17.44	17.44	17.44

CABLE PREPARATION

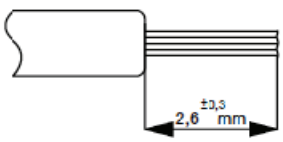

Disclaimer
Please note that the above information is subject to change without notice.

MIXED AND FULL POWER CABLE CONNECTORS

LAYOUTS

- Male insulator front view

Shell size	Layout	
E	5W1	
A	11W1	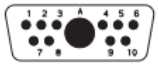
	7W2	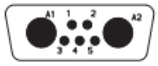
	3W3	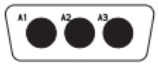
	3V3	
B	21W1	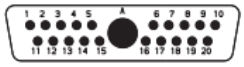
	17W2	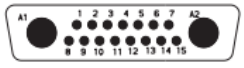
	13W3	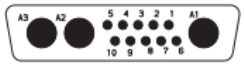
	9W4	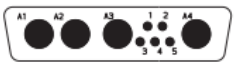
	5W5	

Shell size	Layout	
C	25W3	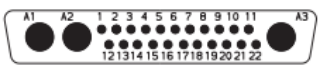
	21WA4	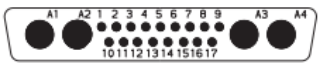
	27W2	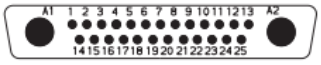
	8W8	
D	47W1	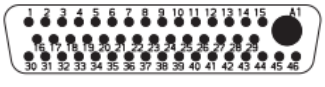
	24W7	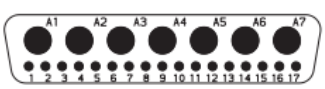
	36W4	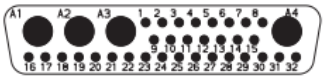

● Standard contacts

● Coaxial and power contacts

Disclaimer
Please note that the above information is subject to change without notice.

MIXED AND FULL POWER CABLE CONNECTORS

UL RECOGNISED FILE E66906



ORDERING INFORMATION

D	B	L	13	W	3	P			A	00LF

- D: Series
- B: Shell size (tin plated): E, A, B, C, D
- L: Mounting Options
- 13W3: Layout of contacts
- P: Contacts

Contacts	
Pin	P
Socket	S

Mounting Options						
Description	Blank	L	O	I	V	F
Solder buckets	X	X	X	X	X	X

- Durability

Durability	
200 mating/unmating	Blank
500 mating/unmating	43

- Termination Type

Termination Type	
Solder bucket	Blank

- A: Without accessory on PCB
- 00LF: RoHS compatible

X: Available
Blank: without accessory
L: Threaded insert M3
O: Threaded insert UNC 4–40
V: Female screw UNC 4–40

SPECIFIC DIMENSIONS

Solder Bucket

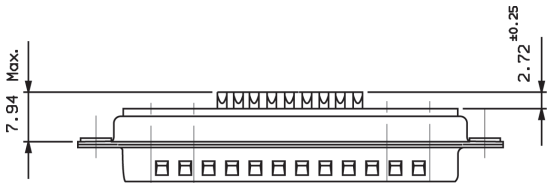

Solder version

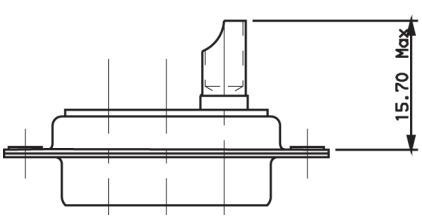

Crimp version

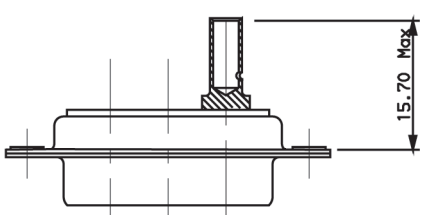

Disclaimer
Please note that the above information is subject to change without notice.

POWER SOLDER AND CRIMP CONTACTS

SOLDER CONTACTS

Male

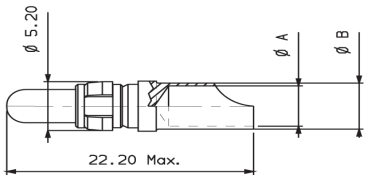

Female

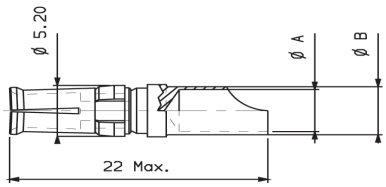



Type	Max. Current Rating	Clip Colour	RoHS* Part Number ≥200 mating/ unmating	RoHS* Part Number ≥500 mating/ unmating	Wire		Strip length mm±0.5	Ø A +0.1 +0	Ø B +0.5
					Size	Section mm2			
Male	10A	Black	8638PPS1005LF	8638PPS1006LF	16	1.3	7	1.7	2.6
Male	15A	White	8638PPS1505LF	8638PPS1506LF	14	1.9	7	2.1	3
Male	20A	Red	8638PPS2005LF	8638PPS2006LF	12	3.2	7	2.8	3.65
Male	40A	Blue	8638PPS4005LF	8638PPS4006LF	8	9	7	4.4	5
Female	10A	Black	8638PSS1005LF	8638PSS1006LF	16	1.3	7	1.7	2.6
Female	15A	White	8638PSS1505LF	8638PSS1506LF	14	1.9	7	2.1	3
Female	20A	Red	8638PSS2005LF	8638PSS2006LF	12	3.2	7	2.8	3.65
Female	40A	Blue	8638PSS4005LF	8638PSS4006LF	8	9	7	4.4	5

Clip material: Plastic withstanding 125°C
Termination plating: Matt tin
*RoHS compatible EU directive 2002/95/EC

Disclaimer
Please note that the above information is subject to change without notice.

POWER SOLDER AND CRIMP CONTACTS

CRIMP CONTACTS

Male

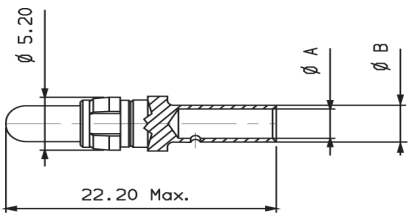

Female

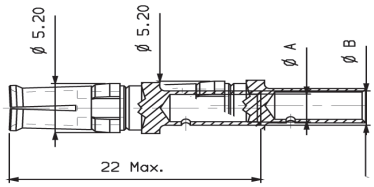



Type	Max. Current Rating	Clip Colour	RoHS* Part Number ≥200 mating/ unmating	RoHS* Part Number ≥500 mating/ unmating	Wire		Strip length mm±0.5	Ø A +0.1 +0	Ø B +0.5
					Size	Section mm2			
Male	10A	Black	8638PPC1005LF	8638PPC1006LF	16 to 18	0.9 to 1.3	7	1.8	2.55
Male	15A	White	8638PPC1505LF	8638PPC1506LF	12 to 14	2 to 3	7	2.8	3.7
Male	20A	Red	8638PPC2005LF	8638PPC2006LF	9	6	7	3.75	4.65
Male	40A	Blue	8638PPC4005LF	8638PPC4006LF	8 to 10	5 to 8	7	4.8	5.5
Female	10A	Black	8638PSC1005LF	8638PSC1006LF	16 to 18	0.9 to 1.3	7	1.8	2.55
Female	15A	White	8638PSC1505LF	8638PSC1506LF	12 to 14	2 to 3	7	2.8	3.7
Female	20A	Red	8638PSC2005LF	8638PSC2006LF	9	6	7	3.75	4.65
Female	40A	Blue	8638PSC4005LF	8638PSC4006LF	8 to 10	5 to 8	7	4.8	5.4

Clip material: Plastic withstanding 125°C
Termination plating: Matt tin
*RoHS compatible EU directive 2002/95/EC

Disclaimer
Please note that the above information is subject to change without notice.

CONTACTS (OTHER VERSIONS)

POWER CONTACTS – METAL CLIP

Female

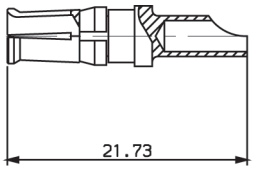

Male

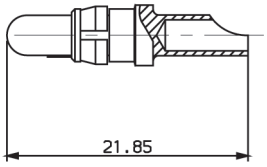

Wire Size	Max. Current	Part Numbers	
		Male	Female
AWG8	40A	86303098NLF	86303099NLF
AWG12	20A	86303056NLF	86303057NLF
AWG14	15A	86303060NLF	86303061NLF
AWG16	10A	86303064NLF	86303065NLF

COAXIAL CONTACTS

Straight

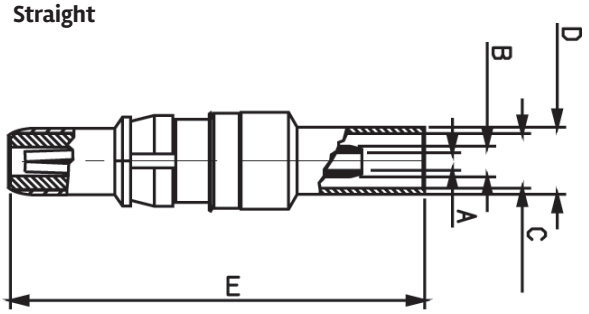

Male

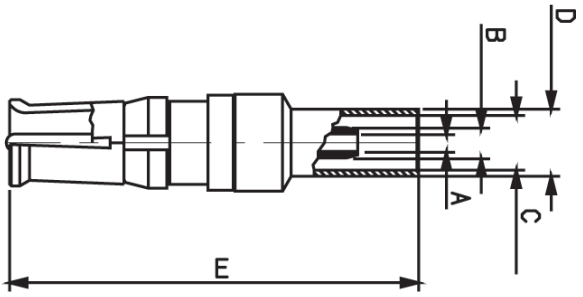

Female

HIGH VOLTAGE CONTACTS

Male 86382000LF

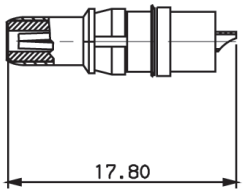

Colors: Blue

Female 86382001LF

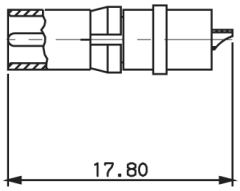

White

Angled

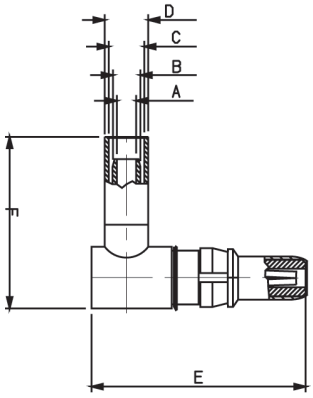

Male

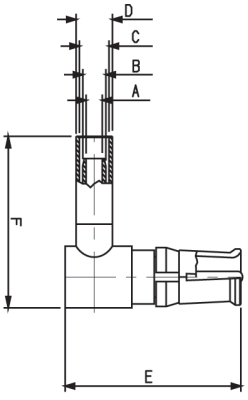

Female

These removable contacts are suitable for the contact cavities of the DMW series and DW series.
The coxial contacts are in compliance with:
- NFC 93569
- KMX4 specification

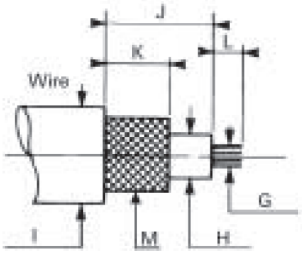

Disclaimer
Please note that the above information is subject to change without notice.

TECHNICAL INFORMATION

ELECTRICAL PERFORMANCE

- Dielectric Withstanding Voltage: 2800V RMS
- Break Down Voltage: 3200V RMS
- Insulation Resistance: $10^6 M\Omega$
- Contact Resistance: $\leq 5m\Omega$
- Max. Current Rating: 5A
- Material: TEFLON

ENVIRONMENTAL

- Operating temperature range: –55° C to +125° C

MECHANICAL PERFORMANCE

- Mating force per set of contact: 3 N
- Mating endurance: 200

TARGET MARKETS/APPLICATIONS



Asymmetric Digital Subscriber Line (ADSL)
Base Station
Switching
Transmission



Set–top Box



Desktop and Laptop
Storage System
Router and Server



Automotive Diagnostics
Control Drives
Energy Meter
Gaming Machine
Test Equipment
Office Automation
POS & Handheld terminal
Power Supplies
Parking Meter
Printer and Copier
Renewable Energy
Robotics
Surveillance Camera



Medical Instrument



Avionics
Military Equipment

Disclaimer
Please note that the above information is subject to change without notice.

D–Sub High Density Connectors

The new High Density D–Sub range is part of Amphenol's FCI I/O–Connector portfolio which provides customers access to a wide range of industry standard and application specific I/O interconnect solutions. Amphenol's FCI I/O connector solutions complete your board and system designs by providing high–density and high–speed interfaces to enable interconnect technologies for networking, storage and memory and complementary products for power distribution. Our range of standardized I/O solutions enables full compliance to industry standards, such as Ethernet, SFF, Infiniband, USB, PCMCIA or HDMI. Amphenol FCI also has the capability to provide customized I/O solutions optimized to address application specific requirements.

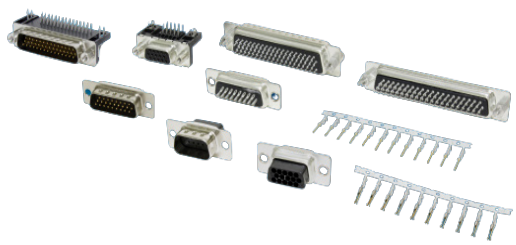

TARGET MARKETS

Through Amphenol's FCI high–speed, power, assembly and mechanical packaging expertise, you gain the advantage of getting your signals out of the box at optimal cost and performance. Amphenol's FCI I/O connectors – coupled with Amphenol FCI extensive range of backplane and board–to–board connectors and cable assembly products–enable complete link solutions for your equipment designs.

Amphenol's FCI D–Sub connectors are part of an industry standard for applications requiring robust and reliable connectors. These D–Sub connectors are one of the most popular Input – Output interconnects, addressing a wide variety of applications in Telecommunications, Data, Consumer, Industrial, Military, Instrumentation and Medical markets. Since many years Amphenol FCI offers a wide range of D–Sub connectors to meet all design requirements, and to address increasing needs for high density packaging, Amphenol FCI developed the D–Sub High Density Range.

FEATURES	BENEFITS
▪ High density Dsub connectors can accommodate more number of contacts in the basic shell sizes	▪ Answer to the increasing need for higher density packaging
▪ Selected layouts are also available in Press–fit and Pin–in–Paste versions	▪ Meets different termination needs
▪ Pin–in–Paste connectors comes in Tape & Reel packaging	▪ Time saving as it can be automatically positioned on the board using pick and place processes
▪ Various PCB and Panel mounting accessory options available	▪ Wide variety of choices for secure connection
▪ Hoods available in plastic, metalized and metallic form with locking screws	▪ Supports cable connection; Prevents risks of pulling up and accidental un–mating
▪ Lead–free and RoHS compliant	▪ Meets environmental, health and safety requirements

TECHNICAL INFORMATION

MATERIAL

- Insulator: Glass filled thermoplastic (UL94V–0) black
- Contact: Copper alloy
- Shell: SPCC steel

ELECTRICAL PERFORMANCE

- Current Rating: Rated current: 2.5A
- Rated Voltage: 250V
- Contact Resistance: 25mΩ max. Initial and 40mΩmax. after
- Insulation Resistance: 5000mΩ min. at 500V DC
- Dielectric Strength: 750V RMS
- Operating Temperature Range: 55°C to +105°C

MECHANICAL PERFORMANCE

- Mating/Un–mating Cycles: 200/500
- Insertion/Extraction Force per contact: 5N max. / 0.2N min.

TARGET MARKETS/APPLICATIONS



Asymmetric Digital Subscriber Line (ADSL)
Base Station
Switching
Transmission



Set–top Box



Desktop and Laptop
Storage System
Router and Server



Automotive Diagnostics
Control Drives
Energy Meter
Gaming Machine
Test Equipment
Office Automation
POS & Handheld terminal
Power Supplies
Parking Meter
Printer and Copier
Renewable Energy
Robotics
Surveillance Camera
Avionics



Medical Instrument



Military Equipment

Disclaimer
Please note that the above information is subject to change without notice.

HIGH DENSITY D–SUB STRAIGHT

ORDERING INFORMATION

SERIES — P — YY — 4 — X — LF

Series	Part Number
Male straight	10090928
Female straight	10090929

Gender	
Pin	P
Socket	S

No Of Contacts
15
26
44

Mounting Options	
UNC 4–40 Screw locks with Board locks	V
UNC 4–40 Clinch nuts with Board locks	X
M3 Clinch nuts with Board locks	L

Durability	
200 mating cycles	4
500 mating cycles	6

RoHS status
RoHS compliant

PCB LAYOUT

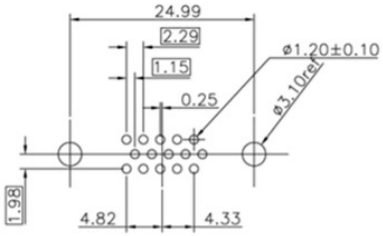

P.C.B LAYOUT(FOR 15P)

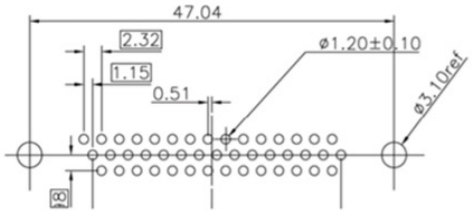

P.C.B LAYOUT(FOR 44P)

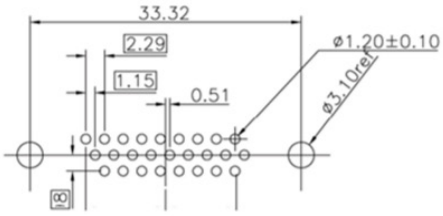

P.C.B LAYOUT(FOR 26P)

Disclaimer
Please note that the above information is subject to change without notice.

DIMENSION FOR MOUNTING OPTION 'X/L'

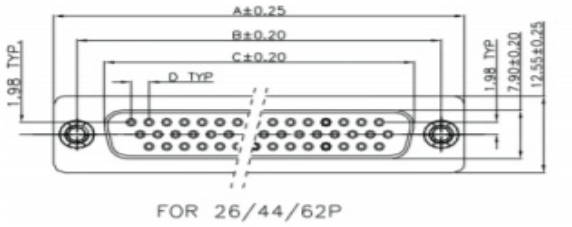

Pos.	Part Number	A	B	C	D	E
15P	10090929-S15**LF	30.81	24.99	16.33	2.29	19.10
26P	10090929-S26**LF	39.24	33.32	24.66	2.29	27.75
44P	10090929-S44**LF	53.04	47.04	38.38	2.29	41.30

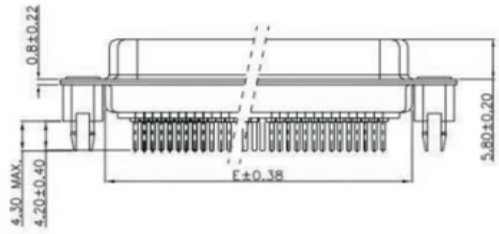



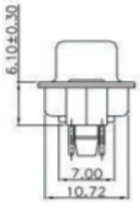

Disclaimer
Please note that the above information is subject to change without notice.

HIGH DENSITY D–SUB RIGHT ANGLE

ORDERING INFORMATION

SERIES — P — YY — 4 — X — LF

No Of Contacts
15
26
44

RoHS status
RoHS compliant

Gender	
Pin	P
Socket	S

Durability	
200 mating cycles	4
500 mating cycles	6

Mounting Options	
UNC 4–40 Screw locks with Board locks	V
UNC 4–40 Clinch nuts with Board locks	X
M3 Clinch nuts with Board locks	L

Series	Part Number
Male Right Angle	10090926

DIMENSION FOR MOUNTING OPTION 'V'

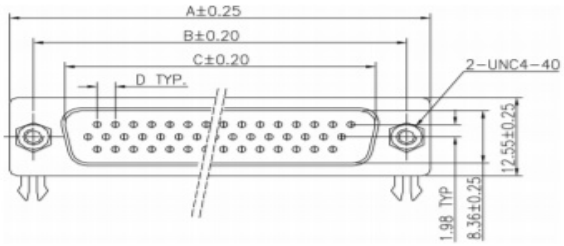

Pos.	Part Number	A	B	C	D	E	F	H
15P	10090926–P15*VLF	30.81	24.99	16.92	2.29	8.19	7.68	5.9 +0.25 −0
26P	10090926–P26*VLF	39.24	33.32	25.25	2.29	8.01	7.02	5.9 +0.25 −0
44P	10090926–P44*VLF	53.04	47.04	38.96	2.29	8.02	7.01	5.9 +0.25 −0

Disclaimer
Please note that the above information is subject to change without notice.

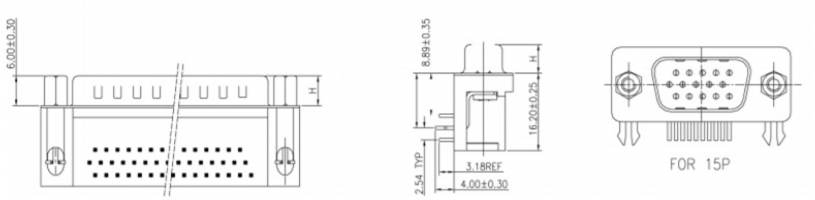

PCB LAYOUT

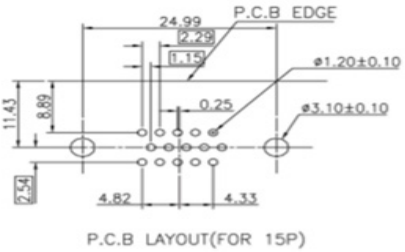

P.C.B LAYOUT(FOR 15P)

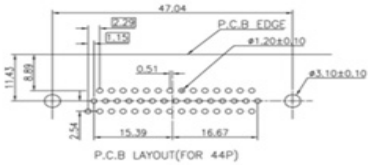

P.C.B LAYOUT(FOR 44P)

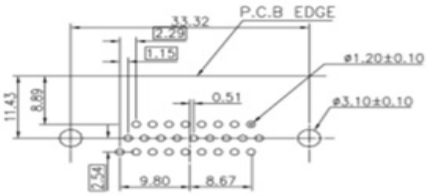

P.C.B LAYOUT(FOR 26P)

Disclaimer
Please note that the above information is subject to change without notice.

HIGH DENSITY D–SUB RIGHT ANGLE FEMALE

UL RECOGNISED FILE E 118235 (R)



ICD — 15 — S — 13E — 4 GX — 00LF

Series: ICD

No Of Contacts
15
26
44

Contacts	
Female	S

Termination	
Angled spills – US Standard, 3.18mm	13E

Durability	
Standard class (≥200 mating/unmating)	4
High performance class (≥500 mating/unmating)	6

Options	
Standard series, RoHS compliant	00LF

Mounting Options	
Standard holes	PA
Threaded insert (M3)	PL
Threaded insert (UNC 4–40)	PX
Female screw (UNC 4–40)	PV
Harpoons + insert M3 + elec. continuity	GL
Harpoons + insert UNC 4–40 + elec. continuity	GX
Harpoons + female (UNC 4–40) + elec. continuity	GV
Insert M3 + elec. continuity	UL
Insert UNC 4–40 + elec. continuity	UX
Female screw UNC 4–40 + elec. continuity	UV

Disclaimer
Please note that the above information is subject to change without notice.

HIGH DENSITY D–SUB 3 ROWS (15/26/44 POS)

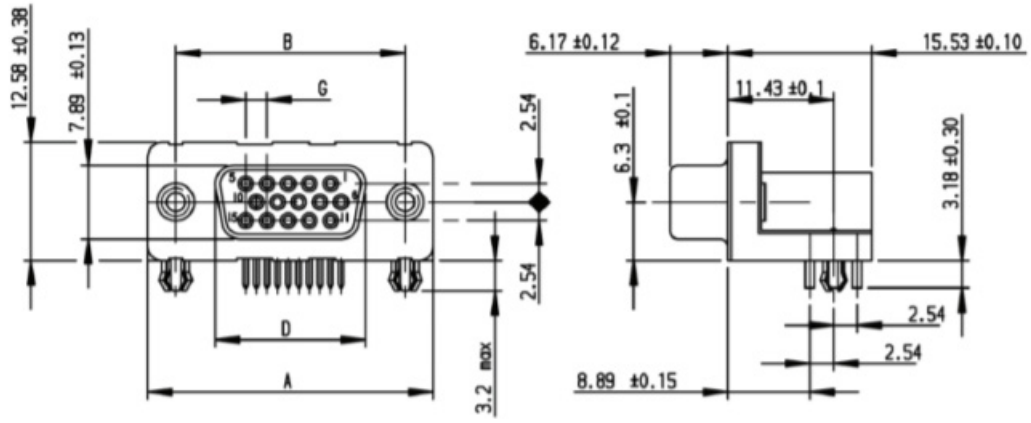

Size	Dimensions						
	A + 0.38	B + 0.12	C + 0.10	D + 0.25	E	F	G
15	30,81	24,99	16,96	16,21	7,68	8,19	2,285
26	39,14	33,32	25,18	24,54	7,02	8,01	2,285
44	53,03	47,04	39,12	38,25	7,01	8,02	2,285

PCB DRILLING DIMENSIONS

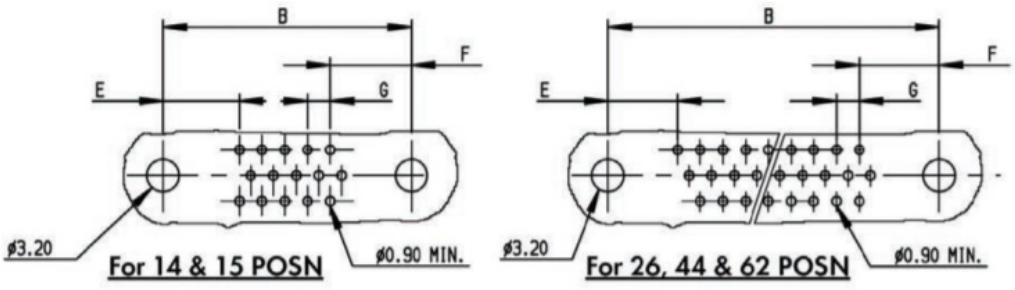

Disclaimer
Please note that the above information is subject to change without notice.

HIGH DENSITY D-SUB SOLDER BUCKET

ORDERING INFORMATION

SERIES — P — YY — 4 — A — LF

No Of Contacts
15
26
44

RoHS status
RoHS compliant

Gender	
Pin	P
Socket	S

Durability	
200 mating cycles	4
500 mating cycles	6

Mounting Options	
Standard Hole	A

Description	Series
Male Solder Bucket	10090769
Female Solder Bucket	10090770

DIMENSION

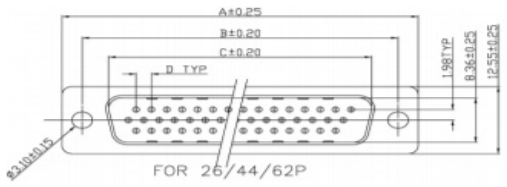

Pos.	Part Number	A	B	C	D	E	H
15P	10090769-P15*ALF	30.81	24.99	16.92	19.10	2.29	5.9 +0.25 −0
26P	10090769-P26*ALF	39.24	33.32	25.25	27.75	2.29	5.9 +0.25 −0
44P	10090769-P44*ALF	53.04	47.04	38.96	41.30	2.29	5.9 +0.25 −0

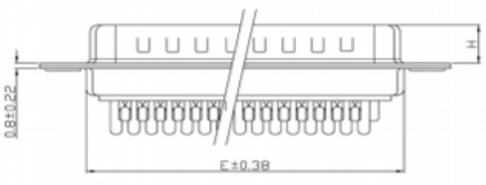

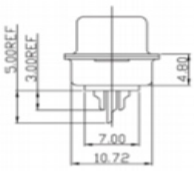

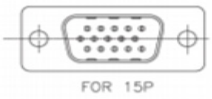

Disclaimer
Please note that the above information is subject to change without notice.

ACCESSORIES (HOODS)

Plastic: Core Range PNs	Metalised: Core Range PNs	Metallic: Core Range PNs
86303637BLF	863093C09MLF	8655MH0901BLF
86303638BLF	863093C15MLF	8655MH1501BLF
86303639BLF	863093C25MLF	8655MH2501BLF

Part Description	Part Number
Dsub High density straight 15 way solder pin	10090928–P154VLF
Dsub High density straight 26 way solder pin	10090928–P264VLF
Dsub High density straight 44 way solder pin	10090928–P444VLF
Dsub High density straight 15 way solder socket	10090929–S154VLF
Dsub High density straight 26 way solder socket	10090929–S264VLF
Dsub High density straight 44 way solder socket	10090929–S444VLF
Dsub High density straight 15 way solder pin	10090928–P154XLF
Dsub High density straight 26 way solder pin	10090928–P264XLF
Dsub High density straight 44 way solder pin	10090928–P444XLF
Dsub High density straight 15 way solder socket	10090929–S154XLF
Dsub High density straight 26 way solder socket	10090929–S264XLF
Dsub High density straight 44 way solder socket	10090929–S444XLF
Dsub High density right angle 15 way solder pin	10090926–P154VLF
Dsub High density right angle 26 way solder pin	10090926–P264VLF
Dsub High density right angle 44 way solder pin	10090926–P444VLF
Dsub High density right angle 15 way solder socket	ICD15S13E4GV00LF
Dsub High density right angle 26 way solder socket	ICD26S13E4GV00LF
Dsub High density right angle 44 way solder socket	ICD44S13E4GV00LF
Dsub High density right angle 15 way solder pin	10090926–P154XLF
Dsub High density right angle 26 way solder pin	10090926–P264XLF
Dsub High density right angle 44 way solder pin	10090926–P444XLF

Disclaimer
Please note that the above information is subject to change without notice.

PART NUMBER LIST

Part Description	Part Number
Dsub High density right angle 15 way solder socket	ICD15S13E4GX00LF
Dsub High density right angle 26 way solder socket	ICD26S13E4GX00LF
Dsub High density right angle 44 way solder socket	ICD44S13E4GX00LF
Dsub High density 15 way solder bucket pin	10090769–P154ALF
Dsub High density 26 way solder bucket pin	10090769–P264ALF
Dsub High density 44 way solder bucket pin	10090769–P444ALF
Dsub High density 15 way solder bucket socket	10090770–S154ALF
Dsub High density 26 way solder bucket socket	10090770–S264ALF
Dsub High density 44 way solder bucket socket	10090770–S444ALF

INODSUBHDEN0921EA4

Disclaimer
Please note that the above information is subject to change without notice.

D-Sub Pin-in-Paste Connectors

The D-Sub connectors are one of the most popular I/O solutions, addressing segments such as Telecommunications, Industrial, Instrumentation and Medical. Thanks to this very complete D-Sub range, Amphenol FCI is one of the most experienced suppliers. Now we are at the forefront once again in bringing you Pin-in-Paste (Through Hole Reflow) versions.



Pin-in-Paste technology (PiP) allows the use of Through Hole product in SMT manufacturing processes. The connectors are automatically or manually placed on the board, and then soldered in the same operation as the SMT components.

Thanks to the Pin-in-Paste technology, the mechanical strengths of the Through Hole Technology soldering is maintained – still an important requirement for connectors nowadays in many industrial or telecom applications.

FEATURES	BENEFITS
▪ Through hole pins, HT insulator and metal pegs design followed in PiP	▪ Supports Reflow soldering
▪ Unlike SMT, PiP requires no specific and complex design in order to achieve co-planarity	▪ 20% lower price compared to SMT
▪ Pin-in-Paste connectors can be automatically positioned on the board using automatic pick and place processes (vacuum nozzle or gripper) thanks to an improved true positioning	▪ Time-saving
▪ Less control time after reflow process and less re-work time for repairing	▪ Time-saving
▪ Same PCB layouts and hole diameters of signal hole contacts are maintained	▪ Fast and easy switchover from a wave soldering to a reflow process
▪ Pin-in-Paste connector has a more stable process than wave soldering as it does not need constant adjust once set up	▪ Higher quality
▪ Thorugh hole technology is maintained in Pin-in-Paste	▪ Higher robustness in Pin-in-Paste than SMT

CONNECTOR DESIGN

OVERVIEW

In order to achieve optimum soldering results, Amphenol FCI launches dedicated Pin-in-Paste connectors. These connectors are fully adapted to Pin-in-Paste processing in all aspects, including plastic material, metal peg, housing design, pin length, and packaging.



PLASTIC MATERIAL

The Amphenol's FCI D-Sub Pin-in-Paste connectors are molded in high temperature plastic able to withstand a temperature exposure up to 260°C peak for 10 to 30 seconds in a convection infrared or vapor-phase reflow oven.

METAL PEG

To ensure electrical continuity and low insertion forces, a specific metal peg has been designed. These metal pegs significantly increase the connection robustness after soldering.

HOUSING DESIGN

Standoffs are specificallydesigned around the metal pegs to avoid any paste interaction between the back housing and the PCB. Consequently, the paste can spread around the metal peg, keeping the connector in its correct and original position.

PIN LENGTH

The termination length beyond the bottom of the PCB is shorter than traditional solder-to-board products. Thus, the risk of pushing out the solder paste when setting the pin into the PCB hole is very much limited. The solder paste will not stick on the pin tip or even fall off completely, but stays around the pin for free flow during soldering. Amphenol FCI uses pin lengths corresponding to the PCB thickness +0.4mm. For a 1.6mm PCB thickness, the pin length is 2.0mm.

PLASTIC MATERIAL

The Amphenol's FCI D-Sub connectors can be packaged in different ways depending on existing installed processes.

- Tray Packaging
- Ideal for manual placing and low volume applications

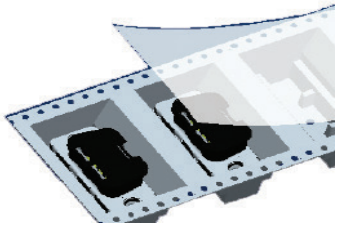

- Tape and Reel packaging
- With or without pick-up caps: fully compatible with automatic pick and place processes like grippers or vacuum nozzles, for medium and high volume applications

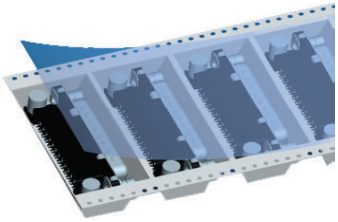

Disclaimer
Please note that the above information is subject to change without notice.

DELTA D SIGNAL RIGHT ANGLE PIN–IN–PASTE

In compliance with DIN 41652:
- Reflow type: JSTD–020C
- Packaging: IEA–481–B
- Plating: BELLCORE CO GR–1217



TECHNICAL INFORMATION

MATERIALS

- Shell: Steel, nickel plated
- Housing: Thermoplastic HT UL94V–O
- Contacts: Copper alloy
- Active Part: Gold over nickel
- Termination: Matt tin over nickel
- Accessories: Brass
- Front Accessories: Nickel
- Metal Pegs: Tin over nickel

MECHANICAL PERFORMANCE

- Mating/unmating cycles: 500min.

ELECTRICAL PERFORMANCE

- Current Rating: 5A
- Insulation Resistance: ≥5000MΩ
- Contact Resistance: <10mΩ
- Dielectric Withstanding Voltage: 1000V RMS

SPECIFICATIONS

- Product lead free in accordance to RoHS 2002/EC/95

ENVIRONMENTAL

- Operating Temperature Range: –55°C to 125°C

ORDERING INFORMATION

D	09	P	13A	6	RV	12	LF

LF: RoHS compatible EU directive 2002/95/EC

D: Series

Number of Contacts
09
15
25
37

Contacts	X
Pin	P
Socket	S

6: High performance class (> 500 mating/unmating)

Packaging	XX
Tray for manual positioning	09
Tape and Reel for automatic pick and place	12

Mounting Options	XX
Insert M3 + metal peg + electrical continuity	RL
Insert UNC 4–40 + metal peg + electrical continuity	RX
Female screw UNC 4–40 + metal peg + electrical continuity	RV





Termination				
Type	Footprint/ Pitch	Termination Length	PCB Thickness	XXX
Right angle – Europe Standard	10.4/2.54mm	2.0mm	1.6mm	13A
Right angle – US standard	8.08/2.84mm	2.0mm	1.6mm	33E

Disclaimer
Please note that the above information is subject to change without notice.

ADDITIONAL INFORMATION

RECOMMENDED LAYOUTS AND PAD DIMENSIONS

Contacts	B±0.10	F	G
09	24.99	10.96	8.22
15	33.32	19.18	16.44
25	47.04	33.12	30.36
37	63.50	49.68	46.92

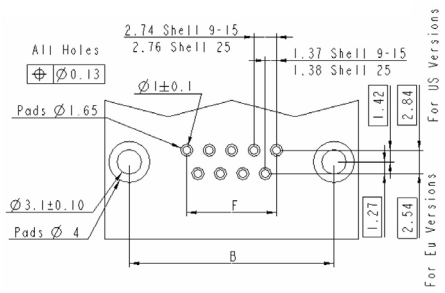

SPECIFIC DIMENSIONS

Europe Style

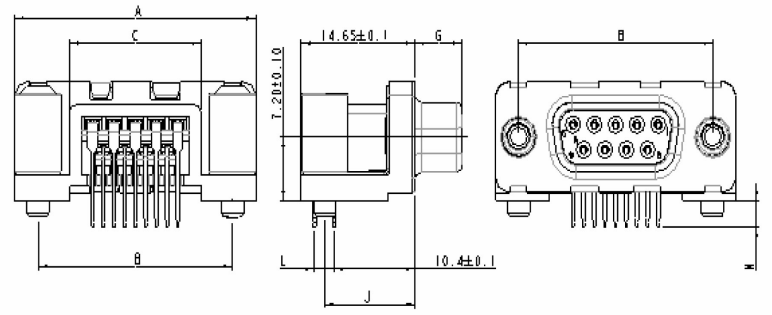

US Style

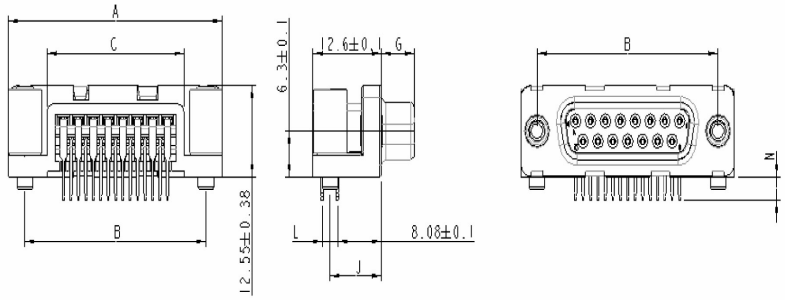

Contacts		A±0.38	B±0.12	C±0.10	G-0/+0.25	J±0.10		L±0.10		N±0.30	
						Termination 13A	Termination 33E	Termination 13A	Termination 33E	Termination 13	
										13A/33E	13B
09	P	30.81	24.99	16.96	5.90 -0/+0.15	11.67	9.50	2.54	2.84	2.00	2.90
	S	30.81	24.99	16.96	6.05	11.67	9.50	2.54	2.84	2.00	2.90
15	P	39.14	33.32	25.18	5.90-0/+0.15	11.67	9.50	2.54	2.84	2.00	2.90
	S	39.14	33.32	25.18	6.05	11.67	9.50	2.54	2.84	2.00	2.90
25	P	53.03	47.04	39.12	5.70	11.67	9.50	2.54	2.84	2.00	2.90
	S	53.03	47.04	39.12	6.05	11.67	9.50	2.54	2.84	2.00	2.90
37	P	69.32	63.50	55.68	5.70	11.67	9.50	2.54	2.84	2.00	2.90
	S	69.32	63.50	55.68	6.05	11.67	9.50	2.54	2.84	2.00	2.90

Dimensions in mm

Disclaimer
Please note that the above information is subject to change without notice.

DELTA D SIGNAL STRAIGHT PIN-IN-PASTE

In compliance with DIN 41652:
- Reflow type: JSTD-020C
- Packaging: IEA-481-B
- Plating: BELLCORE CO GR-1217

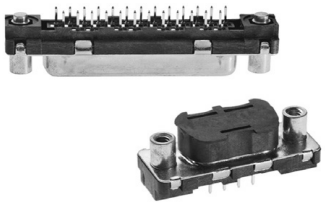

TECHNICAL INFORMATION

MATERIALS

- Shell: Steel, nickel plated
- Housing: Thermoplastic HT UL94V-O
- Contacts: Copper alloy
- Active Part: Gold over nickel
- Termination: Matt tin over nickel
- Accessories: Brass, bright tin over nickel

MECHANICAL PERFORMANCE

- Mating/unmating cycles: 500 min.

ELECTRICAL PERFORMANCE

- Current rating: 5A
- Insulation resistance: ≥5000MΩ
- Contact resistance: <10mΩ
- Dielectric withstanding voltage: 1000V RMS

SPECIFICATIONS

- Product lead free in accordance to RoHS 2002/EC/95

ENVIRONMENTAL

- Operating Temperature Range: -55°C to 125°C

BASE PART NUMBER

D	09	P	24A	6	RV	12	LF
Series	Number of Contacts	Contacts	Termination	High performance class (> 500 mating/unmating)	Mounting Options	Packaging	RoHS compatible EU directive 2002/95/EC

Number of Contacts
09
15
25
37
50

Contacts	X
Pin	P
Socket	S

Termination				
Type	Footprint/ Pitch	Termination Length	PCB Thickness	XXX
Straight version	6.0/2.84mm	2.0mm	1.6mm	24A
Straight version	6.0/2.84mm	2.9mm	2.4mm	24B

09 

12 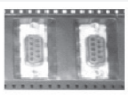

22 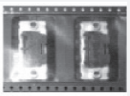

Packaging	XX
Tray for manual positioning	09
Tape and Reel for automatic pick and place	12
Tape and Reel and pick-up cap for vacuum nozzle device (not available in 37 and 50 ways)	22

Mounting Options	XX
Insert M3 + metal peg + electrical continuity	RL
Insert UNC 4-40 + metal peg + electrical continuity	RX
Female screw UNC 4-40 + metal peg + electrical continuity	RV

RL
RX 

RV 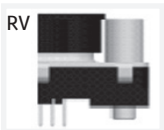

Disclaimer
Please note that the above information is subject to change without notice.

ADDITIONAL INFORMATION

RECOMMENDED LAYOUTS AND PAD DIMENSIONS

Contacts	B±0.10	F	G
09	24.99	10.96	8.22
15	33.32	19.18	16.44
25	47.04	33.12	30.36
37	63.50	49.68	46.92

9, 15, 25 & 37 contacts

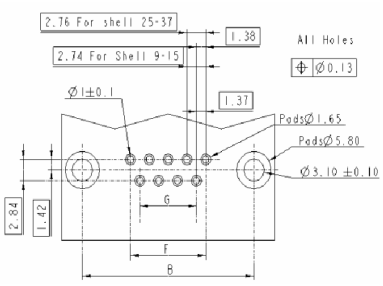

50 contacts

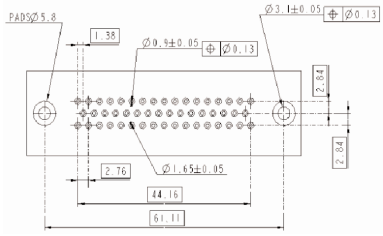

SPECIFIC DIMENSIONS

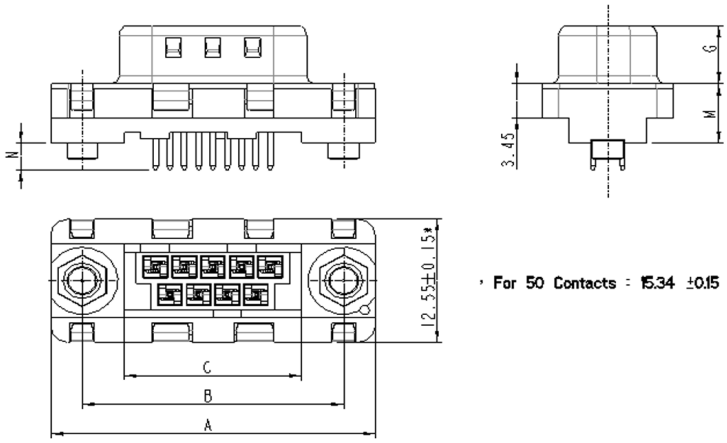

Contacts		A±0,38	B±0,12	C±0,10	G−0/+0.25	M±0,10	N±0,30 Termination Length	
							24A	24B
09	P	30.81	24.99	16.96	5.90 −0/+0.15	6.00	2.00	2.90
	S	30.81	24.99	16.96	6.05	6.00	2.00	2.90
15	P	39.14	33.32	25.18	5.90−0/+0.15	6.00	2.00	2.90
	S	39.14	33.32	25.18	6.05	6.00	2.00	2.90
25	P	53.03	47.04	39.12	5.70	6.00	2.00	2.90
	S	53.03	47.04	39.12	6.05	6.00	2.00	2.90
37	P	69.32	63.50	55.68	5.70	6.00	2.00	2.90
	S	69.32	63.50	55.68	6.05	6.00	2.00	2.90
50	P	67.10	61.11	54.11	5.70	6.00	2.90	2.90
	S	67.10	61.11	54.11	6.05	6.00	2.90	2.90

Dimensions in mm

INODSUBPIP0921EA4

Disclaimer
Please note that the above information is subject to change without notice.

D-Sub Pressfit Connectors

Amphenol's FCI D-Sub connectors are part of an industry standard for applications requiring robust and reliable connectors. These proven D-Sub connectors are one of the most popular Input/Output interconnects, addressing a wide variety of applications in Telecommunications, Data, Consumer Industrial, Military, Instrumentation and Medical. Since many years Amphenol FCI has been offering a wide range of D-Sub connectorsto meet various design requirements including those in harsh environment.

Amphenol FCI offers Standard density and Mixed power connectors in press fit termination. In SMT (Surface Mount Technology) manufacturing process, this Press-fit series connectors help to save the cost of an additional wave soldering. The "eye of the needle" termination combined with a special flat rock design (easy application by pressure on insulator) make this product line very attractive.



TARGET MARKETS



FEATURES

- Connectors are press-fitted into the PCB
- Flat rock contact design
- Eye of the needle termination
- Same connectors are compatible with PCB thicknesses of 1.6mm and 2.4mm
- Solder less board locking
- Press-fit boardlocks

BENEFITS

- Saves wave soldering cost
- Easy to mount
- Ensures retention in PCB
- Flexibility in application
- Solder less grounding
- Provides additional mechanical strength

RIGHT ANGLE PRESS FIT

UL RECOGNISED FILE E66906



ORDERING INFORMATION

D	25	P	82C	4	PA	00LF

Series:

Number of Contacts
09
15
25
37
50*

Contacts	
Pin	P
Socket	S

Durability	
Standard class (≥200 mating/unmating)	4
High performance class (≥500 mating/unmating)	6

Mouting Options	
Standard hole	PA
Threaded insert M3	PL
Threaded insert UNC 4-40	PX ✓
Female screw UNC 4-40	PV ✓
Harpoons + insert M3	GL
Harpoons + insert UNC 4-40	GX
Harpoons + female screw UNC 4-40	GV

RoHS Status	
Standard, RoHS compatible	00LF ✓

Termination		
Type	Footprint/Pitch	Code
Eurostyle	9.4/2.54 – 9 to 37 way 10.3/2.54 – 50 way	82C ✓
US standard	8.08/2.84 – 9 to 37 way	80C
Europe standard*	10.4/2.54 – 9 to 37 way	81C

*Only for Eurostyle version Preferred Option ✓

Disclaimer
Please note that the above information is subject to change without notice.

SPECIFIC DIMENSIONS

Eurostyle (82 C) 9-37 way

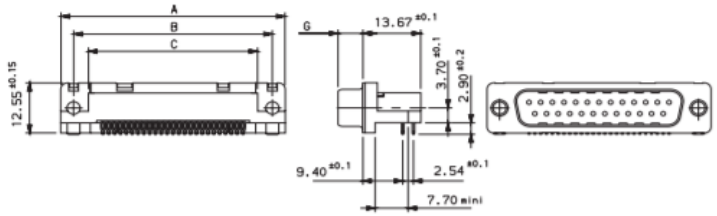

50 way

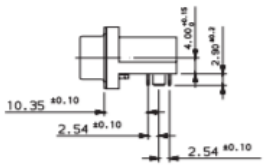

US Standard (80 C)

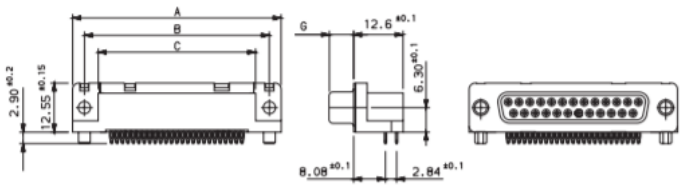

Europe Standard (81 C)

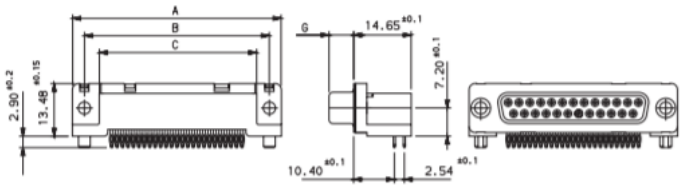

		A ±0,38	B ±0,12	C ±0,10	G -0/+0.25
09	P	30.81	24.99	16.96	5.90 -0/+0.15
	S	30.81	24.99	16.96	6.05
15	P	39.14	33.32	25.18	5.90 -0/+0.15
	S	39.14	33.32	25.18	6.05
27	P	53.03	47.04	39.12	5.70
	S	53.03	47.04	39.12	6.05
37	P	69.32	63.50	55.68	5.70
	S	69.32	63.50	55.68	6.05
50*	P	67.10	61.11	54.10	5.70
	S	67.10	61.11	54.10	6.05

*Only for Eurostyle version Preferred Option

SPECIFIC DIMENSIONS

- Application by pressure on insulator
- D-Sub insertion kit: 8646 3064 01
- Eye of the needle design

METALLIZED HOLE DIMENSIONS

			Press-fit Contacts	Press-fit Harpoons
PCB hole definition (note 1 and 2)		Drill diameter	Ø 1.15 ref (note 3)	Ø 3.22 ref (note 3)
		Drilled hole	Ø 1.18 – 1.2	Ø 3.19 – 3.25
		Copper plating	25µm min. (recommended 50µ max.)	25µm min. (recommended 50µ max.)
	non RoHS	Tin-lead plating	15µm max. (recommended 5µ min.)	15µm max. (recommended 5µ min.)
		Finish hole (after reflow)	Ø 0.94 – 1.09	Ø 3.02- 3.20
	RoHS	Tin plating	0.8 to 1.2µm	0.8 to 1.2µm
		Finish hole (after reflow)	Ø 1.00 – 1.09	Ø 3.08 – 3.20

Note 1: These dimensions must be respected to ensure press-fit pin performance
Note 2: According to IEC-352-S specification
Note 3: Vital requirement for press-fit pin performance

PRESS-FIT PERFORMANCE

	Press-fit Contacts	Press-fit Harpoons
Insertion force	≤100 N	≤120 N
Extraction force	≥30 N	≥30 N

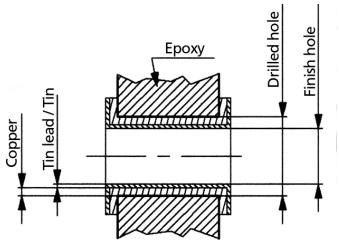

Disclaimer
Please note that the above information is subject to change without notice.

STRAIGHT PRESS-FIT

UL RECOGNISED FILE E E66906

- This new Press-fit connectors eliminate soldering process and saves cost
- Compatible with PCB thicknesses of 1.60 mm & 2.40 mm
- The "eye of the needle" termination combined with a special flat rock design (easy application by pressure on insulator) make this product line very attractive



ORDERING INFORMATION

D	25	P	91C	4	PA	00LF

Series

Number of Contacts

09
15
25
37
50

Contacts

Pin	P
Socket	S

Durability

Standard class ≥200 mating/ unmating	4
High performance mating/unmating)	6

Mouting Options

Standard hole	PA
Threaded insert M3	PL
Threaded insert UNC 4-40	PX ✓
Female screw UNC 4-40	PV ✓
Harpoons + insert M3 + elec. continuity	GL
Harpoons + insert UNC 4-40 + elec. continuity	GX
Harpoons + female screw UNC 4-40 + elec. continuity	GV

RoHS Status

Standard, RoHS compatible	00LF ✓

Termination Type

Type	Code
Press-fit suitable for PCB thickness 1.6mm & 2.4mm – Europe Standard	91C
Press-fit suitable for PCB thickness 1.6mm & 2.4mm – Low Profile	90C

Preferred Option ✓

Disclaimer
Please note that the above information is subject to change without notice.

SPECIFIC DIMENSIONS

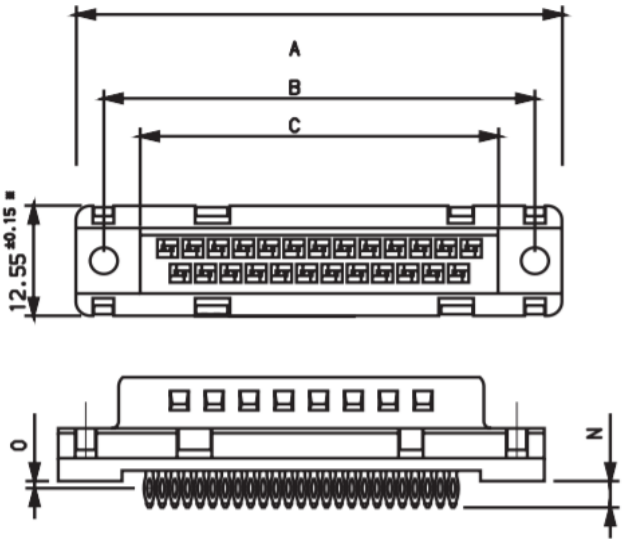

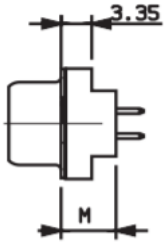

*For 50 contacts: 15.34 ± 0.15
For other dimensions, consult us

Size	A ±0,38	B ±0,12	C ±0,10
09	30.81	24.99	16.96
15	39.14	33.32	25.18
25	53.03	47.04	39.12
37	69.32	63.50	55.68
50	66.93	61.11	53.11

Termination Type	M ±0.3	N ±0.3	O ±0.2
90C	5.60	3.40	1.20
91C	6.00	3.00	0.80

PRESS-FIT FEATURES

- Application by pressure on insulator
- D-Sub insertion kit: 8646 3064 01
- Eye of the needle design

METALLIZED HOLE DIMENSIONS

			Press-fit Contacts	Press-fit Harpoons
P.C.B hole definition (note 1 and 2)		Drill diameter	Ø 1.15 ref (note 3)	Ø 3.22 ref (note 3)
		Drilled hole	Ø 1.18 – 1.2	Ø 3.19 – 3.25
		Copper plating	25µm min. (recommended 50µ max.)	25µm min. (recommended 50µ max.)
	non RoHS	Tin-lead plating	15µm max. (recommended 5µ min.)	15µm max. (recommended 5µ min.)
		Finish hole (after reflow)	Ø 0.94 – 1.09	Ø 3.02– 3.20
	RoHS	Tin plating	0.8 to 1.2µm	0.8 to 1.2µm
		Finish hole (after reflow)	Ø 1.00 – 1.09	Ø 3.08 – 3.20

Note 1: These dimensions must be respected to ensure press-fit pin performance
Note 2: According to IEC-352-S specification
Note 3: Vital requirement for press-fit pin performance

PRESS-FIT PERFORMANCE

	Press-fit Contacts	Press-fit Harpoons
Insertion force	≤100 N	≤120 N
Extraction force	≥30 N	≥30 N

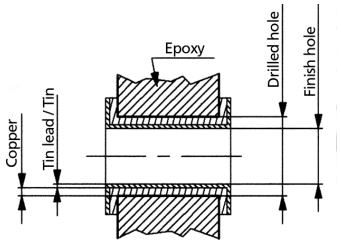

Disclaimer
Please note that the above information is subject to change without notice.

FULL POWER RIGHT ANGLE AND STRAIGHT PRESS–FIT

UL RECOGNISED FILE E66906

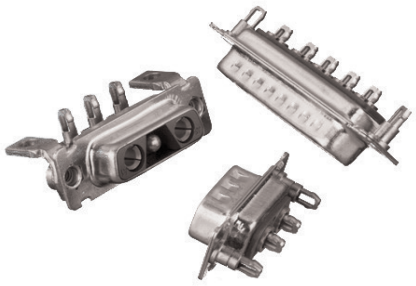

ORDERING INFORMATION

D	E	L	2 V 2 3 V 3 3 W 3 5 W 5 8 W 8	P	93C	5	G	40LF
Series	Shell Size (tin plated): E, A, B, C		Layouts					

Front Accessory					
	Blank	L	O	I	V
Straight version		X	X		X
Right angled	X	X	X		X

X: Available
Blank: without accessory
L: Threaded insert M3
O: Threaded insert UNC 4–40
I: Female screw UNC M3
V: Female screw UNC 4–40





Contacts	
Pin	P
Socket	S

Termination Type	
Straight version	93C
Right angled / Europe standard	81C
Right angled / US standard (5W1, 9W4 non available)	80C

Durability	
200 mating/unmating	5
500 mating/unmating	6

Power Contacts	
Fitted with power contacts 30A RoHS compatible	30LF
Fitted with power contacts 40A RoHS compatible	40LF

PCB Accessory			
	M	G	A
Straight version		X	
Right angled	X		X

X: Available
A: Without accessory
G: Harpoon used for PCB thickness from 1.6mm
M: Metal brackets without harpoon

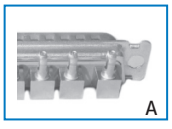



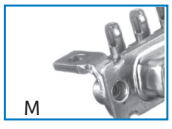

Disclaimer
Please note that the above information is subject to change without notice.

SPECIFIC DIMENSIONS

METALIZED HOLE DIMENSIONS

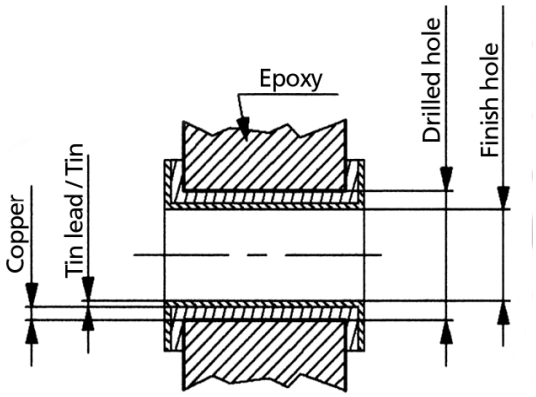

Termination Type			Press-fit Contacts	Press-fit Harpoons	
P.C.B hole definition (note 1 and 2		Drill diameter	Ø 3.22$^{\pm 0.03}$	Ø 3.22$^{\pm 0.03}$	Ø 3.22±0.03
		Drilled hole	Ø 3.19 – 3.25	Ø 3.19 – 3.25	
		Copper plating	25µm min. (recommended 50µ max.)	25µm min. (recommended 50µ max.)	
	non RoHS	Tin-lead plating	15µm max. (recommended 5µ min.)	15µm max. (recommended 5µ min.)	
		Finish hole (after reflow)	Ø 3.02 – 3.20	Ø 3.02 – 3.20	
	RoHS	Tin plating	0.8 to 1.2µm	0.8 to 1.2µm	
		Finish hole (after reflow)	Ø 3.08 – 3.20	Ø 3.08 – 3.20	

Note 1: These dimensions must be respected to ensure press-fit pin performance
Note 2: According to IEC-352-S specification
Note 3: Vital requirement for press-fit pin performance

PRESS-FIT PERFORMANCE

	Press-fit Contacts	Press-fit Harpoons
Insertion force	≤200 N (average insertion 160 N)	≤200 N (average insertion 160 N)
Extraction force	≥30 N	≥30 N

Disclaimer
Please note that the above information is subject to change without notice.

TECHNICAL INFORMATION

PHYSICAL CHARACTERISTICS

- Insulator Material: PBT color black
- Contact Material: Phosphor bronze
- Grounding Device Material: Brass
- Accessories: Brass

ELECTRICAL CHARACTERISTICS

- Maximum Rating Current: 5A at 20°C / 2.5A at 70°C
- Nominal Current: 5A (Standard conditions)
- Contact Resistance:
  - Straight terminations: <10mΩ
  - Right Angled Termination:
    - <25mΩ for 9 To 37 way
    - <35mΩ for 50 way
- Voltage Proof: >1000 V.r.m.s.
- Rated Voltage: 300 V.r.m.s.
- Insulation Resistance: >5000mΩ
- Creepage and Clearance Distance: >1mm
- Average Wiping Length: 2mm

MECHANICAL CHARACTERISTICS

- RETENTION AGAINST TORQUE:
  - Threaded insert: 0.7 N.m Maximum from front side
  - Threaded insert: 0.3 N.m maximum from rear side
    0.25N.m minimum from rear side
  - Insert L: Threaded M3
  - Insert X: Threaded UNC 4.40
  - Female Screw Lock: 0.5 N.m max. from front side
  - Female Screw V Threaded UNC 4.40
  - Female Screw I Threaded M3
- Insertion and Withdrawal Force: <n x 3.40 N (n number of cts)
- Gauge Retention Force: >0.20 N (Gauge PM)
- Thickness Gauge Ø: 0.99±0.005 / Surface Roughness: Ra=0.10µ
  mini– 0.25µ maxi
- Contact Retention In Insulator:
  - Mini 16N for straight contact
  - Mini 20N for right angled contact
- Vibrations: 10–2000Hz / 1.5 mm – 20g /3 x 2 HRS
- Interruption: <1µs (Not applicable for PL3)
- Shock: ACC. HALF SINE 50g– 11m.s–6x3 Shocks
- Interruption: <1µs

PACKAGING

- Tray & Bulk pack (jack connectors, plug connector components)
- Tape & Reel (right angle Pin–in–Paste jack connectors)
- Single Kit (plug connector components)
- Carton (cable assemblies)

TARGET MARKETS/APPLICATIONS



Asymmetric Digital Subscriber Line (ADSL)
Base Station
Switching
Transmission



Set–top Box



Desktop and Laptop
Storage System
Router and Server



Automotive Diagnostics
Control Drives
Energy Meter
Gaming Machine
Test Equipment
Office Automation
POS & Handheld terminal
Power Supplies
Parking Meter
Printer and Copier
Renewable Energy
Robotics
Surveillance Camera
Avionics



Medical Instrument



Military Equipment

INODSUBPFC0921EA4

Disclaimer
Please note that the above information is subject to change without notice.

D–Sub Mixed and Full Power DW Series

Amphenol's FCI D–Sub connectors are part of an industry standard for applications requiring robust and reliable connectors. These proven D–Sub connectors are one of the most popular Input/Output interconnects, addressing a wide variety of applications in Telecommunications, Data, Consumer, Industrial, Military, Instrumentation and Medical. Since many years Amphenol FCI has been offering a wide range of D–Sub connectors to meet various design requirements including those in harsh environment.

Amphenol FCI offers full power and mixed power versions which has been specifically developed for power applications in industrial and telecom market segment. PC board connectors are delivered with preloaded power contacts (10 – 40A). Cable crimp and solder power contacts are delivered with colour code plastic clips for an easy wire gauge identification.



TARGET MARKETS



FEATURES

- Power connectors available in various layouts from 2V2 to 36W4
- Power connectors available in full power and in mixed layout (signal + power)
- Contacts available from 10A to 75A
- Available in Straight, Angle, Solder Bucket, Crimp terminations
- Various PCB and Panel mounting accessory options available
- Hoods available in plastic, metalized and metallic form with locking screws
- Lead–free and RoHS compliant

BENEFITS

- Various layout options with in the standards shell size
- Can meet both standard and Power connector requirements
- Can meet medium to high power requirements
- Support both PCB & Cable mounting requirements
- Wide variety of choices for secure connection
- Supports cable connection; Prevents risks of pulling up and accidental un–mating
- Meets environmental, health and safety requirements

GENERAL CHARACTERISTICS

LAYOUTS

• Male insulator front view

Shell size	Layout	
E	5W1	
A	11W1	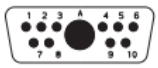
	7W2	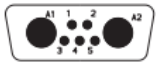
	3W3	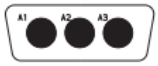
	3V3	
B	21W1	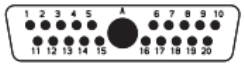
	17W2	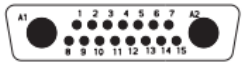
	13W3	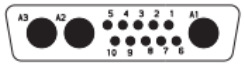
	9W4	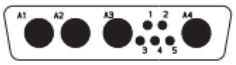
	5W5	

Shell size	Layout	
C	25W3	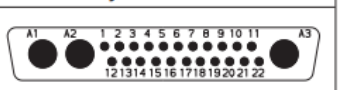
	21WA4	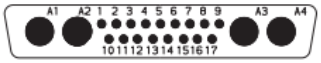
	27W2	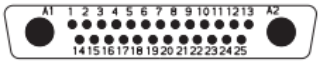
	8W8	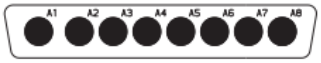
D	47W1	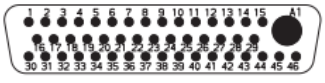
	24W7	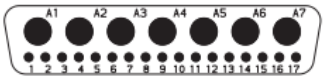
	36W4	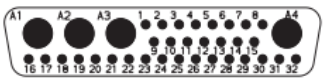

● Standard contacts

● Coaxial and power contacts

Disclaimer
Please note that the above information is subject to change without notice.

DERATING CURVES

DERATING CURVE ON CONNECTOR DC8W8SA00LF

• Fitted with contacts 8638PSC4005LF (female) (I=40A)

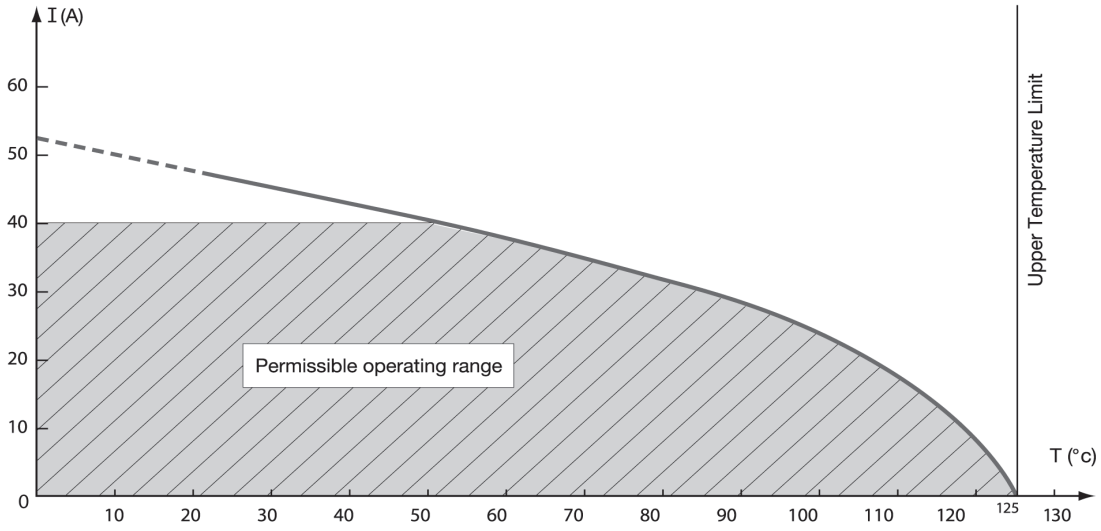

DERATING CURVE ON CONNECTOR DB13W3PA00LF

• Fitted with power contacts 8638PPS2005LF (I=20A)
(I signal contacts=7,5A)

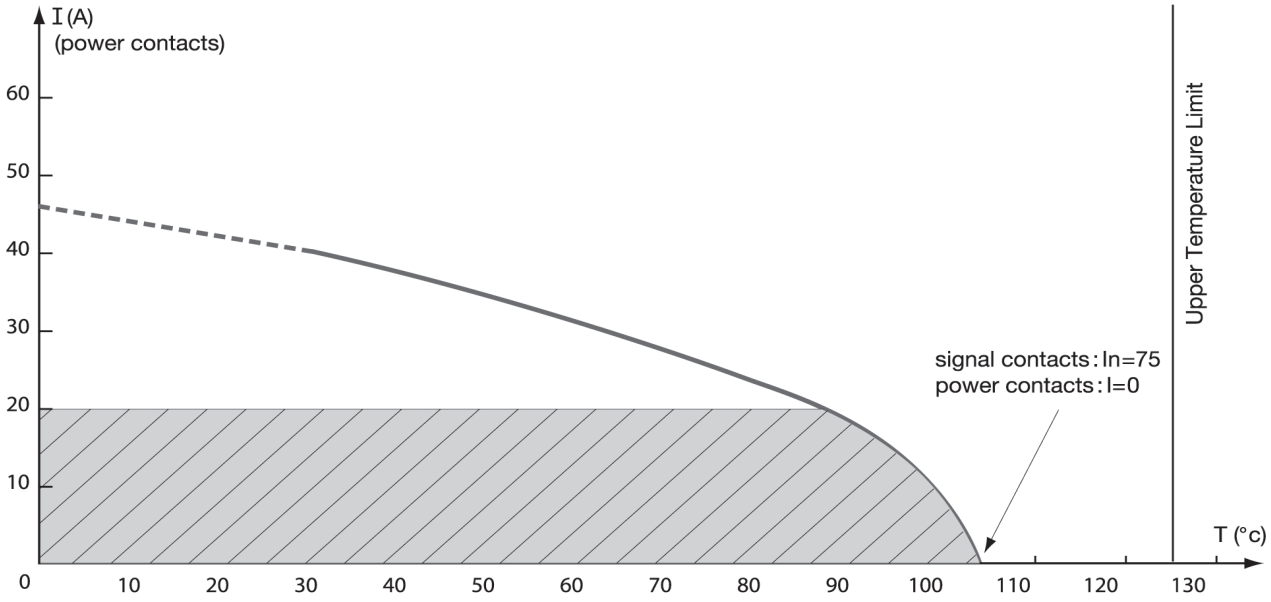

Disclaimer
Please note that the above information is subject to change without notice.

DIMENSIONS

PC BOARD DRILLING

SOLDER TERMINATION			
VERSION	STEP	30A	40A
		Ø A	
3	2.84	Ø 2 .40±0.10	Ø 3.10±0.10
7	2.84	Ø 2.40±0.10	
5	2.84	Ø 2.40±0.10	Ø 3.10±0.10

5W1
(09)

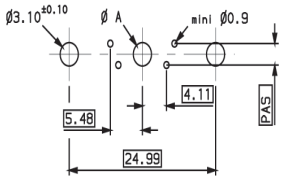

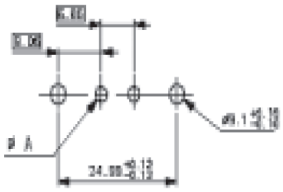

11W1
(15)

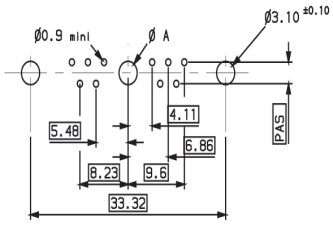

7W2
(15)

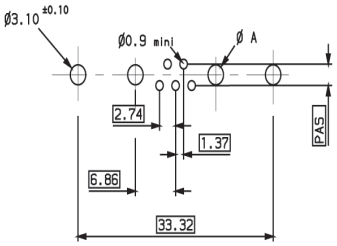

3V3
3W3
(15)

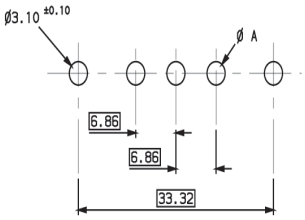

21W1
(25)

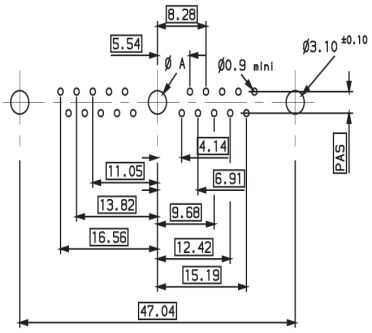

17W2
(25)

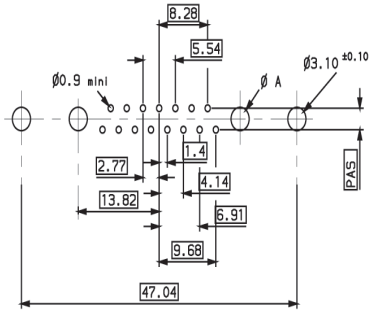

5W5
(25)

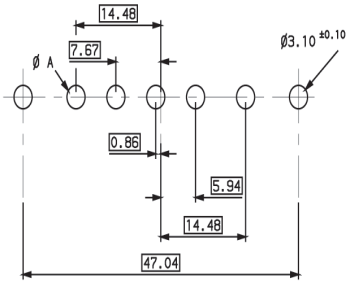

13W3
(25)

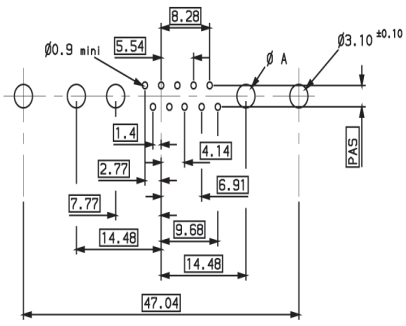

9W4
(25)

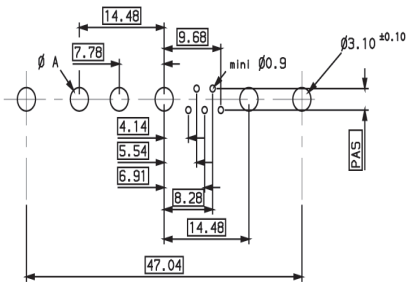

Disclaimer
Please note that the above information is subject to change without notice.

DIMENSIONS

PC BOARD DRILLING

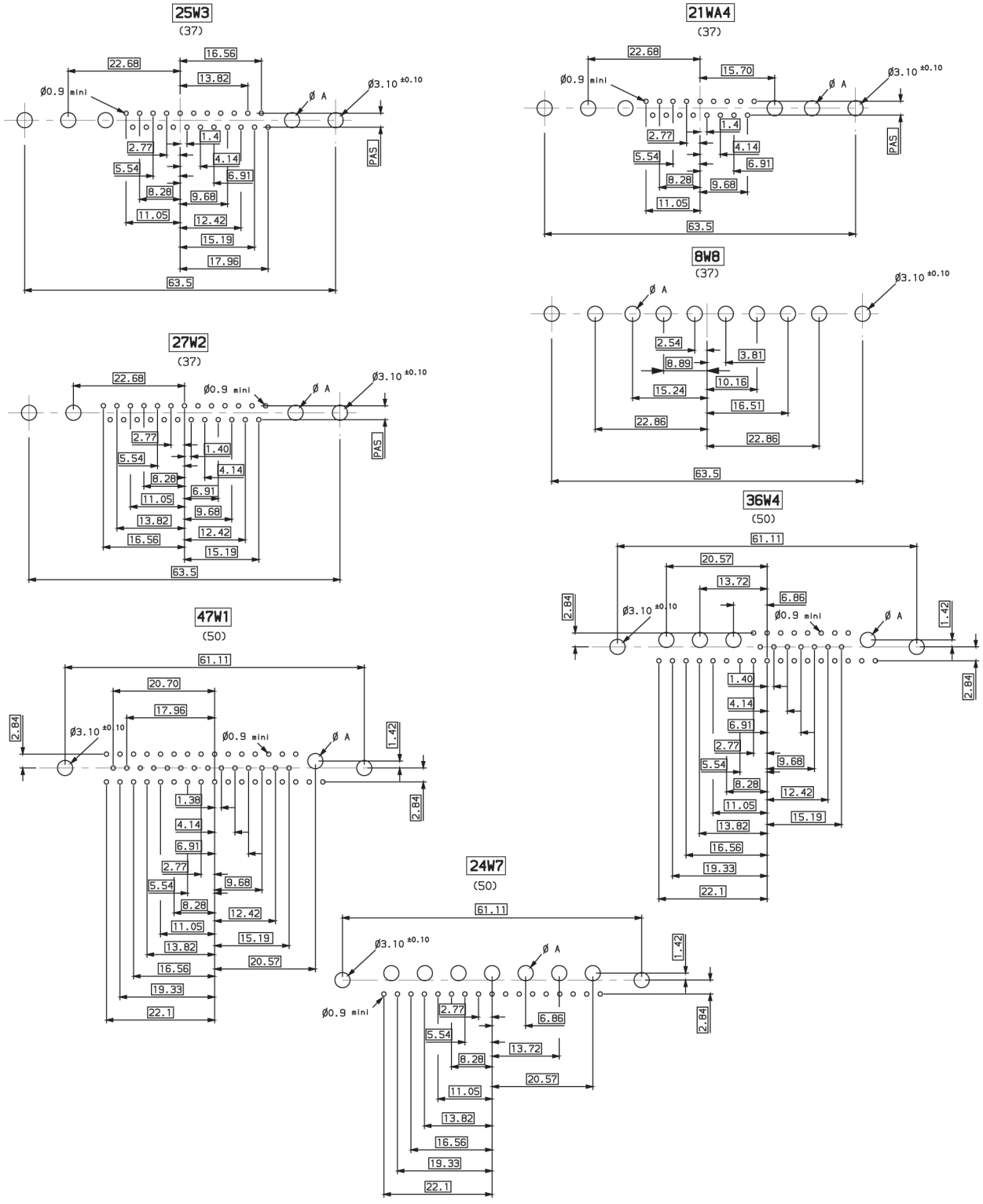

Disclaimer
Please note that the above information is subject to change without notice.

FULL POWER RIGHT ANGLE SOLDER TO BOARD

UL RECOGNISED FILE E66906 (R)

• This monobloc insulator design with stamped and formed signal contacts combines performance and cost effectiveness



ORDERING INFORMATION

D	3 W 3 5 W 5	P	36A	6	GX	08LF
Series	Layouts	Contacts		Durability		Power contacts: Fitted with power contacts 30A, RoHS compatible

Contacts	
Male	P

Durability	
High performance class (≤500 mating/unmating)	6

Type	Foot Print	Length of Termination	PCB Thickness	Code
Right angle, US standard, solder	8.08mm	2.50mm	1.6	36A

Preferred Option ✓

Mounting Options	
Harpoons + insert M3 + elec. continuity	GL
Harpoons + insert UNC 4–40 + elec. continuity	GX ✓
Harpoons + female screw UNC 4–40 + elec. continuity	GV ✓

SPECIFIC DIMENSIONS

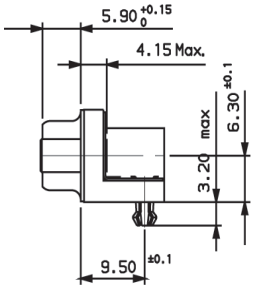

3W3

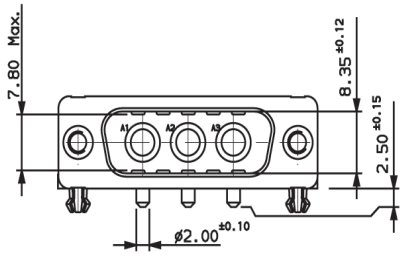

5W5

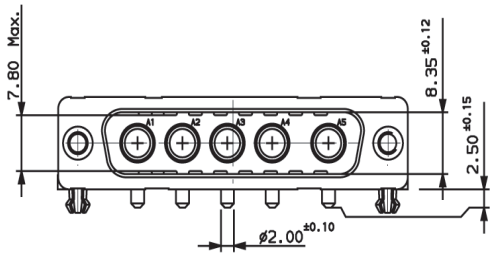

Disclaimer
Please note that the above information is subject to change without notice.

STRAIGHT AND RIGHT ANGLE PC BOARD VERSIONS

UL RECOGNISED FILE E66906

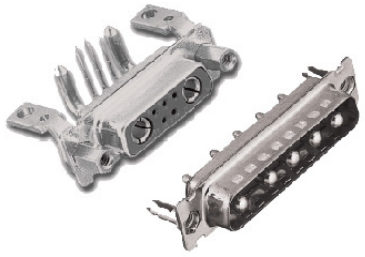

ORDERING INFORMATION

D	B	L	13	W	3	P	3	00	G	30LF

Series

Shell size (tin plated):
E, A, B, C, D
(only straight version)

Layout of contacts for right angled versions, 47W1, 24W7, 36W4 non available

Option 1

	Blank	L	O	I	V
Straight version		X	X	X	X
Right angled	X	X	X	X	X

X: Available
Blank: without accessory
L: Threaded insert M3
O: Threaded insert UNC 4–40
I: Female screw UNC M3
V: Female screw UNC 4–40

Contacts

Pin	P
Socket	S

Termination Type

Straight version	3
Right angled / Europe standard	5
Right angled / US standard (5W1, 9W4 non available)	7

Durability

200 mating/unmating	00
500 mating/unmating	43

Power Contacts

Fitted with power contacts 30A RoHS compatible	30LF
Fitted with power contacts 40A RoHS compatible	40LF
Without power contacts, RoHS compatible	00LF

Option 2

	A	H	G	M
Straight version	X	X	X	
Right angled	X	X	X	X

X: Available
A: Without accessory on PCB
H: Locking device used for PCB thickness 2.4mm
G: Locking device used for PCB thickness 1.6mm
M: Metal bracket

Disclaimer
Please note that the above information is subject to change without notice.

SPECIFIC DIMENSIONS

STRAIGHT VERSION

I	30A	40A
Ø A	2.0	2.8

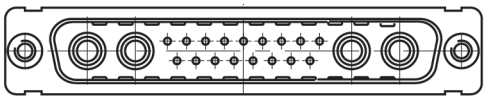

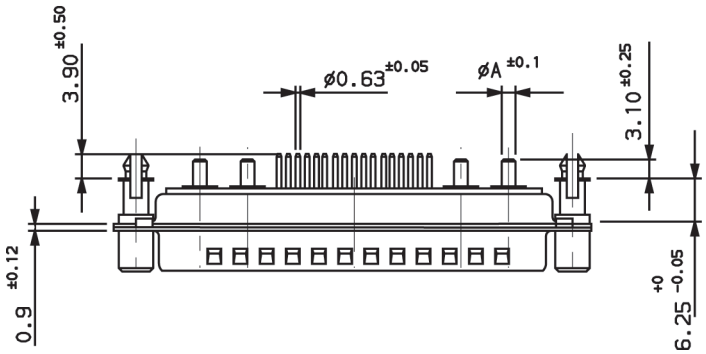

RIGHT ANGLE VERSION

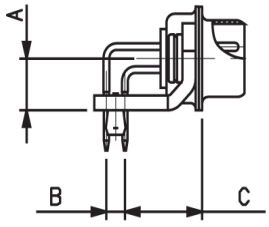

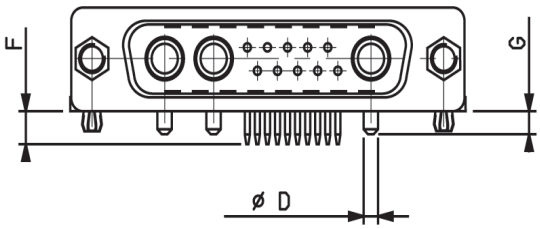

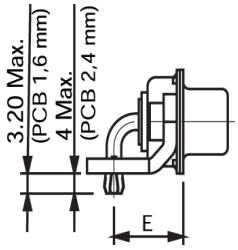

	Termination Type	Amp.	A ±0.10	B ±0.20	C ±0.20	D ±0.10	E ±0.20	F ±0.50	G ±0.30
Europe	5...	30A	7.20	2.54	10.30	2.00	11.65	4.00	3.60
		40A	7.20	2.54	10.30	2.80	11.65	4.00	3.60
U.S	7...	30A	6.30	2.84	8.08	2.00	9.50	3.90	3.60

Disclaimer
Please note that the above information is subject to change without notice.

µTCA – HIGH POWER I/O PCB CONNECTORS

OVERVIEW

This power module I/O connectors for 48V applications are designed in accordance with µTCA specifications. The robust D–Sub concept based on simplified and cost effective Delta D design combines power contacts able to handle up to 24A with signal contacts. PCB connectors are proposed in traditional solder–to–board and Pin–in–Paste versions for optimized applied cost. Specific to the design of Amphenol FCI is the fact that the connector's compact footprint allows for more space on the PCB for other components.



FEATURES

- 48V / 24A (shell size A)
- FMLB (First Mate Last Brake) functionality for hot plugging
- Field reparable

ORDERING INFORMATION

10070158	002	12	X	LF

LF: RoHS compatible, EU directive 2002/95/EC

10070158: µTCA 48V / 24A power board connector

Description	
Dual solder–to–board	001
Dual Pin–in–Paste	002
Single solder–to–board	003
Single Pin–in–Paste	004

Packaging	
Tape and Reel packing	12
Card box packing	19

Mounting Options	
M3 threaded insert	L
UNC 4–40 threaded insert	X

Disclaimer
Please note that the above information is subject to change without notice.

µTCA – HIGH POWER I/O PCB CONNECTORS

PRODUCT DRAWING

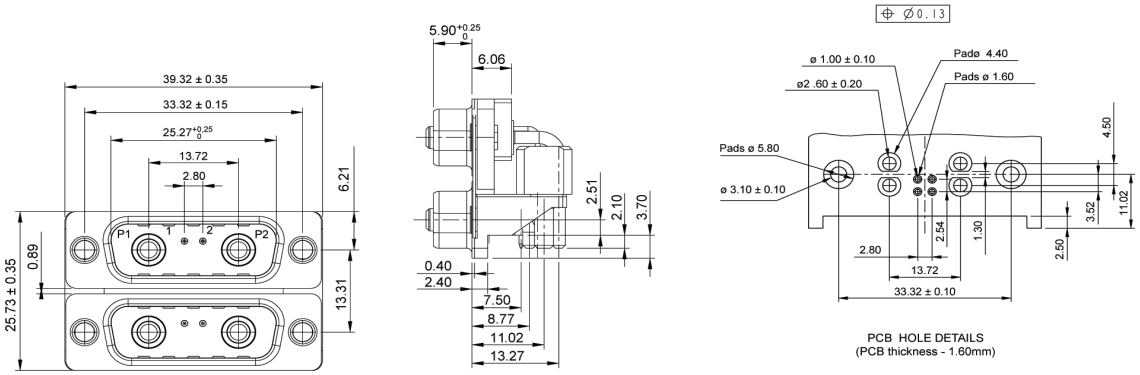

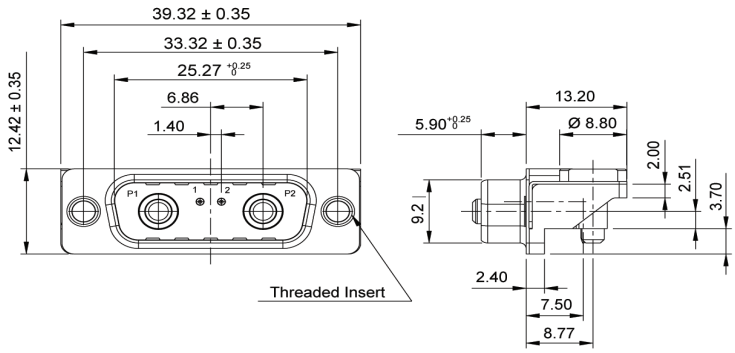

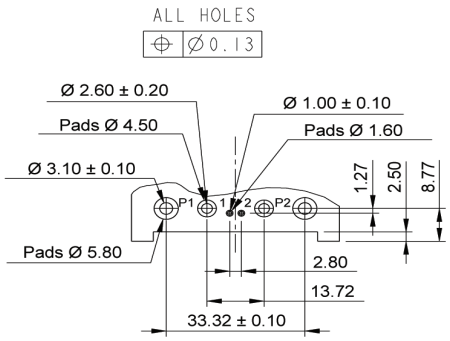

Disclaimer
Please note that the above information is subject to change without notice.

µTCA – HIGH POWER I/O CABLE CONNECTORS

FEATURES

- Field reparable
- Touch proof
- Stackable hoods with high retention devices
- Cost saving jumper option for signal contacts



ORDERING INFORMATION

10070165	001	19ALF
µTCA 48V / 24A power board connector		

Description	
Without jumper	001
With jumper option	002

Packaging
Card box packing

POWER CONTACTS

Description	Part Number
30A crimp contacts	8638PSC3005LF
40A solder bucket contacts	8638PSS4005LF

PRODUCT DRAWING

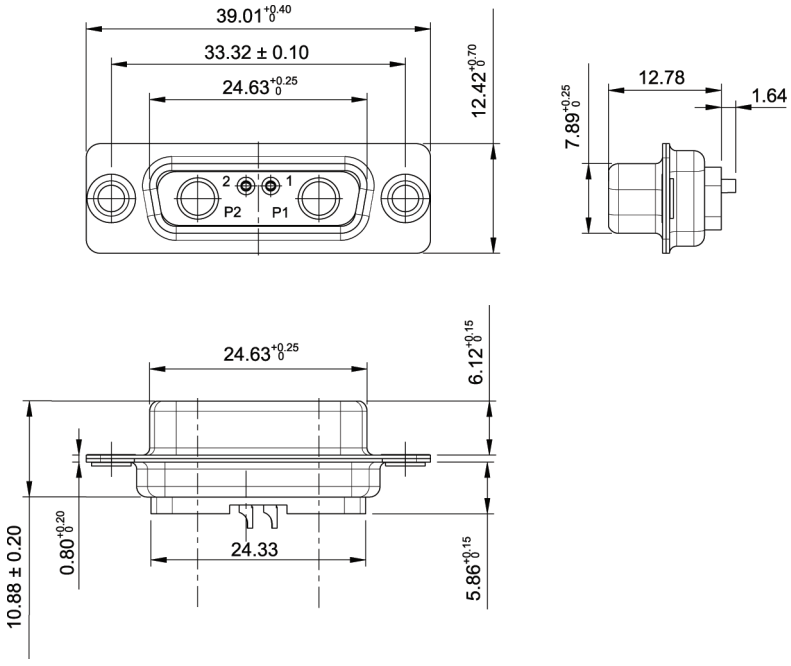

Disclaimer
Please note that the above information is subject to change without notice.

µTCA – HIGH POWER I/O CABLE CONNECTORS

HOOD (STACKABLE HOOD AND SLIM DESIGN)

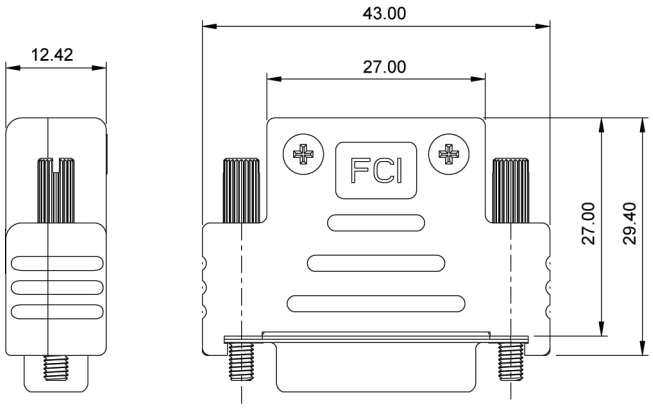

Description	Part Number
HOOD (stackable hood and slim design)	10070163 – 001LF

Disclaimer
Please note that the above information is subject to change without notice.

D–Sub Military Products – DM Series

Amphenol's FCI D–Sub connectors are part of an industrystandard for applications requiring robust and reliable connectors. These proven D–Sub connectors are one of the most popular Input/Output interconnects, addressing a wide variety of applications in Telecommunications, Data, Consumer, Industrial, Military, Instrumentation and Medical. Since many years Amphenol FCI has been offering a wide range of D–Sub connectors to meet various design requirements including those in harsh environment.

These high performance connectors are designed for severe environment applications in the field of Telecommunications – data transmission, private automatic branch switching... Connectors for Aerospace, military (125°C) class and for particularly severe applications, especially high temperature (+155°C) class available. It features machined contacts and is available with solder bucket, straight spills, angled spills and wire wrap terminations.



TARGET MARKETS



FEATURES

- Military grade machined contact connectors
- Available in Straight, Angle, Wire Wrap, Solder Bucket, Crimp terminations
- Various PCB and Panel mounting accessory options available
- Cadmium plated shells,Green insulators & colour coded Crimp contacts
- Hoods available in plastic, metalized and metallic form with locking screws

BENEFITS

- Suitable for high performance Aero–Mil applications
- Support both PCB & Cable mounting requirements
- Wide variety of choices for secure connection
- Comply with MIL–C–24308 standard
- Supports cable connection; Prevents risks of pulling up and accidental un–mating

DM SERIES HE 501

UL RATING PRODUCT E66906

- For aerospace, military 125° class–European standard in compliance with NFC 93425/HE 501
- Shell plating: Cadmium
- Military and Aero applications



ORDERING INFORMATION

D	B	M	L	25	P	5	00	M

Series: D*M

Shell Size
E
A
B
C
D

Characterisation of Military series

Number of Contacts
09
15
25
37
50

Plating	
Standard = Gold/Nickel (Blank for solder bucket termination)	00
Please consult us	Others

Termination	
Solder buckets	Blank
Straight solder spills	3
Angled solder spills	5
Wire wrap (3 levels)	4

Options 1	
Standard mounting hole (Ø = 3.10)	Blank
Threaded insert M3	L
Float mounting	F

Contacts	
Pin	P
Socket	S

Options 2	Version	
	Angled Spills	Other Terminations
Blank	Plastic bracket	Not applicable
C	Without brackets	Not applicable
M	Metal brackets	Not applicable

Disclaimer
Please note that the above information is subject to change without notice.

DM SERIES HE 501

SPECIFIC DIMENSIONS

SOLDER BUCKETS

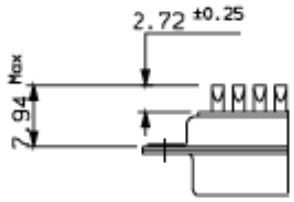

STRAIGHT SPILLS

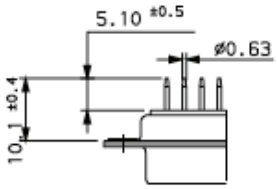

WIRE WRAP

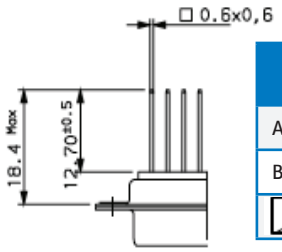

	Amphenol FCI
A	12.70 ± 0.5
B	18.40 max.
	0.79 x 0.87

RIGHT ANGLE SPILLS

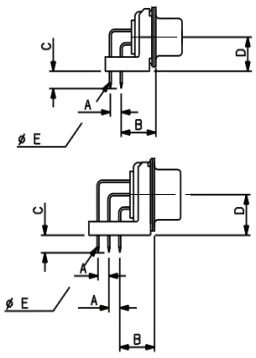

CROSS REFERENCE LIST FOR THE MAIN HE 501 AND AMPHENOL FCI

Connector Type			HE 501	Amphenol FCI
Solder Buckets	Standard	M	HE 501 N..AP3	D.M..P
		F	HE 501 N..AS3	D.M..S
	Float mounting	M	HE 501 F..AP3	D.M..P
		F	HE 501 F..AS3	D.M..S

Connector Type			HE 501	Amphenol FCI
Straight spills	Standard	M	HE 501 N..YP4.3	D.M..P 300
		F	HE 501 N..YS4.3	D.M..S 300
	Float mounting	M	HE 501 F..YP4.3	D.MF..P 300
		F	HE 501 F..YS4.3	D.MF..S 300

Connector Type			HE 501	Amphenol FCI
Wire wrap 3 levels	Standard	M	HE 501 N..KP3.3	D.M..P 400
		F	HE 501 N..KS3.3	D.M..S 400
	Float mounting	M	HE 501 F..KP3.3	D.MF..P 400
		F	HE 501 F..KS3.3	D.MF..S 400

Connector Type			HE 501	Amphenol FCI
Angled spills 500	Standard	M	HE 501 P..VP6.3	D.M..P 500
		F	HE 501 P..VS6.3	D.M..S 500
	Metal brackets	M	HE 501 M..VP6.3	D.M..P 500M
		F	HE 501 M..VS6.3	D.M..S 500M

Dimension	Termination
	5
A	2.54
B ±0.1	10.30
C ±0.5	4.00
D ±0.1 9 to 37 contacts	7.20
50 contacts	8.60
Ø E	0.63

Disclaimer
Please note that the above information is subject to change without notice.

DM SERIES HE 508

UL RATING PRODUCT E66906

- For particularly severe applications, especially high temperatures class + 155°C in compliance with NFC 93425 / HE 508
- Shell plating: Cadmium
- Military and Aero applications



ORDERING INFORMATION

D	B	M	LF	25	P	5	00	M	N	Obligatory for HE 508	N

Series: D*M

Shell Size
E
A
B
C
D

Characterisation of Military series	M

Number of Contacts
09
15
25
37
50

Plating	
Standard = Gold/Nickel (Blank for solder bucket termination)	00
Please consult us	Others

Termination	
Solder buckets	Blank
Straight solder spills	3
Angled solder spills	5
Wire wrap (3 levels)	4

Options 1	
Standard mounting hole (Ø = 3.10)	Blank
Float mounting	F

Contacts	
Pin	P
Socket	S

Options 2		
Option	Version	
	Angled Spills	Other Terminations
Blank	Plastic bracket	Not applicable
C	Without brackets	Not applicable
M	Metal brackets	Not applicable

Disclaimer
Please note that the above information is subject to change without notice.

DM SERIES HE 508

SPECIFIC DIMENSIONS

SOLDER BUCKETS

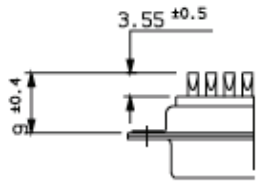

STRAIGHT SPILLS

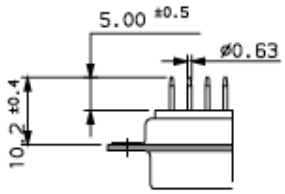

WIRE WRAP

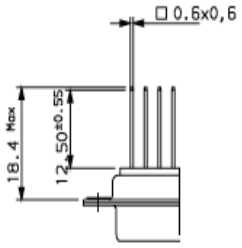

3 Levels
Diagonale 0.79 – 0.87

RIGHT ANGLE SPILLS

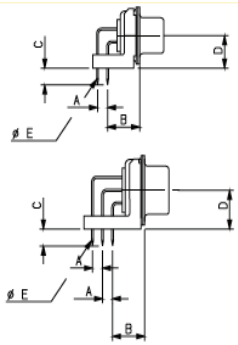

CROSS REFERENCE LIST FOR THE MAIN HE 501 AND AMPHENOL FCI

Connector Type			HE 508	Amphenol FCI
Solder Buckets	Standard	M	HE 508 N..AP	D.M..PN
		F	HE 508 N..AS	D.M..SN
	Float mounting	M	HE 508 F..AP	D.MF..PN
		F	HE 508 F..AS	D.MF..SN

Connector Type			HE 508	Amphenol FCI
Straight spills	Standard	M	HE 508 N..YP4	D.M..P 300N
		F	HE 508 N..YS4	D.M..S 300N
	Float mounting	M	HE 508 F..YP4	D.MF..P 300N
		F	HE 508 F..YS4	D.MF..S 300N

Connector Type			HE 508	Amphenol FCI
Wire wrap 3 levels	Standard	M	HE 508 N..KP3	D.M..P 400N
		F	HE 508 N..KS3	D.M..S 400N
	Float mounting	M	HE 508 F..KP3	D.MF..P 400N
		F	HE 508 F..KS3	D.MF..S 400N

Connector Type			HE 508	Amphenol FCI
Angled spills 500	Standard	M	HE 508 P..VP6	D.M..P 500N
		F	HE 508 P..VS6	D.M..S 500N
	Metal	M	HE 508 M..VP6	D.M..P 500MN
		F	HE 508 M..VS6	D.M..S 500MN

Dimension	Termination
	5
A	2.54
$B^{\pm 0.1}$	10.30
$C^{\pm 0.5}$	4.00
$D^{\pm 0.1}$ 9 to 37 contacts	7.20
50 contacts	8.60
Ø E	0.63

Disclaimer
Please note that the above information is subject to change without notice.

DM SERIES HE 507

UL RECOGNISED FILE E66906

- Connectors drawn from DM series. Composed of mixed arrangements
- of standard signal and size 8 cavities housing, coax, power, high voltage and optical removable contacts
- Shell plating: Cadmium
- Military and Aero applications



ORDERING INFORMATION

D	B	M		13 W 3	P	5	00	M	N

Series: D*M

Shell Size

E
A
B
C
D

Characterisation of Military series	M

Layout of contacts: see following page

Contacts

Pin	P
Socket	S

Termination

Solder buckets	Blank
Straight solder spills	3
Angled solder spills	5
Wire wrap (3 levels)	4

Plating

Standard = Gold/Nickel (Blank for solder bucket termination)	00
Please consult us	Others

Options 1

Standard mounting hole (Ø = 3.10)	Blank
Float mounting	F

Options 2

Option	Version	
	Angled Spills	Other Terminations
Blank	Plastic brackets	Not applicable
C	Without brackets	Not applicable
M	Metal brackets	Not applicable

Compulsory in compliance with HE 507	N

Disclaimer
Please note that the above information is subject to change without notice.

LAYOUTS

MALE INSULATOR FRONT VIEW

Shell size	Layout	
E	5W1	
A	11W1	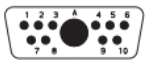
	7W2	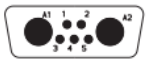
	3W3	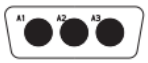
	3V3	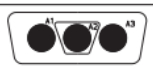
B	21W1	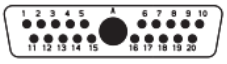
	17W2	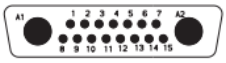
	13W3	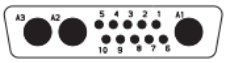
	9W4	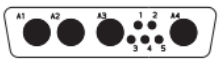
	5W5	

Shell size	Layout	
C	25W3	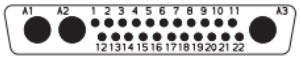
	21WA4	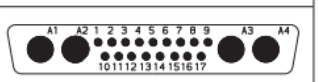
	27W2	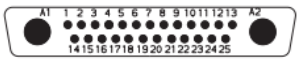
	8W8	
D	47W1	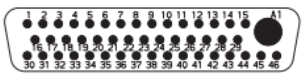
	24W7	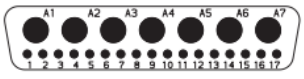
	36W4	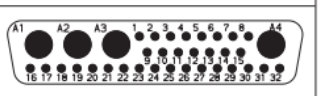

● Standard contacts

● Coaxial and power contacts

SPECIFIC DIMENSION

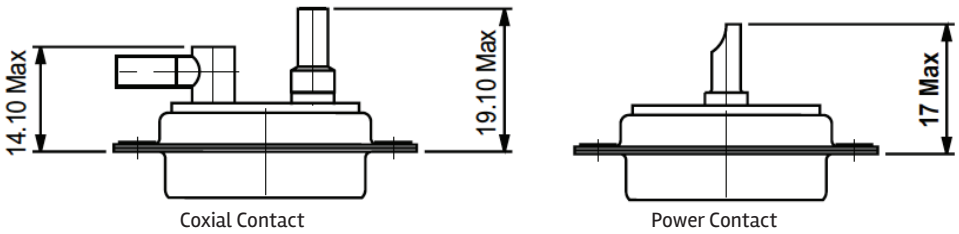

Coxial Contact

Power Contact

Disclaimer
Please note that the above information is subject to change without notice.

POWER CONTACTS

Female

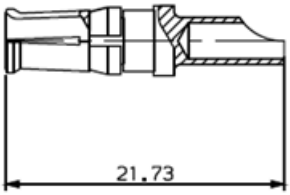

Male

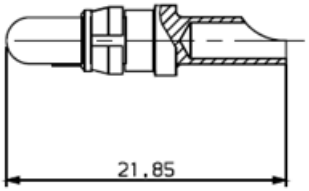

Wire Size	Max. Current	Part Numbers	
		Male	Female
AWG8	40A	8630-3098NLF	8630-3099NLF
AWG12	20A	8630-3056NLF	8630-3057NLF
AWG14	15A	8630-3060NLF	8630-3061NLF
AWG16	10A	8630-3064NLF	8630-3065NLF

HIGH VOLTAGE CONTACTS

Male 8638.2000

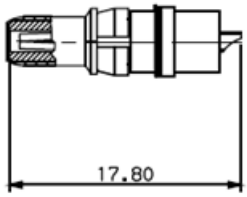

Blue

Female 8638.2001

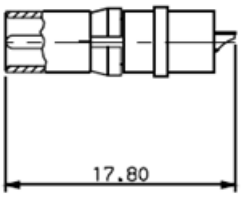

White

These removable contacts are suitable for the contact cavities of the DMW series and DW series.
The coxial contacts are in compliance with:

- NFC 93569
- KMX4 specification

MECHANICAL PERFORMANCE

- Mating Force Per Set of Contact: 3N
- Mating Endurance: 200
- Temperature: -55°C to + 125°C

ELECTRICAL PERFORMANCE

- Dielectric Withstanding Voltage: 2800 V.r.m.s
- Break Down Voltage: 3200 V.r.m.s
- Insulation Resistance: 10^6 MΩ
- Contact Resistance: ≤ 5 MΩ
- Max Current Rating: 5A
- Material: TEFLON

Disclaimer
Please note that the above information is subject to change without notice.

DM SERIES – HIGH DURABILITY, MILITARY GRADE

- For particularly high durability, Military grade applications
- 1.27µ Gold plating
- Shell plating: Cadmium



ORDERING INFORMATION

D	B	M	F	25	P	732	N

Series: D*M

Shell Size
E
A
B
C
D

Characterisation of Military series	M

Number of Contacts
09
15
25
37
50

Contacts	
Pin	P
Socket	S

Termination	
Solder buckets	Blank
Straight solder spills	3
Angled spills	7

Compulsory in compliance with HE 507	N

Options 1	
Standard mounting hole (Ø = 3.10)	Blank
Float mounting	F

Disclaimer
Please note that the above information is subject to change without notice.

SPECIFIC DIMENSIONS

Solder Buckets

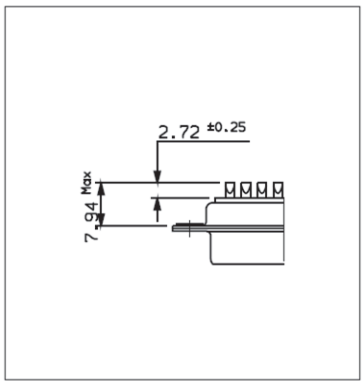

STANDARD P/N LIST
DEM09P032N
DEM09S032N
DAM15P032N
DAM15S032N
DBM25P032N
DBM25S032N
DCM37P032N
DCM37S032N
DDM50P032N
DDM50S032N

Straight Spills

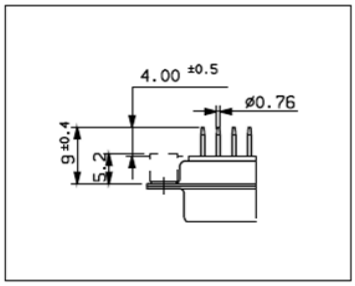

STANDARD P/N LIST
DEM09P332N
DEM09S332N
DAM15P332N
DAM15S332N
DBM25P332N
DBM25S332N
DCM37P332N
DCM37S332N
DDM50P332N
DDM50S332N

Angled Spills

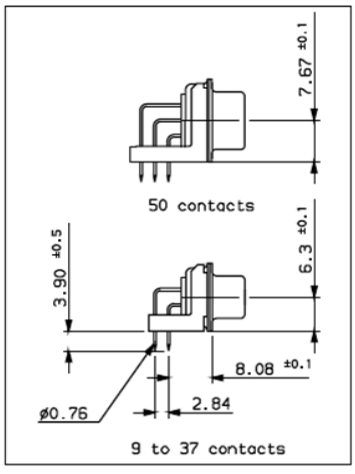

STANDARD P/N LIST
DEM09P732N
DEM09S732N
DAM15P732N
DAM15S732N
DBM25P732N
DBM25S732N
DCM37P732N
DCM37S732N
DDM50P732N
DDM50S732N

Disclaimer
Please note that the above information is subject to change without notice.

SMA SERIES – HIGH DURABILITY, MILITARY GRADE CRIMP CONNECTORS

- For particularly high durability, Military grade applications
- 1.27µ Gold plating
- Shell plating: Cadmium
- Crimp housing with Mil grade colour coded contacts packed separately



ORDERING INFORMATION

SBMA	F	25	P

Series: S*MA

Options	
Blank	Standard
F	Float Mounting

Number of Contacts
09
15
25
37
50

Contacts	
Pin	P
Socket	S

STANDARD P/N LIST
SEMA09P
SEMA09S
SAMA15P
SAMA15S
SBMA25P
SBMA25S
SCMA37P
SCMA37S
SDMA50P
SDMA50S

CONTACTS CRIMP TYPE 20/24 AWG WIRES

Male Contact

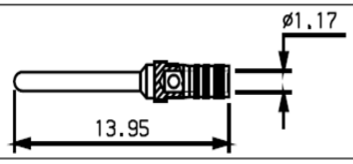

Female Contact

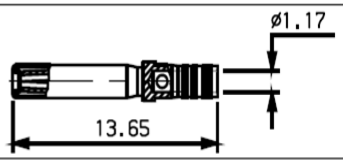

Wire size for cable	Contact	Part Number
AWG 20/24 wire size	Male	86303020A
	Female	86303022A

INODSUBMPDM092IEA4

Disclaimer
Please note that the above information is subject to change without notice.

D–Sub Accessories

WIDE RANGE OF ACCESSORIES FOR SECURE CONNECTION

Amphenol's FCI D–Sub connectors are part of industry standard and are one of the most popular Input/Output interconnects, addressing a wide variety of applications including telecommunications, industrial and medical.

- Prevents accidental mismating
- Hoods available in 9 to 50 positions for different connector pin configurations
- Metal hoods available in straight and angled terminations for EMI/RFI shielding
- Dust caps available in metal and plastic versions
- Locking screws comes with UNC 4–40 and M3 thread options



TARGET MARKETS



FEATURES

- Hoods available in plastic, metalized and metallic form with locking screws
- Hoods available in 9 to 50 positions
- Metal hoods available in straight and angled terminations
- Hoods available with cable clamps and jackscrews
- Hoods available in different orientations and locking options
- Range includes different locking devices like screw locks and lever locks
- Screws available in both UNC 4–40 and M3 thread options
- Metal and plastic dust caps

BENEFITS

- Supports cable connection and prevents risks of pulling up and accidental mismating
- Suitable for different connector pin configurations including high density series
- Suitable for EMI/RFI shielding
- Assures secure connection with required strain relief
- Supports various customization need
- Ensures secure and reliable connection
- Ensures connector intermateability
- Safeguards connector from dust and dirt when kept in unmated condition

TECHNICAL INFORMATION

TARGET MARKETS/APPLICATIONS



Asymmetric Digital Subscriber Line (ADSL)
Base Station
Switching
Transmission



Set–top Box



Desktop and Laptop
Storage System
Router and Server



Automotive Diagnostics
Control Drives
Energy Meter
Gaming Machine
Test Equipment
Office Automation
POS & Handheld terminal
Power Supplies
Parking Meter
Printer and Copier
Renewable Energy
Robotics
Surveillance Camera
Avionics



Medical Instrument



Military Equipment

Disclaimer
Please note that the above information is subject to change without notice.

PLASTIC HOODS

1 • STRAIGHT EXIT PLASTIC HOOD WITH INTEGRATED LOCKING – ECONOMICAL SERIES



- Material: Self–extinguishing UL 94 HB Thermoplastic
- Color: Grey
- Temperature Range: –55°C +105°C
- Locking Screws: UNC 4–40 thread

STRAIGHT EXIT HOOD–PLASTIC

Description	Part Numbers
Screw Thread UNC 4–40	8630CH09UNCLF
	8630CH15UNCLF
	8630CH25UNCLF
	8630CH37UNCLF
Screw Thread M3	8630CH09M3LF
	8630CH15M3LF
	8630CH25M3LF
	8630CH37M3LF

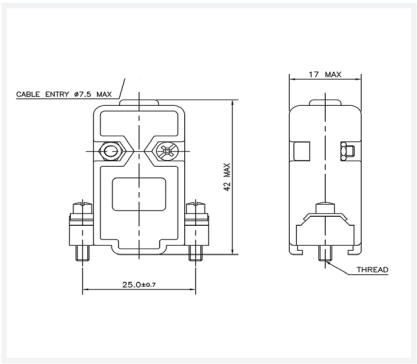

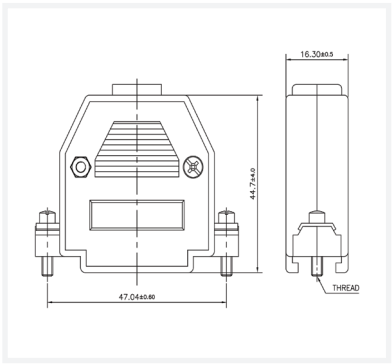

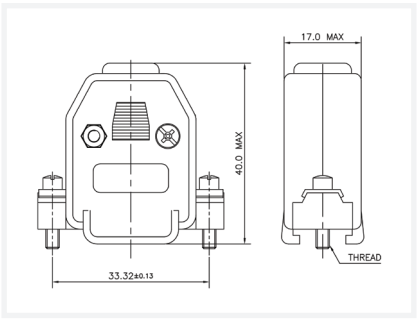

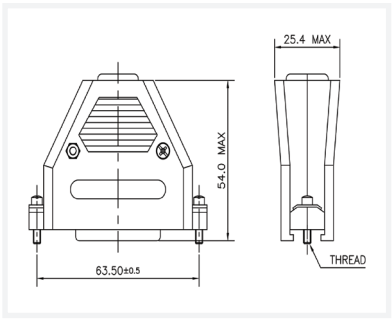

Disclaimer
Please note that the above information is subject to change without notice.

2• UNIVERSAL PLASTIC HOOD WITH METAL CLAMP FOR STRAIN RELIEF – ECONOMICAL SERIES



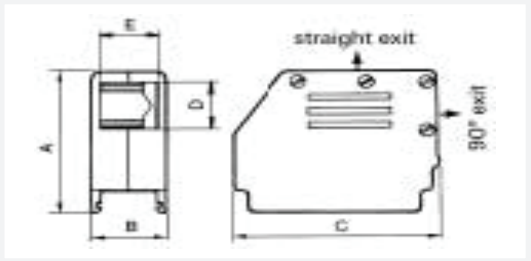

Shell Size	Part Numbers (Black Hood)	Part Numbers (Metalized Hood)	A	B	C	With Clamp			Without Clamp	
						D	E		D	E
							min.	max.		
E	863093C09ALF	863093C09MLF	29.75	15.50	24.25	6	1.90	0.10	8	11.50
A	863093C15ALF	863093C15MLF	29.75	15.50	32.50	6	1.90	0.10	8	11.50
B	863093C25ALF	863093C25MLF	46.50	15.50	46.00	13.50	2.60	0.10	16	11.50
C	863093C37ALF	863093C37MLF	46.50	15.50	60.50	13.50	2.60	0.10	16	11.50
D	863093C50ALF	863093C50MLF	46.50	18.00	56.50	15.50	4.40	12.60	18	14.00

- Material (black hood): Self–extinguishing UL94V–0 thermoplastic
- Material (metalized): Thermoplastic
- Temperature Range: –55°C +125°C
- Packaging: Individual sets

All dimensions in mm.

3• STRAIGHT EXIT “SNAP TOGETHER” PLASTIC HOOD



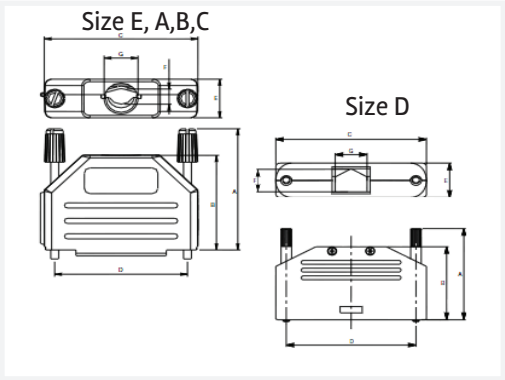

Shell Size	Part Numbers	A	B	C	D	E	With Clamp		Without Clamp		
							F		G	F	G
							min.	max.			
E (9)	86303637BLF	31.0	36.2	32.4	24.99	15	1	5.5	8.5	7	8.5
A (15)	86303638BLF	39.5	40.2	40.7	33.32	15	4	7	12	11	12
B (25)	86303639BLF	53.2	40.2	54.4	47.04	15	4	7	12	11	12
C (37)	86303640BLF	69.7	40.2	70.9	63.5	15	4	7	12	11	12
D (50)	86303641CLF	67.2	43.7	71.2	61.11	15	4	11.5	15.5	14	18

Disclaimer
Please note that the above information is subject to change without notice.

D–Sub Accessories

- Material: Nylon UL 94 V–2
- Material (size D): Thermoplastic (UL94V–2)
- Color: Black
- Temperature Range: –40°C +95°C
- Packaging: Individual sets
- Locking Screws: UNC 4–40 thread

4• ANGLE EXIT PLASTIC HOOD



Size E, A,B,C

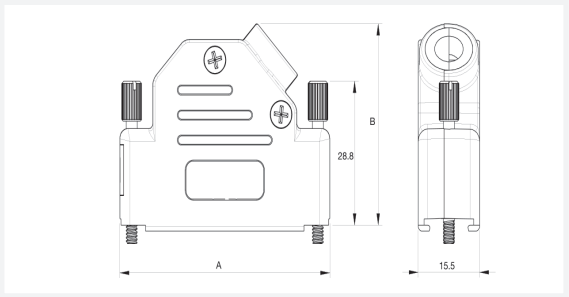

Shell Size	Part Numbers	A	B	Cable Diameter
E (9)	8655PHRA0901LF	31.0	36.2	4 to 13mm
A (15)	8655PHRA1501LF	39.5	40.2	
B (25)	8655PHRA2501LF	53.0	40.2	
C (37)	8655PHRA3701LF	69.5	40.2	

Size E

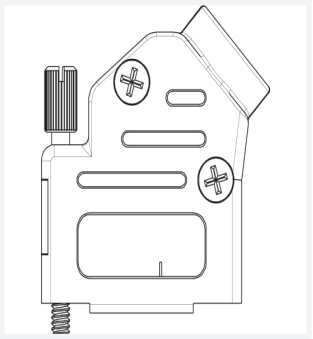

All dimensions in mm.

- Cable Strain Relief: Steel fibre reinforced polycarbonate UL94V–0
- Color: Black
- Temperature Range: –40°C +120°C
- Packaging: Bulk, in box of 100 pieces
- Locking Screws: UNC 4–40 thread

Disclaimer
Please note that the above information is subject to change without notice.

5• STRAIGHT EXIT PLASTIC HOOD WITH LONG JACK SCREW

TECHNICAL INFORMATION

- Material: UL 94 V-0 plastic
- Operating Temperature Range: -55°C to +110°C
- Cable Entry: Top
- Jack Screws: UNC 4-40 (Standard) M2.5 or M3 on request
- Cable O.D: 9-37-way: Up to 11.7mm
- Colour: Black



FEATURES

- Available in sizes 9-15-25-37
- Suitable for any common Sub-D connector
- Strain relief inserts ensure a secure termination
- Re-openable

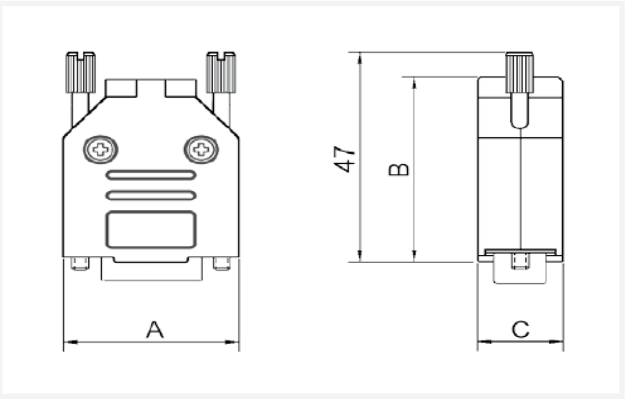

Size	Dim A	Dim B	Dim C
9-way	31.2	39.9	15.0
15-way	39.5	41.5	15.0
25-way	53.4	48.6	15.0
37-way	69.7	53.6	15.0

Grommet Sizes:

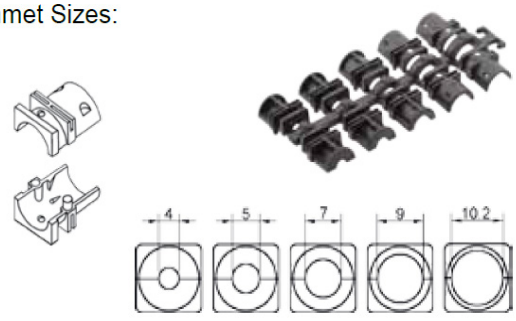

ORDERING INFORMATION

Description	Size	Part Numbers
PLASTIC HOOD 09	9-way	8655APET1A11KLF
PLASTIC HOOD 15	15-way	8655APAT1A11KLF
PLASTIC HOOD 25	25-way	8655APBT1A11KLF
PLASTIC HOOD 37	37-way	8655APCT1A11KLF

Disclaimer
Please note that the above information is subject to change without notice.

6• STRAIGHT EXIT MONOBLOCK PLASTIC HOOD FOR POTTING



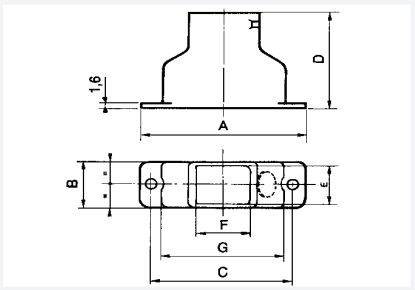

with cable tie

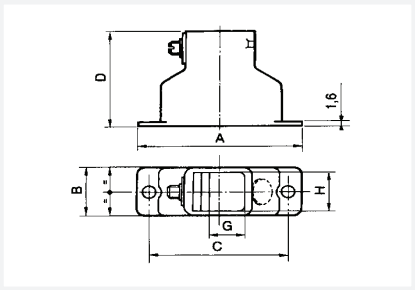

with screw and plate strain relief

Shell Size	Part Numbers		A	B	C	D	E	F	G		H
	Hood with cable tie	Hood with screw and plate							Min.	Max.	
E	863086BLF	86303920ALF	30.60	12.50	25.00	29.00	9.90	9.90	2.70	7.10	10.50
A	863021BLF	86303921ALF	38.90	12.50	33.32	29.00	9.90	11.90	4.50	9.10	10.50
B	863022BLF	86303922ALF	52.80	12.50	47.05	35.00	9.90	16.40	9.20	13.60	10.50
C	863023BLF	86303923ALF	69.10	12.50	63.50	41.00	9.90	23.40	9.20	20.60	10.50
D	863024BLF	86303924ALF	66.70	15.30	61.10	41.00	12.70	23.40	9.20	20.60	13.30

TECHNICAL INFORMATION

- Material: Self–extinguishing
- UL rated 94V–0 thermoplastic
- Operating Temperature Range: –55°C to +110°C
- Colour: Black

7• ANGLE EXIT MONOBLOCK PLASTIC HOOD FOR POTTING



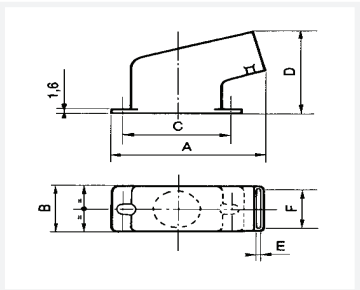

with cable tie

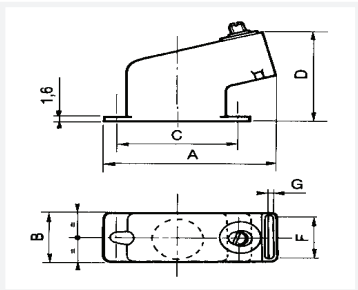

with screw and plate strain relief

Shell Size	Part Numbers		A	B	C	D	E	F	G	
	Hood with cable tie	Hood with screw and plate							Min.	Max.
E	86305002BLF	86303925ALF	30.60	12.50	25.00	26.20	10.50	10.50	2.70	7.10
A	863026BLF	86303926ALF	38.90	12.50	33.32	28.60	12.50	10.50	4.50	9.10
B	863027BLF	86303927ALF	52.80	12.50	47.05	36.40	17.00	10.50	9.20	13.60
C	863028BLF	86303928ALF	69.10	12.50	63.50	42.60	24.00	10.50	9.20	20.60
D	863029BLF	86303929ALF	66.70	15.30	61.10	41.00	24.00	13.30	9.20	20.60

Disclaimer
Please note that the above information is subject to change without notice.

METAL HOODS

8• STRAIGHT EXIT FULL METAL HOOD WITH TWO METAL CLAMPS

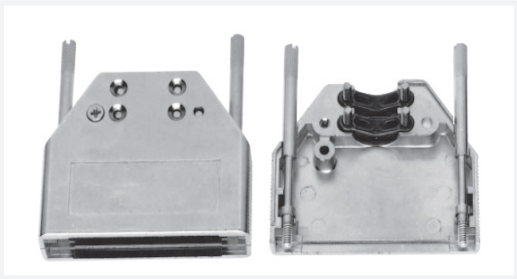

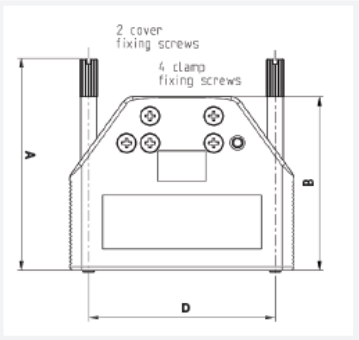

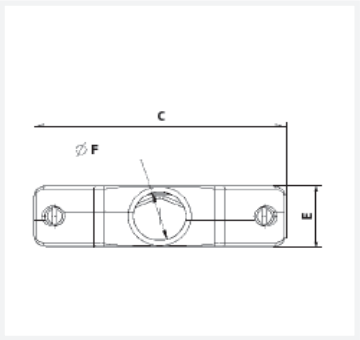

Shell Size	Part Numbers (in bulk)	Packaging	Part Numbers (in individual set)	Packaging	A± 0.1	B± 0.5	C± 0.1	D± 0.1	E± 0.2	F max.
E (9)	8655MH0901LF	80	8655MH0911LF	50	55.00	45.00	34.40	24.99	14.70	7.85
A (15)	8655MH1501LF	80	8655MH1511LF	50	55.00	45.00	42.70	33.32	14.70	11.80
B (25)	8655MH2501LF	60	8655MH2511LF	50	55.00	45.00	56.70	47.04	14.70	11.80
C (37)	8655MH3701LF	40	8655MH3711LF	50	55.00	45.00	72.95	63.50	14.70	11.80
D (50)	8655MH5001LF	40	8655MH5011LF	50	55.00	45.00	70.60	61.11	14.70	14.10

- Material: Zamack
- Plating: Nickel
- Environment: Frequencies at 100Mz > 40dB
- Corrosion Resistance: 50 Hours exposure to salt spray

9• STRAIGHT EXIT METAL HOOD WITH PLASTIC SCREW HEAD



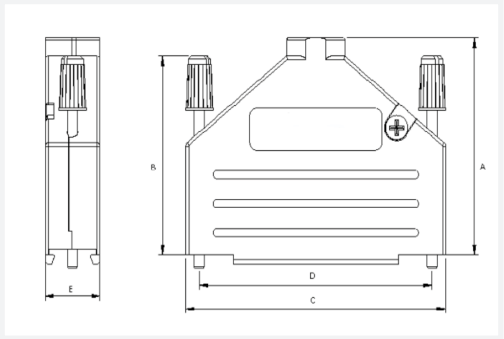

Shell Size	Part Numbers (in bulk)	A	B	C	D	E
E	8655MH0901BLF	38.3	47.3	31	24.99	14.6
A	8655MH1501BLF	40.5	47.3	39.5	33.32	14.6
B	8655MH2501BLF	47.3	47.3	53.2	47.04	14.6
C	8655MH3701BLF	52.2	47.3	70.9	63.5	15

- Material: Zamack, nickel plated
- Cable Strain Relief: Steel fiber reinforced polycarbonate
- UL94V-0 for EMI/RFI screening
- Temperature Range: -40°C +120°C
- Environment: >40dB between 30MHz and 1GHz
- Packaging: Bulk, in box of 100 pieces
- Locking Screws: UNC 4-40 thread

Disclaimer
Please note that the above information is subject to change without notice.

10• ANGLE EXIT METAL HOOD FOR CABLE EMI/RFI



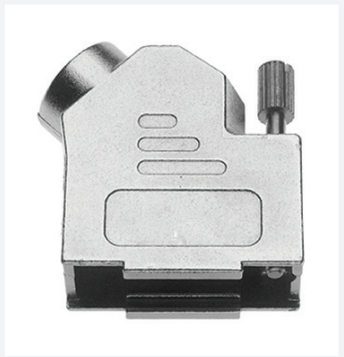

Size A,B,C

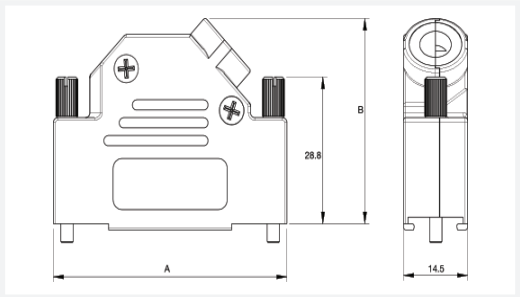

Shell Size	Part Numbers	A	B	Cable Diameter
E (9)	8655MHRA0901LF	31.0	36.2	4 to 13 mm
A (15)	8655MHRA1501LF	39.5	40.2	
B (25)	8655MHRA2501LF	53.2	40.2	
C (37)	8655MHRA3701LF	69.7	40.2	
D (50)	8655MHRA5001LF	67.2	43.7	10 to 16 mm

Size E

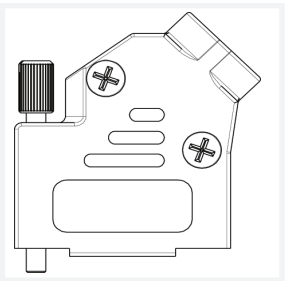

- Material: Zamack, nickel plated
- Cable Strain Relief: Steel fiber reinforced polycarbonate
- UL94V-0 for EMI/RFI screening
- Temperature Range: -40°C +120°C
- Environment: >40dB between 30MHz and 1GHz
- Packaging: Bulk, in box of 100 pieces
- Locking Screws: UNC 4-40 thread

11• STRAIGHT EXIT FULL METAL HOOD WITH LONG JACK SCREWS

TECHNICAL INFORMATION

- Material: Zinc, Nickel Plated
- Operating Temperature Range: -40°C to +120°C
- Cable Entry: Top Entry
- Jack Screws: UNC 4-40 (Standard) M2.5 or M3 on request
- Cable O.D: Up to 11.5mm (Size 9-37)
  Up to 17mm (Size 50)



FEATURES

- Available in sizes 9-15-25-37-50
- Size 50 equipped with extra cable clamp
- Excellent EMI Shielding
- Re-openable
- Strain relief inserts ensure a secure termination

Disclaimer
Please note that the above information is subject to change without notice.

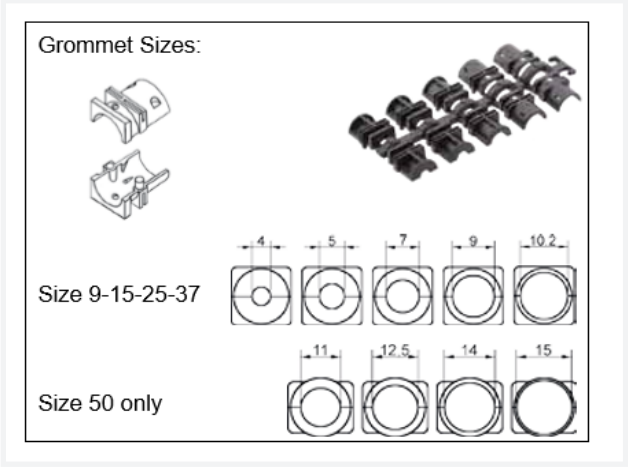

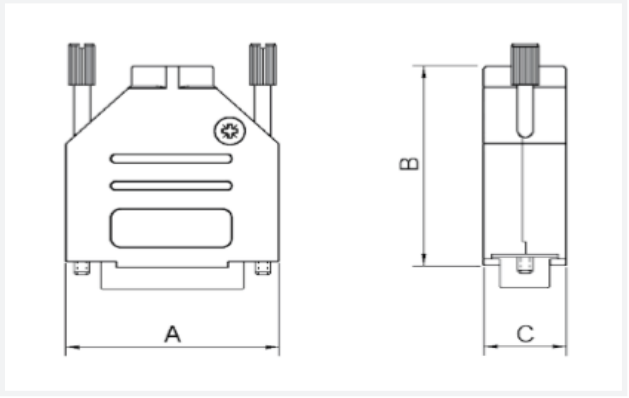

Size	Dim A	Dim B	Dim C
9-way	31.0	39.5	15.0
15-way	39.5	41.5	15.0
25-way	53.5	48.5	15.0
37-way	71.0	53.0	15.0
50-way	67.5	54.0	18.7

ORDERING INFORMATION

Description	Size	Part Numbers
DSUB METAL HOOD 09	9-way	8655AMET1A11KLF
DSUB METAL HOOD 15	15-way	8655AMAT1A11KLF
DSUB METAL HOOD 25	25-way	8655AMBT1A11KLF
DSUB METAL HOOD 37	37-way	8655AMCT1A11KLF
DSUB METAL HOOD 50	50-way	8655AMDT1A11KLF

12• STRAIGHT EXIT FULL METAL HOOD – BLACK COLOUR

TECHNICAL INFORMATION

- Material: Zinc, Black Plated
- Operating Temperature Range: -40°C to +120°C
- Cable Entry: Top Entry
- Jack Screws: UNC 4-40 (Standard) M2.5 or M3 on request
- Cable O.D: Up to 11.5mm



FEATURES

- Available in sizes 9-15-25-37
- Excellent EMI Shielding
- Re-openable
- Strain relief inserts ensure a secure termination

Disclaimer
Please note that the above information is subject to change without notice.

Grommet Sizes:

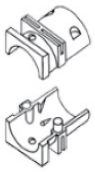



Size 9-15-25-37

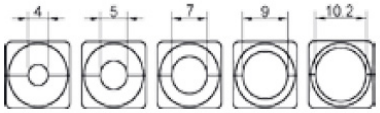

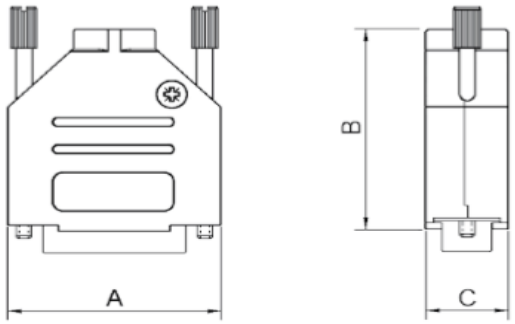

Size	Dim A	Dim B	Dim C
9-way	31.0	39.5	15.0
15-way	39.5	41.5	15.0
25-way	53.5	48.5	15.0
37-way	71.0	53.0	15.0

ORDERING INFORMATION

Description	Size	Part Numbers
DSUB METAL HOOD 09	9-way	8655AMET1A11K001LF
DSUB METAL HOOD 15	15-way	8655AMAT1A11K001LF
DSUB METAL HOOD 25	25-way	8655AMBT1A11K001LF
DSUB METAL HOOD 37	37-way	8655AMCT1A11K001LF

13• STRAIGHT EXIT FULL METAL HOOD WITH DOUBLE CLAMP STRAIN RELIEF



TECHNICAL INFORMATION

- Material: Zinc, Nickel Plated
- Operating Temperature Range: -40°C to +120°C
- Cable Entry: Top entry
- Jack Screws: 55mm, UNC 4-40
  M2.5 or M3 on request
- Cable O.D: 9-way: Up to 8.0mm
  15-way: Up to 11.6mm
  25-way: Up to 11.6mm
  37-way: Up to 11.6mm
  50-way: Up to 14.0mm

FEATURES

- Available in sizes 9-15-25-37-50
- Excellent EMI Shielding
- Re-openable
- Double strain relief for strong and secure cable clamping

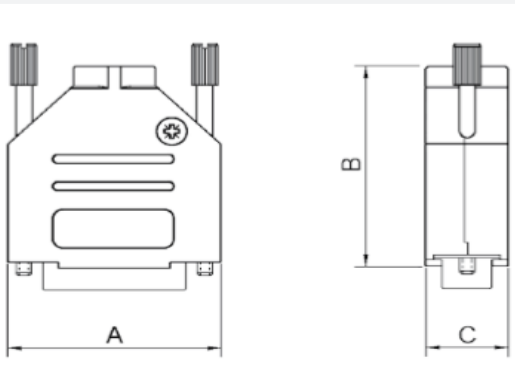

Disclaimer
Please note that the above information is subject to change without notice.



Size	Dim A	Dim B	Dim C
9-way	34.0	45.0	14.6
15-way	43.0	45.0	14.6
25-way	53.5	45.0	14.6
37-way	71.0	45.0	14.6
50-way	71.0	45.0	17.4

ORDERING INFORMATION

Description	Size	Part Numbers
DSUB METAL HOOD 09	9-way	8655BMET1A10KLF
DSUB METAL HOOD 15	15-way	8655BMAT1A10KLF
DSUB METAL HOOD 25	25-way	8655BMBT1A10KLF
DSUB METAL HOOD 37	37-way	8655BMCT1A10KLF
DSUB METAL HOOD 50	50-way	8655BMDT1A10KLF

14• STRAIGHT EXIT FULL METAL HOOD WITH RUBBER GROMMET, SHORT SCREWS

TECHNICAL INFORMATION

- Material: Zinc, Nickel Plated
- Operating Temperature Range: -40°C to +120°C
- Cable Entry: Top Entry
  Rubber Grommet RGS
- Strain relief: Clamp + Insert
- Thumbscrews: UNC 4-40 (Standard)
  M2.5 or M3 on request
- Cable O.D: Up to 11.5mm (Standard)



FEATURES

- 360° EMI Shielding
- Quick assembly
- Pre-mounted locking screws
- Supports all types of cables

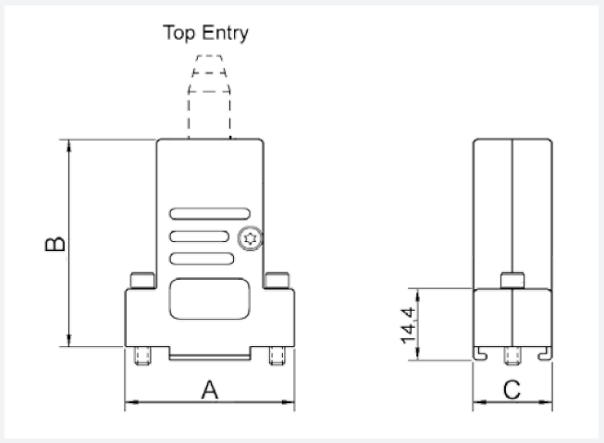

Disclaimer
Please note that the above information is subject to change without notice.



Size	Dim A	Dim B	Dim C
9-way	32.2	42.0	14.5
15-way	40.8	42.3	14.9
25-way	54.0	42.3	14.9
37-way	70.5	48.0	15.1



ORDERING INFORMATION

Description	Size	Part Numbers
METAL HOOD 09	9-way	8655DMET1B13KLF
METAL HOOD 15	15-way	8655DMAT1B13KLF
METAL HOOD 25	25-way	8655DMBT1B13KLF
METAL HOOD 37	37-way	8655DMCT1B13KLF

15• ANGLE EXIT FULL METAL HOOD WITH RUBBER GROMMET, SHORT SCREWS

TECHNICAL INFORMATION

- Material: Zinc, Nickel Plated
- Operating Temperature Range: -40°C to +120°C
- Cable Entry: 45° Side Entry
  Rubber Grommet RGS
- Strain relief: Clamp + Insert
- Thumbscrews: UNC 4-40 (Standard)
  M2.5 or M3 on request
- Cable O.D: Up to 11.5mm



FEATURES

- 360° EMI Shielding
- Quick assembly
- Pre-mounted locking screws
- Supports all types of cables

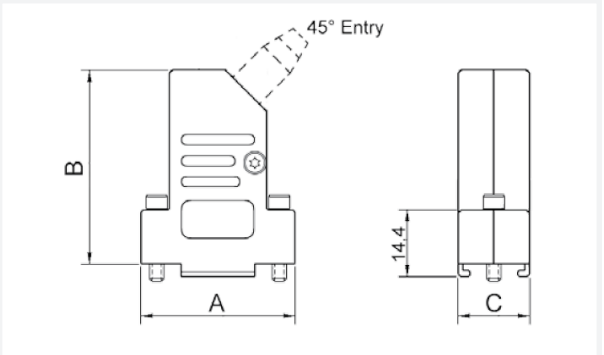

Disclaimer
Please note that the above information is subject to change without notice.



Size	Dim A	Dim B	Dim C
9-way	32.2	42.0	14.5
15-way	40.8	42.3	14.9
25-way	54.0	42.3	14.9
37-way	70.5	48.0	15.1

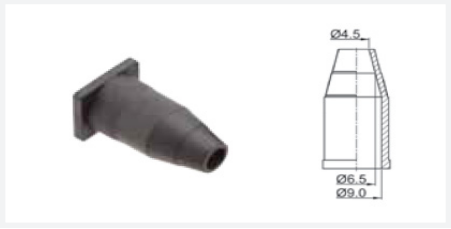

ORDERING INFORMATION

Description	Size	Part Numbers
METAL HOOD 09	9-way	8655DMES2B13KLF
METAL HOOD 15	15-way	8655DMAS2B13KLF
METAL HOOD 25	25-way	8655DMBS2B13KLF
METAL HOOD 37	37-way	8655DMCS2B13KLF

16• RIGHT ANGLE EXIT FULL METAL HOOD

TECHNICAL INFORMATION

- Material: Zinc, Nickel Plated
- Operating Temperature Range: -40°C to +120°C
- Cable Entry: 90° Side Entry
- Jackscrews: UNC 4-40, M3 on request
- Cable O.D: Up to 11.7mm
- Type of grommets: 2 piece Plastic Ferrule Kit



FEATURES

- Available in sizes 9-15-25-37-way
- Suitable for any common Sub-D connector
- Re-Openable



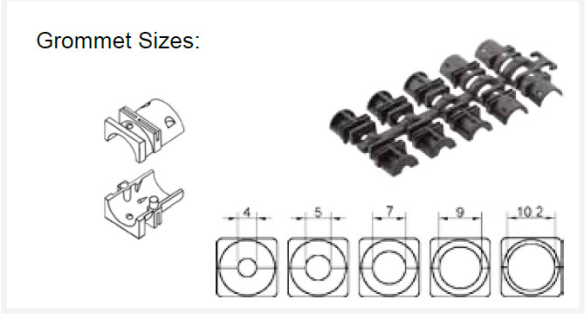

Disclaimer
Please note that the above information is subject to change without notice.

D-Sub Accessories

Size	A	B	C	D	E	F	G
9	15.0	31.0	15.0	24.0	51.0	18.0	26.5
15	15.3	39.2	15.0	24.0	59.0	18.0	26.5
25	16.0	54.0	23.0	34.5	73.0	24.5	37.0
37	16.0	70.5	23.0	34.5	89.5	24.5	37.0

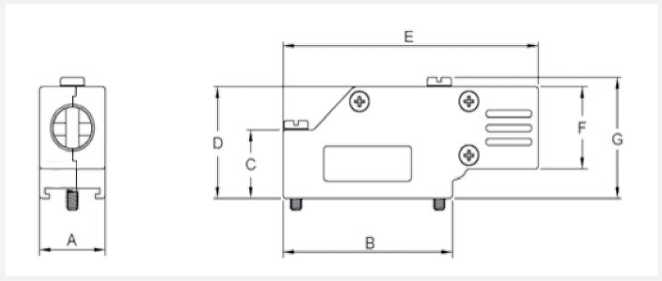

ORDERING INFORMATION

Description	Size	Part Numbers
DSUB METAL HOOD 09	9-way	8655GMES3C11KLF
DSUB METAL HOOD 15	15-way	8655GMAS3C11KLF
DSUB METAL HOOD 25	25-way	8655GMBS3C11KLF
DSUB METAL HOOD 37	37-way	8655GMCS3C11KLF

17• TWO SIDE EXIT FULL METAL HOOD

TECHNICAL INFORMATION

- Material: Zinc, Nickel Plated
- Operating Temperature Range: -40°C to +120°C
- Cable Entry: Side + Side Entry
- Thumbscrews: UNC 4-40 (Standard)
  M2.5 or M3 on request
- Cable O.D: Up to 11.5mm



FEATURES

- Available in size 9
- Excellent EMI Shielding
- Re-openable

ACCESSORIES

Universal Rubber Grommet

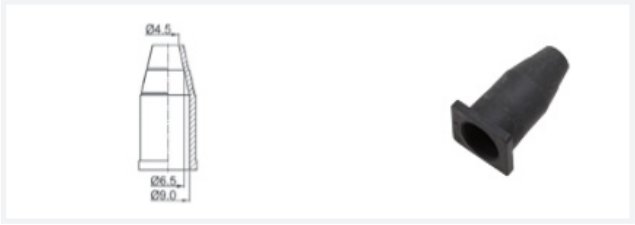

Metalized Plastic Grommet Kit

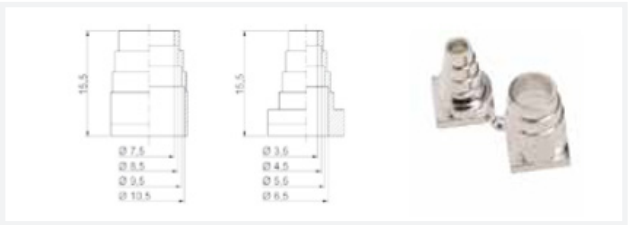

Disclaimer
Please note that the above information is subject to change without notice.

D-Sub Accessories

Size	Dim A	Dim B	Dim C
9-way	15	32.2	45
15-way	15	40.8	45
25-way	15	54.0	45

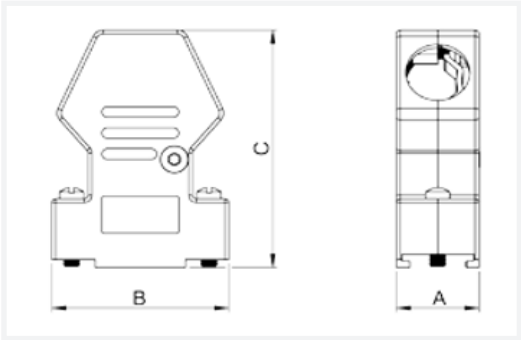

ORDERING INFORMATION

Description	Size	Part Numbers
DSUB METAL HOOD 09	9-way	8655HMED1A10KLF
DSUB METAL HOOD 15	15-way	8655HMAD1A10KLF
DSUB METAL HOOD 25	25-way	8655HMBD1A10KLF

18• METAL HOOD WITH CIRCULAR CLAMP AND STRAIGHT EXIT

TECHNICAL INFORMATION

- Material: Steel
- Plating: Yellow chromate cadmium
- Corrosion Resistance
- 50 hours exposure to salt spray



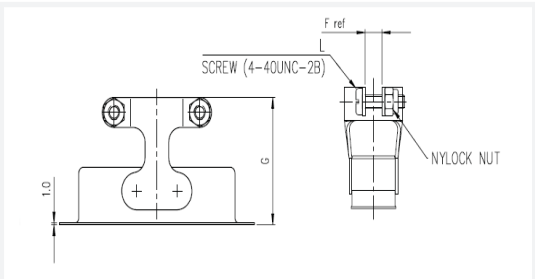

Shell Size	Part Numbers	A ± 0.38	B ± 0.38	C ± 0.13	D ref	E ± 0.38	F ref	G ± 0.76	H ± 0.38	L ± 0.80
E	863010A	30.68	12.70	25.00	10.31	16.79	3.18	26.19	8.74	9.53
A	863011A	38.89	12.70	33.30	10.31	25.00	3.18	26.19	8.74	9.53
B	863012A	52.78	12.70	47.04	15.06	38.48	4.75	27.08	8.74	9.53
C	863013A	69.04	12.70	63.50	18.25	55.14	6.35	27.08	8.74	12.70
D	863014A	66.68	15.47	61.12	20.62	53.16	7.93	27.08	11.13	15.88

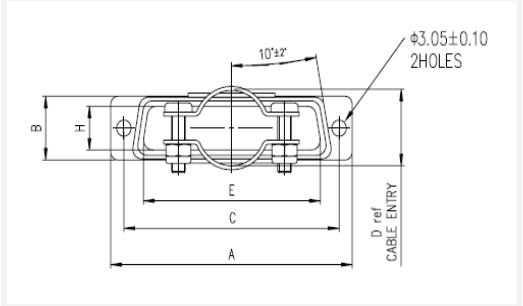

Disclaimer
Please note that the above information is subject to change without notice.

METALIZED HOODS

19• STRAIGHT EXIT METALIZED HOOD WITH SHORT SCREWS

TECHNICAL INFORMATION



- Material: UL recognised Plastic Material
- Plating: Nickel over Copper
- Operating Temperature: -40°C to +120°C
- Cable Entry: Top
- Thumbscrews: UNC 4-40 (Short)
- Cable O.D: 9-way Up to 7.0mm
  15-way Up to 10.0mm
  25-way Up to 11.0mm
  37-way Up to 13.8mm
  50-way Up to 14.0mm

FEATURES

- Available in sizes 9-15-25-37-50
- Re-openable
- Short Jackscrews



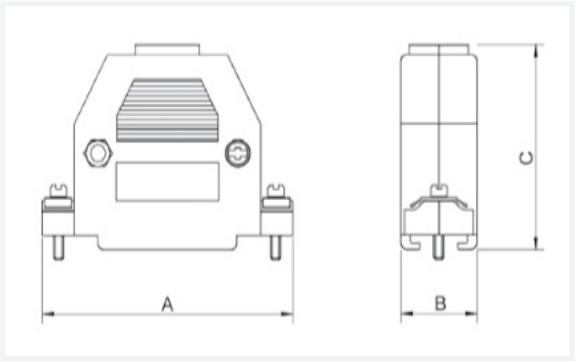

Size	Dim A	Dim B	Dim C
9-way	31.0	16.0	40.4
15-way	39.7	17.5	36.7
25-way	54.6	16.8	44.5
37-way	69.0	23.9	53.0
50-way	69.5	19.8	44.7

ORDERING INFORMATION

Description	Size	Part Numbers
METALIZED HOOD 09	9-way	8655BZET1B10KLF
METALIZED HOOD 15	15-way	8655BZAT1B10KLF
METALIZED HOOD 25	25-way	8655BZBT1B10KLF
METALIZED HOOD 37	37-way	8655BZCT1B10KLF
METALIZED HOOD 50	50-way	8655BZDT1B10KLF

Disclaimer
Please note that the above information is subject to change without notice.

20• STRAIGHT EXIT METALIZED HOOD WITH LONG JACK SCREWS

TECHNICAL INFORMATION

- Material: UL 94 V-0 Plastic Material
- Plating: Nickel over Copper
- Operating Temperature: -55°C to +110°C
- Cable Entry: Top
- Jack Screws: UNC 4-40 (Standard)
  M2.5 or M3 on request
- Cable O.D: Up to 11.7mm



FEATURES

- Available in sizes 9-15-25-37
- Strain relief inserts ensure a secure termination
- Re-openable

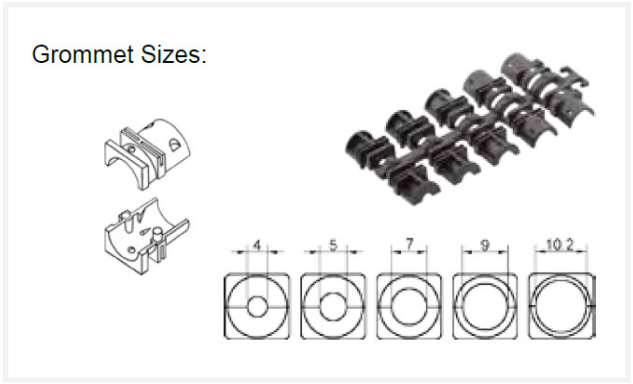

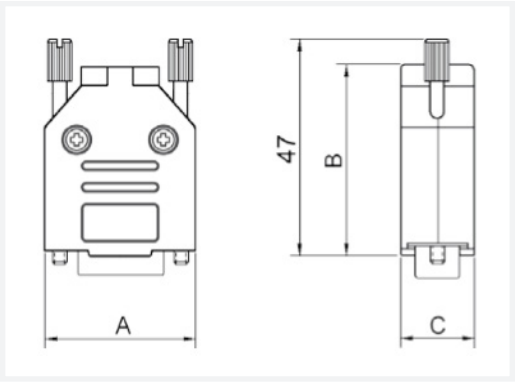

Size	Dim A	Dim B	Dim C
9-way	31.2	39.9	15.0
15-way	39.5	41.5	15.0
25-way	53.4	48.6	15.0
37-way	69.7	53.6	15.0

ORDERING INFORMATION

Description	Size	Part Numbers
METALIZED HOOD 09	9-way	8655AZET1A11KLF
METALIZED HOOD 15	15-way	8655AZAT1A11KLF
METALIZED HOOD 25	25-way	8655AZBT1A11KLF
METALIZED HOOD 37	37-way	8655AZCT1A11KLF

Disclaimer
Please note that the above information is subject to change without notice.

21• ANGLE EXIT METALIZED HOOD WITH LONG JACK SCREWS

TECHNICAL INFORMATION

- Material: UL 94 V-0 Plastic Material
- Plating: Nickel over Copper
- Operating Temperature: -55°C to +110°C
- Cable Entry: Side 45° entry
- Jack Screws: UNC 4-40 (Standard)
  M2.5 or M3 on request
- Cable O.D: Up to 11.7mm



FEATURES

- Available in sizes 9-15-25-37
- Strain relief inserts ensure a secure termination
- Re-openable

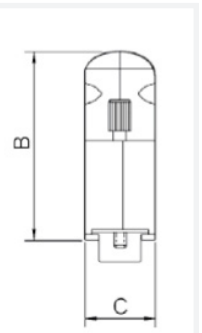

Size	Dim A	Dim B	Dim C
9-way	31.0	36.3	15.0
15-way	39.5	40.3	15.0
25-way	53.2	40.3	15.0
37-way	69.7	40.3	15.0

Grommet Sizes:

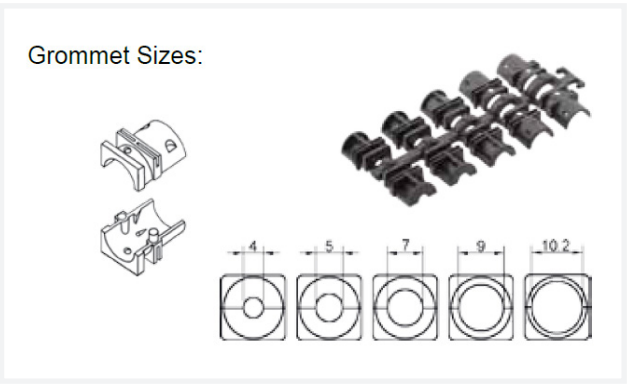

ORDERING INFORMATION

Description	Size	Part Numbers
METALIZED HOOD 09	9-way	8655AZES2A11KLF
METALIZED HOOD 15	15-way	8655AZAS2A11KLF
METALIZED HOOD 25	25-way	8655AZBS2A11KLF
METALIZED HOOD 37	37-way	8655AZCS2A11KLF

Disclaimer
Please note that the above information is subject to change without notice.

LOCKING DEVICES & OTHER ACCESSORIES

22• FEMALE SCREW LOCKS

Thread	L.Max	F	Material	Part Numbers
M3	8.30	6.90	Brass	863001TLF
M3	8.30	6.90	Steel	86552153TLF
M3	6.30	5.00	Brass	863001017TLF
M3	13.00	12.00	Brass	863001061TLF
UNC 4-40	8.30	6.90	Brass	863001060TLF

- Plating: Bright tin
- Corrosion Resistance: 24 hours exposure to salt spray

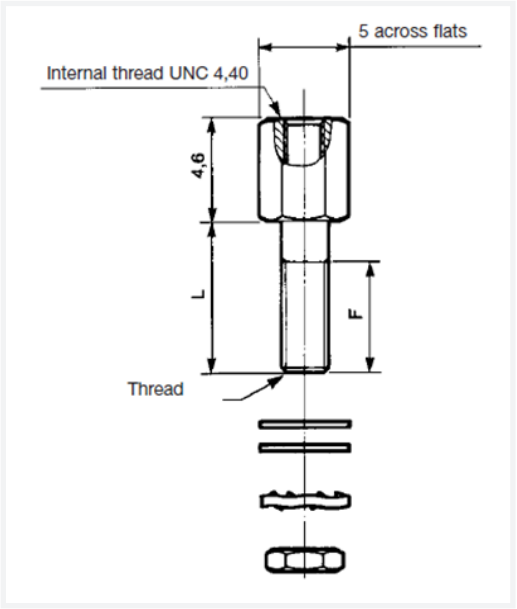

23• SPECIFIC FEMALE SCREW LOCKS FOR DELTA D SERIES

Thread	L.Max	F	Material	Part Numbers
M3	4.5	3.7	Steel	863001018TLF
UNC 4-40	4.5	3.7	Steel	863001019TLF

Material	Torque Max. (Nm)
Brass	0.5
Steel	0.7

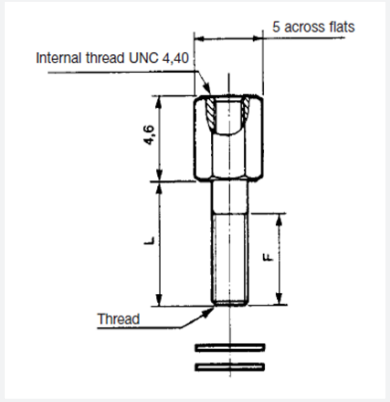

24• MALE SCREW LOCKS

Shell Size	Connector Type	Part Numbers		
		For use with connector without hood or with hood 2	For use with connector with hoods 18	For use with connector with hoods 6
E	Male	863005ATLF	863004ATLF	863009ATLF
	Female			
A	Male			
	Female			
B	Male			
	Female			
C	Male	863008ATLF		
	Female	863005ATLF		
D	Male	863015ATLF	863002ATLF	863025ATLF
	Female	863003ATLF		

Disclaimer
Please note that the above information is subject to change without notice.

TECHNICAL INFORMATION

- Material: Steel
- Plating: Bright tin
- Corrosion Resistance: 50 hours exposure to salt spray
- To obtain military plating (yellow chromate cadmium) exclude «TLF» in the part number (ex: 863005A)
- Thread: UNC 4-40



25• LEVER LOCKS

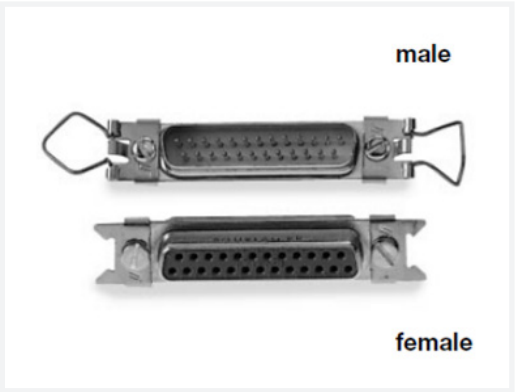



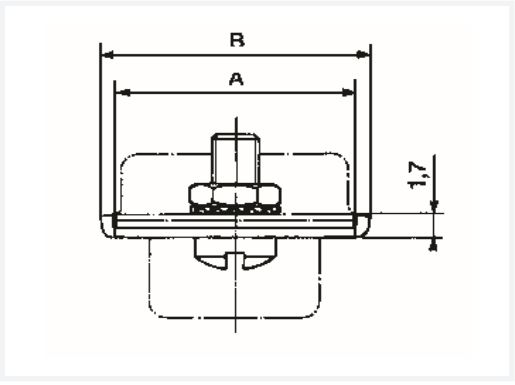

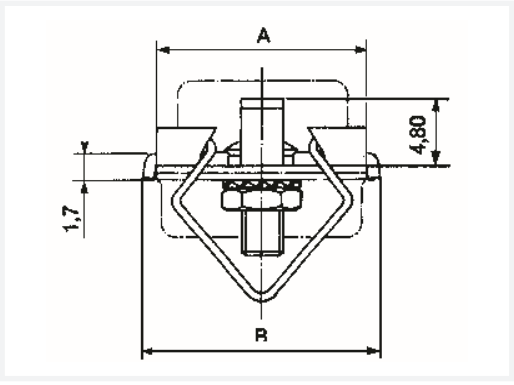

- Material: Steel
- Plating: Passivated

Shell Size	Material	Plating	A	B	M3 Thread		UNC 4-40 Thread	
					Female	Male	Female	Male
E, A, B, C	Steel	Passivated	12.50	14.30	86303425LF	86552096LF	86303425060LF	86552098LF

Disclaimer
Please note that the above information is subject to change without notice.

26• METAL DUST CAPS

Shell size	Connector Type Compatibility	Part Numbers	Diameter
E	Male	86553148TLF	30
	Female	86553113TLF	30
		86553138TLF*	30
A	Male	86553149TLF	25
	Female	86553114TLF	25
		86553139TLF*	25
B	Male	86553150TLF	20
	Female	86553115TLF	20
		86553140TLF*	20
C	Male	86553151TLF	15
	Female	86553116TLF	15
		86553141TLF*	15
D	Male	86553152TLF	10
	Female	86553117TLF	10
		86553142TLF*	10

* Sealed caps IP 65



- Material: Steel
- Plating: Bright tin

27• PLASTIC DUST CAPS



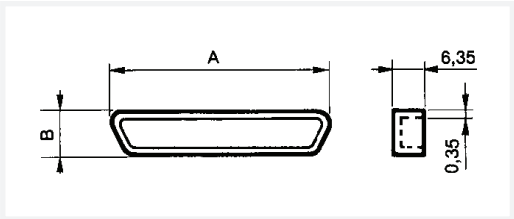

Shell size	For Male Connector	A	B	For Female Connector	A	B
E	70518BLF	19.17	10.30	70523BLF	17.77	9.0
A	70519BLF	27.50	10.30	70524BLF	26.10	9.0
B	70520BLF	41.67	10.70	70525BLF	39.82	9.0
C	70521BLF	58.13	10.70	70526BLF	56.28	9.0
D	70522BLF	55.49	13.40	70527BLF	53.89	11.85

- Material: Thermoplastic
- Color: Black
- For Red colour, to change the “B” to “C” in P/N logic, Eg: 70518CLF

Disclaimer
Please note that the above information is subject to change without notice.

28• ATTACHING CORD FOR METAL CAPS

86553156LF (Length = 100 mm) Packaging: Individual



INODSUBACC0921EA4

Disclaimer
Please note that the above information is subject to change without notice.

MDBR Series Rugged D–Subminiature Connectors

RUGGED D–SUB CONNECTORS FOR HARSH ENVIRONMENT APPLICATION, GENERATION 2

Amphenol's MDBR series D–Sub Connectors serve many markets and applications across the globe including Automotive, Communications, Industrial, Medical and Military.

MDBR series is a line of Generation 2 ruggedized D–Sub connectors with die cast housings and IP67 sealing, designed for Harsh Environment applications. MDBR provides a standard D–Sub interface. Protection is provided for the ingress of water when immersed to a 1.0m depth for a period of 30 minutes and the ingress of dust less than 75 microns under 2 kPa vacuum pressure.

- IP67 environmental sealing protects against water and dust
- Die cast metal housings protect against mechanical damage
- Operating temperature range from –40°C to +105°C for extreme conditions
- RoHS compliant to meet environmental standards



TARGET MARKETS



FEATURES	BENEFITS
▪ Internal and external seals made with flexible silicone rubber	▪ Excellent sealing to IP67 and higher protection over wide temperature range ▪ Protects equipment from water and dust incursion
▪ Die cast metal housings	▪ Mechanically rugged and stable to protect against shock, vibration and impact ▪ Prevents distortion
▪ Improved thermal cycling performance	▪ Suitable for outdoor application with wide operating temperature range
▪ Mates with existing standard connectors	▪ Suitable for a wide variety of mating connectors which are readily available
▪ Similar in size compared to standard equivalents	▪ Able to replace existing standard parts with little to no changes
▪ Machined contacts plated with 30u" gold	▪ Extremely durable for demanding applications
▪ Wide variety of mounting and termination options	▪ Replace virtually any existing standard connector using standard footprints and mounting hardware
▪ RoHS compliant	▪ Meets environmental, health and safety requirements

TECHNICAL INFORMATION

MATERIAL

- External Shell: Die Cast Zinc, Nickel Plated
- Insulator Housing: High Temperature Resistant Nylon, Glass Reinforced, UL940V-0, Black
- Contacts: Machined Phosphor Bronze or Brass Alloy Plated with 0.76um (30u") min Gold over 1.27um (50u") min Nickel
- Gaskets & O-rings: Silicone Rubber, Black or Red
- Jack Sockets: Stainless Steel
- Dust Covers: Silicone Rubber, Grey, with Nickel Plated Brass Bushing
- Threaded Inserts: Nickel Plated Steel

ELECTRICAL PERFORMANCE

- Current Rating: Standard Density – 5A max., High Density – 3A max.
- Contact Resistance: 20mΩ max.
- Insulation Resistance: 5000mΩ min.
- Dielectric Withstanding Voltage: Standard Density-1500V DC, High Density-1200V DC

MECHANICAL PERFORMANCE

- Water & Dust Protection Level: Code IP67 per IEC 60529
- Operating Temperature: -40°C to +105°C
- Contact Insertion Force: Standard Density – 5.0N (18ozf) max, 3.3N (12ozf) max Average Initial, High Density – 5.0N (18ozf) max, 2.6N (9.5ozf) max Average Initial
- Durability: Per EIA 364-09, 500 Mating Cycles
- Vibration: Per EIA 364-28 Condition V, Letter D, 4.5 Hrs, No Discontinuity > 1µs
- Shock: Per EIA 364-27 Test Condition A (11ms, 50g, 1/2 Sine), No Discontinuity > 1µs

SPECIFICATION

- Amphenol Product Specification: MIL-DTL-24308

APPROVALS AND CERTIFICATIONS

- RoHS

ENVIRONMENTAL

- Temperature Life w/o Load: Per EIA-364-17, 105°C, 1000 Hours
- Thermal Shock: Per EIA-364-32, -55°C to +105°C, 25 Cycles
- Humidity: Per EIA-364-31, 10 Cycles, 240 Hrs, 25°C to 65°C, 90-95%RH, with -10°C Cold Shock
- Thermal Cycling: Per EIA-364-110, 500 Cycles, 15°C to 85°C
- Mixed Flowing Gas: Per EIA 364-65 Class IIA (Cl2, No2, H2S & SO2), 14 Day Exposure
- Isopropyl Alcohol & 5% Sodium Hydroxide Solution, 24 Hrs Each
- Solderability: Per EIA-364-52, 95% Coverage after Category 2 Steam Aging

PACKAGING

- Tray

TARGET MARKETS/APPLICATIONS


Transportation


Datacom
Telecom


Energy
Industrial
Rail


Medical


Military

Disclaimer
Please note that the above information is subject to change without notice.

PART NUMBER SELECTOR

MDBR	—	XXX	X	X	XX	—	X

Shell Size & Number of Contacts	
E09	E Size Shell, 9 Contacts, Size 20, Standard Density
E15	E Size Shell, 15 Contacts, Size 22, High Density
A26	A Size Shell, 9 Contacts, Size 22, Standard Density

Gender Type	
P	Pin
S	Socket

Termination Style	
E	Vertical PCB Tail
M	Solder Cup Tail

Mounting Hole Thread Options	
AN	#4–40 UNC Unified Thread
JN	M3 x 0.5 Metric Thread

Options and Unique Special Code	
0	Standard Part
1–9	Identifies Unique Special Features

CMIOMDBRGEN21120EA4

Disclaimer
Please note that the above information is subject to change without notice.

Amphenol

www.amphenol-icc.com