M Series

Microminiatures — 0.050" (1.27mm)

AirBorn

High-Reliability Interconnect Solutions

AirBorn

Contents

"M" Series

.050" Microminiature PCB and I/O Connectors

M-1	Index
M-5	Contents
M-6	Specifications
M-7	Performance
M-8	Part number description
M-9	Mating matrix

Micro-Strip Connectors (Plastic)

M-11	MA-1	1-row, cable to cable
M-13	MA-1	1-row, board to cable
M-15	MA-1	1-row, MA strip guidelines
M-16	MA-1	1-row, board layouts
M-23	MA-2	2-row, cable to cable
M-25	MA-2	2-row, board to cable
M-28	MA-2	2-row, MA strip guidelines
M-29	MA-2	2-row, board layouts

Micro-D Cable to Cable Connectors (Metal and Plastic)

M-35	MM-MM, MN-MN	Rugged
M-36.1	MM	Rugged, Grounding Fingers
M-36.3	MM	Rugged, Integrated Shield Termination - Stranded Wire
M-36.5	MM	Rugged, Integrated Shield Termination - Stranded Wire
M-37	MM, MN	Rugged, Jumper Assembly
M-39	MQ-MQ, MP-MP	Low Profile
M-41	MQ, MP	Low Profile, Jumper Assembly
M-43	MK, ML	Rugged Right Angle, Narrow Footprint
M-45	MK	Rugged Right Angle, Thru Clearance
M-47	MK	Rugged Right Angle, Blind Clearance
M-49	MK, ML	Rugged, Flex Cable
M-51	MS, MR	Low Profile Right Angle, Narrow Footprint
M-53	MS	Low Profile Right Angle, Blind Clearance
M-55	MS, MR	Low Profile, Flex Cable
M-57	MK, ML, MS, MR	Board Layouts - Right Angle Narrow Footprint
M-60.1	MK	Rugged Right Angle, Compressed Footprint
M-60.3	MK	Board Layouts - Right Angle Compressed Footprint
M-61, M-63	MK-MM, ML-MN	Rugged Right Angle, Standard Footprint
M-65	MK, ML	Board Layouts - Right Angle Standard Footprint
M-67, M-69	MK-MM, ML-MN	Rugged Straight, Narrow Footprint
M-71	MK, ML	Board Layouts - Straight Narrow Footprint
M-73, M-75	MK-MM, ML-MN	Rugged Straight, Standard Footprint
M-77	MK, ML	Board Layouts - Straight Standard Footprint

Micro-D Surface Mount Board to Cable Connectors

M-81	MM, MN	Specifications, SMT Connectors
M-82	MM, MN	Performance, SMT Connectors
M-83, 85	MM-MM, MN-MN	Rugged Horizontal SMT
M-87	MM, MN	Board layouts - Rugged Horizontal SMT
M-89, 91	MK-MM	Rugged Vertical SMT
M-93	MK	Board layouts - Rugged Vertical SMT
M-95, 97	MK-MM	Rugged Card Edge Mount
M-99	MK	Board layouts - Rugged Card Edge Mount

Micro-D Filtered Cable Connectors

M-103	MF	Rugged metal

Micro-D Hybrid Connectors

M-105	MM	Specifications, Rugged Hybrid Connectors
M-106	MM	Performance, Rugged Hybrid Connectors
M-107	MM	Rugged Hybrid

Micro-Circular Connectors

M-109	MC-MC	Rugged metal, quick release

Micro-D Rear Panel Mount Connectors

M-111	MK-MM, MK-MN	Specifications, Rear Panel Mount
M-112	MK-MM, MK-MN	Performance, Rear Panel Mount
M-113, 115	MM, MN	Rugged, Cable to Cable Rear Panel Mount
M-117, 119	MK-MM, MK-MN	Rugged, Board to Cable Rear Panel Mount
M-121	MK	Board Layouts - Straight, Standard Footprint
M-122.1	MK	Rugged Right Angle, Rear Panel Mount
M-122.3	MK	Board Layouts - Rugged Right Angle

Micro-D Sealed Connectors

M-123	MM	Specifications, Sealed
M-124	MM	Performance, Sealed
M-125	MM	Rugged, Metal I/O Sealed

"M" SERIES - .050"

MIL-DTL-83513

See pages M-5 thru M-126

"MHT" SERIES - .050"

High Temperature

See pages MHT-1 thru MHT-24

"M" SERIES ACCESSORIES

See pages MA-1 thru MA-25

MILITARY CROSS REFERENCE

See pages MIL-1 thru MIL-22

AirBorn

Micro-Strip Connectors Cable to Cable

1 Row
Sizes: 3 thru 60
Page: M-11

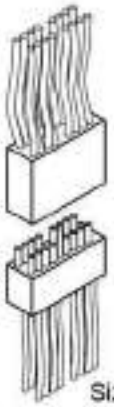

2 Row
Sizes: 4 thru 128
Page: M-23

Micro-Strip Connectors Board to Cable

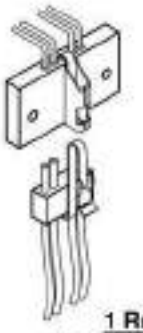

1 Row
Sizes: 3 thru 60
Page: M-13

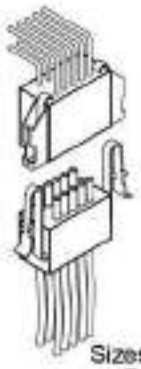

2 Row
Sizes: 4 thru 128
Page: M-25

Micro-D Connectors Cable to Cable

Single Row Micro
Sizes: 4 thru 25
Page: M-127

Rugged
Sizes: 9 thru 100
Page: M-35
High Temperature Sizes: 9 thru 100
Page: MHT-7

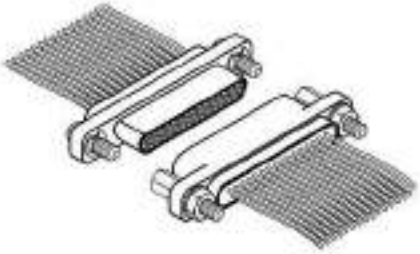

Low Profile
Sizes: 9 thru 51
Page: M-39
High Temperature Sizes: 9 thru 51
Page: MHT-9

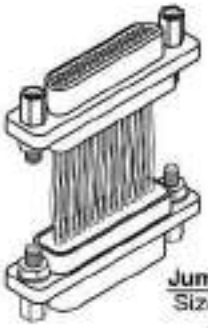

Rugged, Jumper Assembly
Sizes: 9 thru 100
Page: M-37

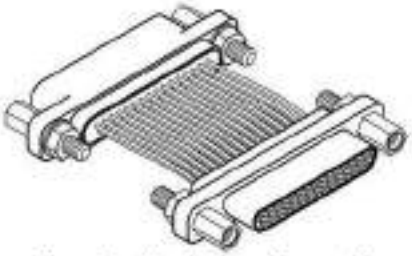

Low Profile, Jumper Assembly
Sizes: 9 thru 51
Page: M-41

AirBorn

Micro-D Connectors Board to Cable

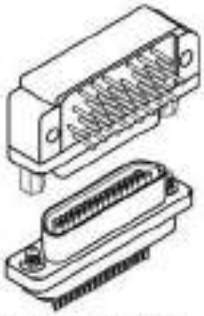

Rugged Right Angle, Narrow Footprint
Sizes: 9 thru 100
Pages: M-43 & M-48
High Temperature Sizes: 9 thru 100
Pages: MHT-11 & MHT-13

Low Profile Right Angle, Narrow Footprint
Sizes: 9 thru 51
Pages: M-51 & M-54
High Temperature Sizes: 9 thru 51
Pages: MHT-17 & MHT-19

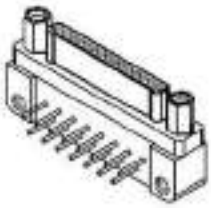

Single Row Micro
Sizes: 4 thru 25
Page: M-129

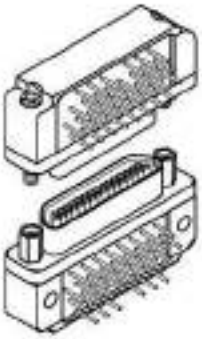

Rugged, Flex Cable
Sizes: 9 thru 100
Page: M-49

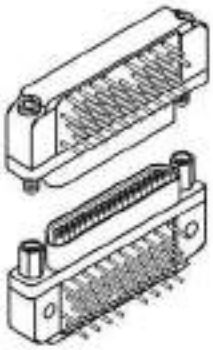

Low Profile, Flex Cable
Sizes: 9 thru 51
Page: M-55

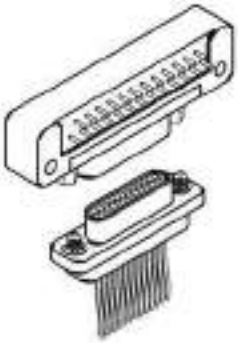

Rugged Right Angle, Standard Footprint
Sizes: 9 thru 100
Pages: M-61 & M-63

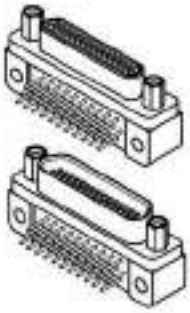

Rear Panel Mount Compressed Footprint
Sizes: 9 thru 100
Pages: M-60.1 & M-60.4

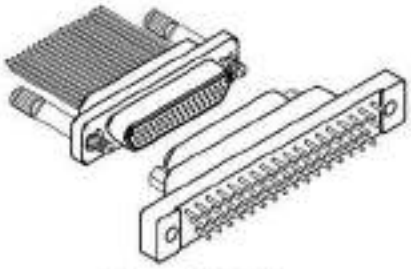

Rugged Straight, Narrow Footprint
Sizes: 9 thru 100
Pages: M-67 & M-69

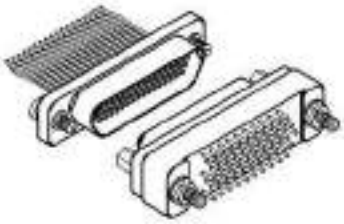

Rugged Straight, Standard Footprint
Sizes: 9 thru 100
Pages: M-73 & M-75

Low Profile, Radius Shell
High Temperature Sizes: 9 thru 51
Page: MHT-23

AirBorn

Micro-D Connectors Surface Mount Board to Cable

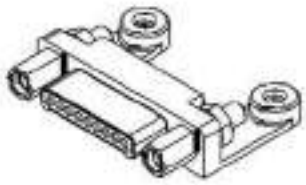

Sing Row Micro
Sizes 4 thru 25
Pages: M-133

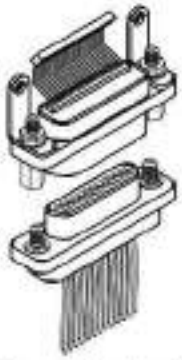

Rugged Horizontal, Surface Mount
Sizes: 9 thru 51
Pages: M-83 & M-85

Rugged Vertical, Surface Mount
Sizes: 9 thru 51
Pages: M-89 & M-91

Rugged Card Edge Mount
Sizes: 9 thru 100
Pages: M-95 & M-97

Micro-D Connectors Filtered Cable

Rugged Filtered
Sizes: 9 thru 37
Page: M-103

Micro-D Connectors Hybrid Cable

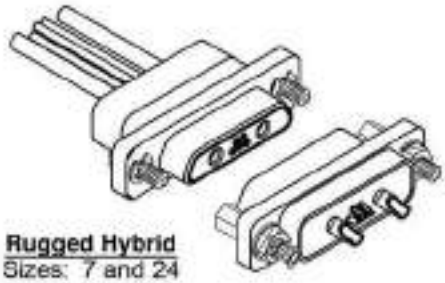

Rugged Hybrid
Sizes: 7 and 24
Page: M-107

Circular Cable Connectors

Circular
Sizes: 7 & 19
Page: M-109

Micro-D Connectors Rear Panel Mount

Rugged, Cable to Cable
Sizes: 9 thru 100
Pages: M-113 & M-115

Rugged, Board to Cable
Sizes: 9 thru 100
Pages: M-117 & M-119

Right Angle Boardmount

Rear Panel Mount
Sizes: 9 thru 100
Page: M-122.1 & M-122.4

Micro-D Connectors Sealing

Rugged, I/O
Sizes: 9 thru 100
Page: M-125

Micro-D Connectors Grounding Fingers

Rugged, I/O
Sizes: 9 thru 100
Page: M-36.1

AirBorn

Micro-D Connectors Connector Savers

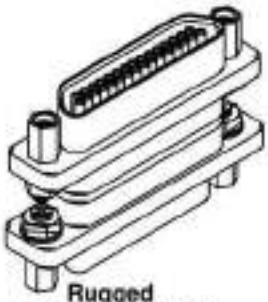

Rugged
Sizes: 9 thru 100
Page: MA-11

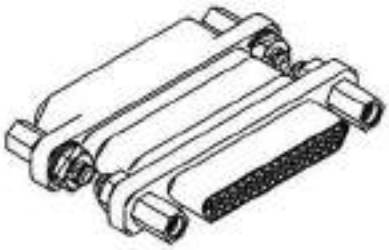

Low Profile
Sizes: 9 thru 51
Page: MA-13

EMI / RFI Straight Backshells

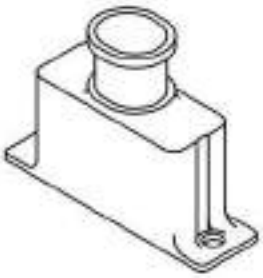

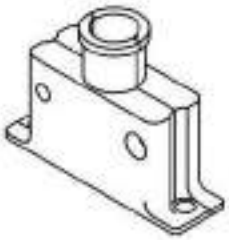

Rugged
Page MA-15

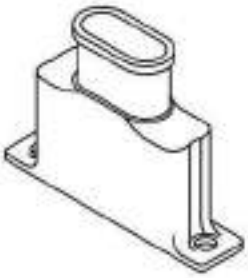

Low Profile
Page MA-21

Micro-D EMI / RFI 45° Backshells

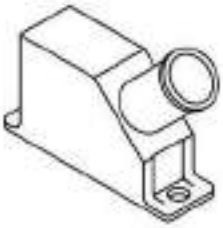

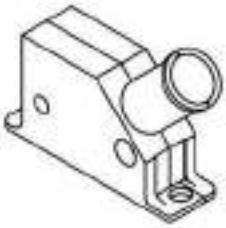

Rugged
Page MA-17

Micro-D EMI / RFI 90° Backshells

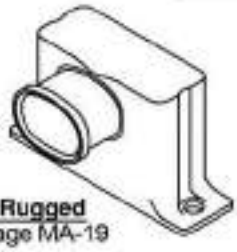

Rugged
Page MA-19

Integral Shield Termination

Rugged
Page M-36.3

Integral Shield Termination with Solder Cups

Rugged
Page M-36.5

Dust Covers

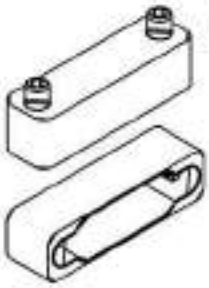

Rugged
Page MA-23

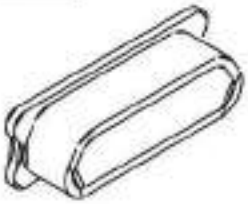

ESD
Rugged & Low Profile
Page MA-25

"M" SERIES - .050"
MIL-DTL-83513

Specifications
Materials and Finishes *

Contacts:	Pins: BeCu alloy strip per ASTM B194 Sockets: Brass per ASTM B121 / B121M or ASTM B16 / B16M or ASTM B453
Contact Finish:**	Gold plate per ASTM B488
Shells:	Aluminum Alloy 6061-T6 per SAE AMS-QQ-A-250/11 or 6061-T6511 per SAE AMS-QQ-A-200/8 or Stainless Steel 300 series per ASTM A484 / A484M and ASTM A582 / A582M Passivated per SAE AMS2700
Aluminum Shell Finishes:**	Electroless Nickel per SAE AMS2404, Class 3, 500 µ" min Electrodeposited Cadmium per SAE AMS-QQ-P-416, Type II, Class 3 Black Anodized per MIL-A-8625, Type III, Class 2 Gold per MIL-DTL-45204, Type II, Grade C, Class 0 Zinc Nickel Alloy per ASTM B841, over a suitable underplate Pure Electrodeposited Aluminum per MIL-DTL-83488, type 2 High Phosphorus Nickel with Fluorocarbon Polymer additive per SAE AMS2454, Grade 2E, Type V (9% MIN Phosphorus content by weight)
Molded Insulators:	Glass filled polyphenylene sulfide per MIL-M-24519 Glass filled Liquid Crystal Polymer per ASTM D5138 (One row only)
Embedment:	Frey Engineering Co. insulating compound CF3003-80 and L-II-49 or equivalent
Jackscrews, Jackposts and Nuts:	Corrosion resistant steel per ASTM A320 or ASTM A484 / A484M and ASTM A582 / A582M Passivated per SAE AMS2700
Clips and Washers:	Corrosion resistant steel per ASME 18.24 or NASM35333 or ASTM A484/A484M and ASTM A582/A582M (For reference only: ASME 18.24 CRS per ASTM A693 and NASM35333 CRS per ASTM A240) Passivated per ASME 18.24 or NASM35333 or SAE AMS2700 (For reference only: ASME 18.24 and NASM35333 passivated per SAE AMS2700)
Guide Pins	Corrosion resistant steel per ASTM A484 / A484M and ASTM A582 / A582M Passivated per SAE AMS2700
Latches	Beryllium copper in accordance with ASTM B194 Electroless Nickel plate per SAE AMS2404
Interfacial Seal Gaskets:	Fluorosilicone per MIL-DTL-25988
Tolerances:**	Unless otherwise specified: Fractions = ±1/64" Decimals = ±.010" Angles = ±5° Wire lengths: insulated/stranded = +1.0"/-0.0" uninsulated/solid = +0.2"/-0.0"

Note: AirBorn can manufacture special configurations for your exact specifications.

* = Reference the above listed specifications or an equivalent industry standard when applicable

** = When ordering to Mil Spec P/N, Mil Spec requirements apply

AirBorn

Performance
Reference MIL-DTL-83513

AirBorn "M" Series meets or exceeds MIL-DTL-83513 Performance Specifications

Contact Rating:	3-amperes maximum
Solderability:	Terminals (except crimp) tested in accordance with MIL-STD-202, Method 208
Wire Size:	Stranded #26 AWG or solid #25 AWG standard (consult factory for other sizes and types)
Test Voltage:	600 V, RMS, 60 Hz
Operating Temperature:	-55° C to +125° C
Insulation Resistance:	5,000 megohms minimum @ 500 VDC
Durability:	500 connector mating cycles
Vibration:	Tested in accordance with MIL-STD-1344, Method 2005, Condition IV, according to MIL-83513
Shock:	Tested in accordance with MIL-STD-1344, Method 2004, Condition E, according to MIL-83513
Salt Spray:	Mated connectors tested in accordance with MIL-STD-1344, Method 1001, Test Condition B
Humidity:	Mated connectors tested in accordance with MIL-STD-1344, Method 1002, Type II (except steps 7a and 7b)
Thermal Shock:	Tested to the temperature extremes of MIL-STD-1344, Method 1003, Test Condition A (except step 3, temperature shall be 125° C)
Contact Resistance:	0.065 volt maximum drop @ 2.5 amps (.026 ohms)
Contact Engaging Force:	6.0 ounce maximum, with .0221 diameter test sleeve per contact
Contact Separating Force:	0.5 ounce minimum, with .0230 diameter test sleeve per contact
Crimp Strength:	5 pound minimum tensile strength
Mating & Unmating Force:	10 ounces maximum per contact

Part Number Description

Each part number consists of at least five elements: series, body description, size (number of contacts), type of contacts, and type of hardware. A sixth element is added whenever special modifications or options are available.

Each catalog page shows the choices available for each of these elements. By selecting one option from each category on the page, you can build a set of connectors to meet your requirements.

Each element is identified by a combination of letters and/or numbers in fixed field lengths, and separated by a hyphen (-). Each space must be filled in to complete the number. When the size, for example, is less than 100, indicate as 009, 051, etc.

Series:
This will always be a two letter designator, and will identify the connector series. All .050" connectors begin with the letter "M". The second letter designates the various styles of .050" connectors.

Body:
Each digit of the Body Designator will normally identify (1) the number of rows, (2) the style of body, and (3) the body materials. The three digit number to identify the body consists of one digit from each group.

Size:
The size is determined by the number of contacts in the connector, and is an integral part of the part number. Order only sizes shown on the catalog page unless otherwise noted.

Contacts:
Each page also identifies all contact options for a given connector. The first two digits designate the type of contacts and terminations; the third digit designates the plating option.

Hardware:
The hardware designator is four digits; two for style of hardware and two for polarization or wiring instruction. Follow the choices for each connector.

Special Instructions (Options):
Special instructions are referenced by a three or four digit number added to the end of the part number. The last three or four digits are included only when applicable. AirBorn will provide individual code numbers as needed.

Note:
Each page is as comprehensive as possible. However, if you do not find a particular connector size or option, please contact the factory for further assistance.

⊠ Symbolizes options that are not RoHS compliant.

AirBorn

Mating Matrix for AirBorn "M" Series Connectors

RECEPTACLES

PLUGS	MA (Strip)	MC (Circular)	MM (Hybrid)	MK (Metal) PC Board	ML (Plastic) PC Board	MM (Metal) I/O	MN (Plastic) I/O	MP (Plastic) I/O	MQ (Metal) I/O	MR (Plastic) PC Board	MS (Metal) PC Board
MA (Strip)	XX										
MC (Circular)		XX									
MM (Hybrid)			XX								
MK (Metal) PC Board				BB	BB	BI	BI				
ML (Plastic) PC Board				BB	BB	BI	BI				
MM (Metal) I/O				IB	IB	I I	I I				
MN (Plastic) I/O				IB	IB	I I	I I				
MP (Plastic) I/O								I I	I I	IB	IB
MQ (Metal) I/O								I I	I I	IB	IB
MR (Plastic) PC Board								BI	BI	BB	BB
MS (Metal) PC Board								BI	BI	BB	BB

I/O Connectors	MM-MN-MP-MQ
PC Board Mounted Connectors	MK-ML-MR-MS
Inter-mateable Connectors	MK-ML-MM-MN MP-MQ-MR-MS

KEY:

BB = PC Board Mounted Plug with PC Board Mounted Receptacle

BI = PC Board Mounted Plug with I/O Receptacle

IB = I/O Plug with PC Board Mounted Receptacle

I I = I/O Plug with I/O Receptacle

For Military Configurations, See pages MIL-1 thru MIL-22

AirBorn

1 • ROW
Strip Connectors Cable to Cable
.050"
MA-1
2 thru 60 Contacts

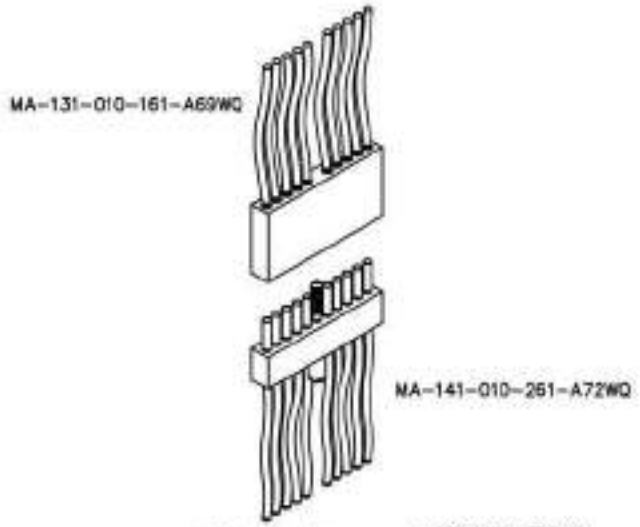

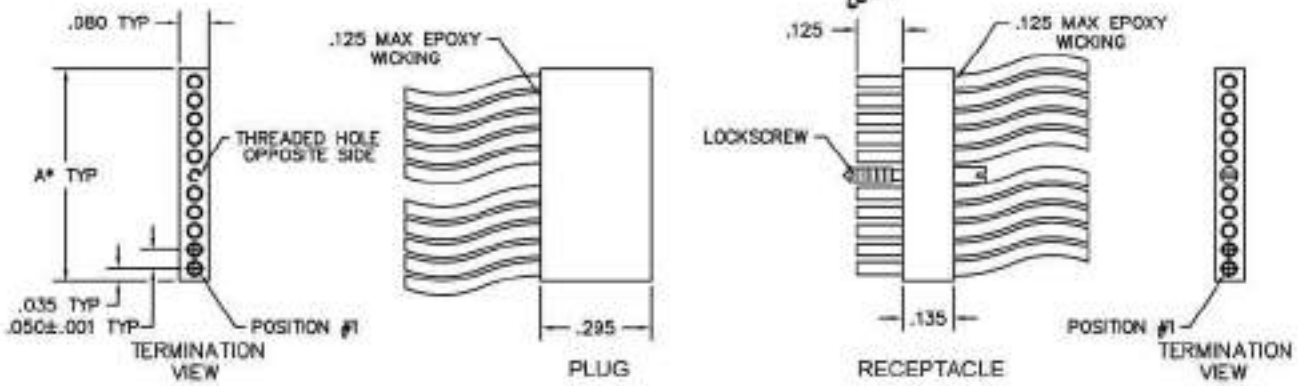

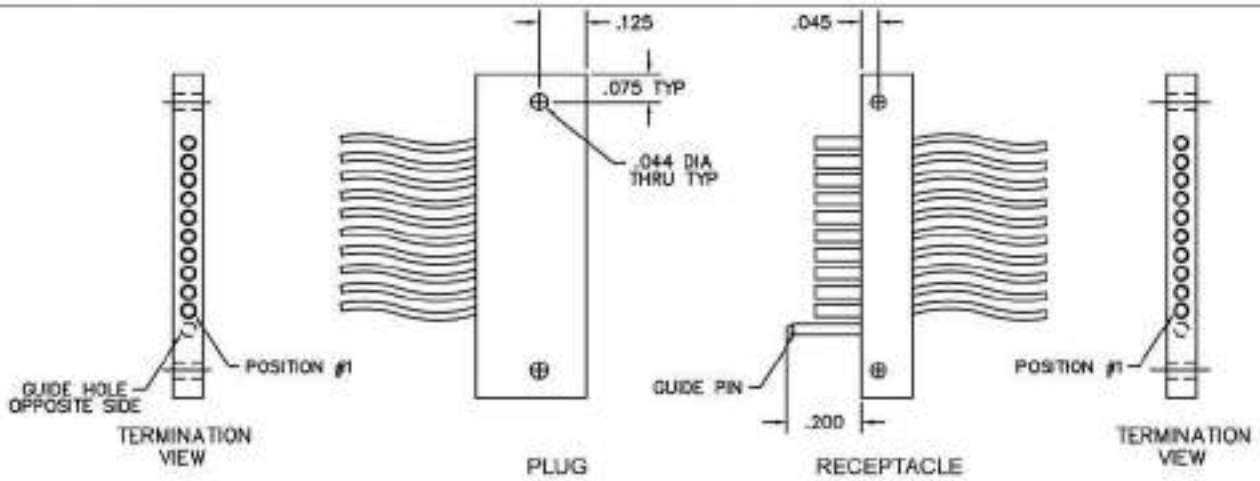

OPTIONAL MOUNTING HOLES & GUIDE PIN

DIMENSIONS

To determine connector length (Dim "A"):

Multiply the number of cavities in one row by .050"	. "
Add fixed end lengths (constant, .010" x 2)	0.02"
Add .150" for each mounting hole	. "
Total Length:	. "

Notes:
Length over 2" may require support to insure alignment.
When using one lockscrew, use centermost available hole.
* = Maximum length is 3.020". Maximum number of contacts must be reduced to accommodate hardware and mounting holes.

PLUG: MA–131–010–161–A69WQ
RECEPTACLE: MA–141–010–261–A72WQ
XX–XXX–XXX–XXX–XXXXX

PLUG	RECEPTACLE
SERIES	
MA .050" Microminiature Strip Connector	MA .050" Microminiature Strip Connector
BODY	
1 1-Row	1 1-Row
BODY STYLE: (Material: Polyphenylene sulfide)	BODY STYLE: (Material: Polyphenylene sulfide)
11 Plug, straight, with mounting holes	21 Receptacle, straight, with mounting holes
31 Plug, straight, without mounting holes	41 Receptacle, straight, without mounting holes
SIZE	
XXX 002 - 060	XXX 002 - 060
Note: Maximum number of contacts is reduced when using hardware or mounting holes. See dimension chart on M-11.	
CONTACTS	
TYPE CONTACTS/TERMINATIONS:	TYPE CONTACTS/TERMINATIONS:
11 Pin, straight, solder cup	21 Socket, straight, solder cup
14 Pin, straight, .500" pigtails (.018 dia)	24 Socket, straight, .500" pigtails (.018 dia)
15 Pin, straight, 1.000" pigtails (.018 dia)	25 Socket, straight, 1.000" pigtails (.018 dia)
16 Pin, straight, crimped wire	26 Socket, straight, crimped wire
PLATING OPTIONS:	PLATING OPTIONS:
1 50 µ" Au contacts (crimp wire)	1 50 µ" Au contacts (crimp wire)
3 50 µ" Au contacts: 10 µ" Au terminations (solder cup, pigtail)	3 50 µ" Au contacts: 10 µ" Au terminations (solder cup, pigtail)
6 50 µ" Au contacts; Sn/Pb alloy terminations (pigtail) ☒	6 50 µ" Au contacts; Sn/Pb alloy terminations (pigtail) ☒
7 50 µ" Au contacts; SAC305 terminations (pigtail)	7 50 µ" Au contacts; SAC305 terminations (pigtail)
HARDWARE	
STYLE OF HARDWARE:	STYLE OF HARDWARE:
A00 None	A00 None
A01-A49 Latch box, side mounted (cavity number location)	A01-A49 Latch spring, side mounted (cavity number location)
A50 Latch boxes (two end cavities)	A51 Latch springs (two end cavities)
A64 One guide hole (centered)*	A61 One guide pin (centered)*
A65 One guide hole (first cavity)	A62 One guide pin (first cavity)
A66 One guide hole (last cavity)	A63 One guide pin (last cavity)
A68 Two guide holes (two end cavities)	A67 Two guide pins (two end cavities)
A69 One threaded hole (centered)*	A72 One lockscrew (centered)*, uninstalled
AHX One guide hole (cavity #2 - #9)	APX One guide pin (cavity #2 - #9)
ATX One threaded hole (cavity #2 - #9)	ALX One lockscrew (cavity #2 - #9), uninstalled
POLARIZATION / WIRING:	POLARIZATION / WIRING
00 None	00 None
XX For wiring codes, see pages MA-3 & MA-4	XX For wiring codes, see pages MA-3 & MA-4

* = To determine location, divide the total number of cavities by two and round to the next whole number, if result is a fraction. See page M-15. See MA strip guidelines, page M-15, for location examples & visual clarification.

☒ = Option not RoHS compliant

AirBorn

1 · ROW
Strip Connectors
Board to Cable
.050"
MA-1
2 thru 60 Contacts

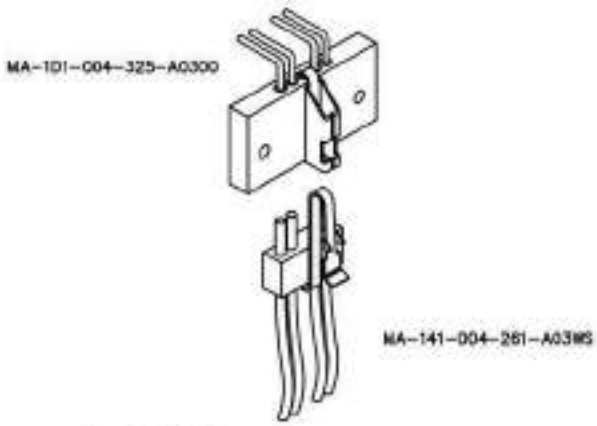

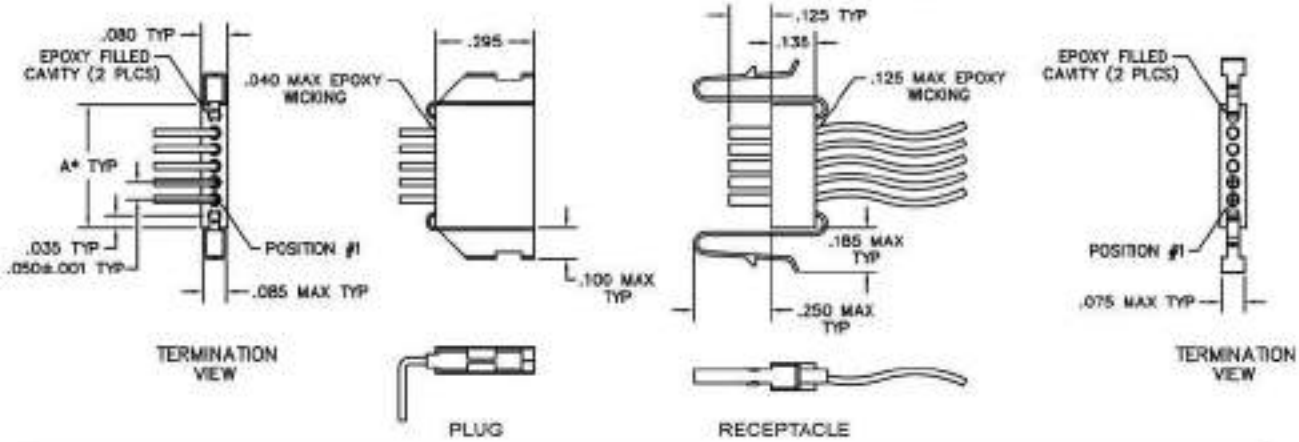

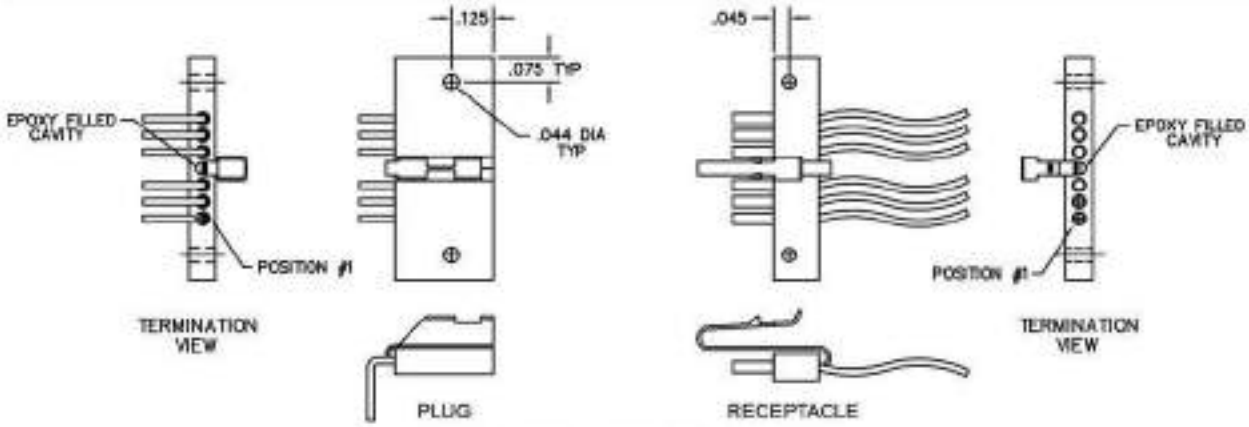

OPTIONAL MOUNTING HOLES

DIMENSIONS

To determine connector length (Dim "A"):

Multiply the number of cavities in one row by .050"	. *
Add fixed end lengths (constant, .010" x 2)	0.02"
Add .150" for each mounting hole	. *
Total Length:	. *

Notes:
Length over 2" may require support to insure alignment.
When using one lockscrew, use centermost available hole.
* = Maximum length is 3.020". Maximum number of contacts must be reduced to accommodate hardware and mounting holes.

AirBorn

LEAD CONFIGURATION OPTIONS

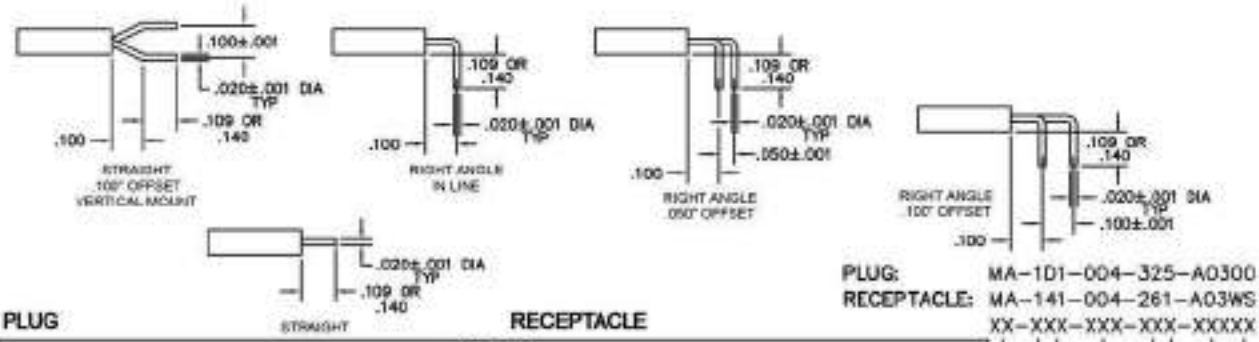

PLUG: MA-1D1-004-325-A0300
RECEPTACLE: MA-141-004-261-A03WS

XX-XXX-XXX-XXX-XXXXX

PLUG	RECEPTACLE
SERIES	
MA .050" Microminiature Strip Connector	MA .050" Microminiature Strip Connector
BODY	
1 1-Row	1 1-Row
BODY STYLE: (Material: Polyphenylene sulfide)	BODY STYLE: (Material: Polyphenylene sulfide)
11 Plug, straight, with mounting holes	21 Receptacle, straight, with mounting holes
31 Plug, straight, without mounting holes	41 Receptacle, straight, without mounting holes
51 Plug, right angle, .050" offset, with mounting holes	61 Receptacle, right angle, .050" offset, with mounting holes
71 Plug, right angle, .100" offset, with mounting holes	81 Receptacle, right angle, .100" offset, with mounting holes
91 Plug, right angle, .050" offset, without mounting holes	A1 Receptacle, right angle, .050" offset, without mounting holes
B1 Plug, right angle, .100" offset, without mounting holes	C1 Receptacle, right angle, .100" offset, without mounting holes
D1 Plug, right angle, in line, with mounting holes	E1 Receptacle, right angle, in line, with mounting holes
F1 Plug, right angle, in line, without mounting holes	G1 Receptacle, right angle, in line, without mounting holes
H1 Plug, straight, .100" offset, without mounting holes	J 1 Receptacle, straight, .100" offset, without mounting holes
SIZE	
XXX 002 - 060	XXX 002 - 060
Note: Maximum number of contacts is reduced when using hardware or mounting holes. See dimension chart on M-13.	
CONTACTS	
TYPE CONTACTS/TERMINATIONS:	TYPE CONTACTS/TERMINATIONS:
11 Pin, straight, solder cup	21 Socket, straight, solder cup
12 Pin, straight, PCB leads, .109"	22 Socket, straight, PCB leads, .109"
13 Pin, straight, PCB leads, .140"	23 Socket, straight, PCB leads, .140"
14 Pin, straight, .500" pigtails (.018 dia)	24 Socket, straight, .500" pigtails (.018 dia)
15 Pin, straight, 1.000" pigtails (.018 dia)	25 Socket, straight, 1.000" pigtails (.018 dia)
16 Pin, straight, crimped wire	26 Socket, straight, crimped wire
32 Pin, right angle, PCB leads, .109"	43 Socket, right angle, PCB leads, .109"
33 Pin, right angle, PCB leads, .140"	44 Socket, right angle, PCB leads, .140"
PLATING OPTIONS:	PLATING OPTIONS:
1 50 µ" Au contacts (crimp wire)	1 50 µ" Au contacts (crimp wire)
3 50 µ" Au contacts; 10 µ" Au terminations (solder cup, pigtail, PCB leads)	3 50 µ" Au contacts; 10 µ" Au terminations (solder cup, pigtail, PCB leads)
5 50 µ" Au contacts; Sn/Pb alloy terminations (dip solder, pigtail, PCB leads) ☒	5 50 µ" Au contacts; Sn/Pb alloy terminations (dip solder, pigtail, PCB leads) ☒
7 50 µ" Au contacts; SAC305 terminations (pigtail, PCB leads)	7 50 µ" Au contacts; SAC305 terminations (pigtail, PCB leads)
HARDWARE	
STYLE OF HARDWARE:	STYLE OF HARDWARE:
A00 None	A00 None
A01-A49 Latch box, side mounted (cavity number location)	A01-A49 Latch spring, side mounted (cavity number location)
A50 Latch boxes (two end cavities).**	A51 Latch springs (two end cavities).**
A64 One guide hole (centered)*	A61 One guide pin (centered)*
A65 One guide hole (first cavity)	A62 One guide pin (first cavity)
A66 One guide hole (last cavity)	A63 One guide pin (last cavity)
A68 Two guide holes (two end cavities)	A67 Two guide pins (two end cavities)
A69 One threaded hole (centered)*	A72 One lockscrew (centered)*
AHX One guide hole (cavity #2 - #9)	APX One guide pin (cavity #2 - #9)
ATX One threaded hole (cavity #2 - #9)	ALX One lockscrew (cavity #2 - #9)
POLARIZATION / WIRING:	POLARIZATION / WIRING
00 None	00 None
XX For wiring codes, see pages MA-3 & MA-4	XX For wiring codes, see pages MA-3 & MA-4

* = To determine location, divide the total number of cavities by two and round to the next whole number, if result is a fraction. See page M-15.
** = Not available with mounting holes.
See MA strip guidelines, page M-15, for location examples & visual clarification.

☒ = Option not RoHS compliant

AirBorn

1 • ROW
Strip Connectors with Latches

.050"

MA-1

3 thru 60 Contacts

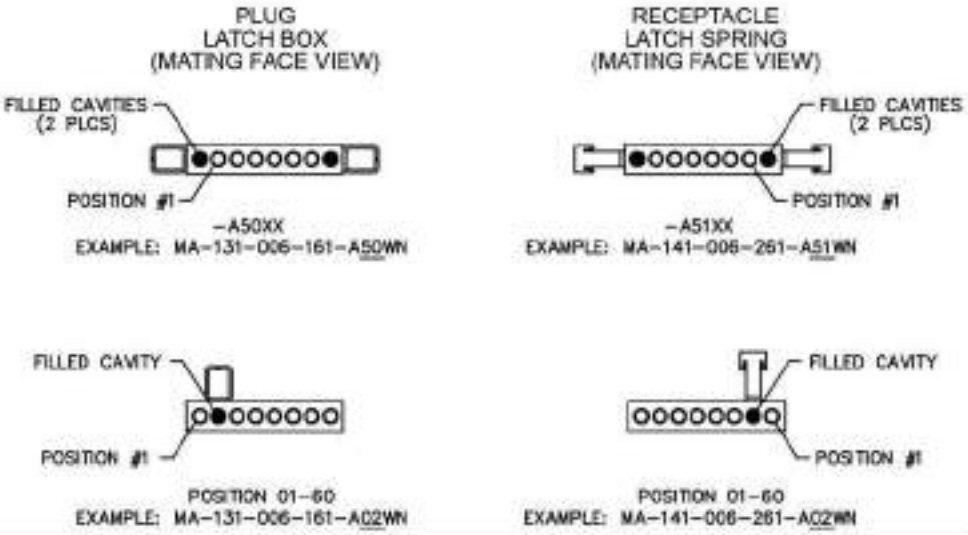

MA Strip Guidelines
For "A" designator in hardware portion of part number

1. Any cavity that has a contact is considered an electrical position (including dummy contact).
2. All hardware locations, holes and/or epoxy filled cavities are considered mechanical positions.
3. Omit holes on board layout for mechanical positions and renumber board layout accordingly, except connectors with mechanical positon(s) in end cavity(ies).
   See board layout examples, pages M-16 thru M-22.
4. These guidelines apply for all hardware options, including guide holes (mechanical locations).
5. Do not skip wire colors on stranded wire assemblies.
6. Spacers underneath the connector are recommended when R/A PCB mount connectors with mounting holes are used and the PCB had irregularities greater than .004" underneath the connector.

To determine hardware location number:
1. Divide the total number of cavities by two (including hardware cavity).
2. Round to the next whole number if result is a fraction.

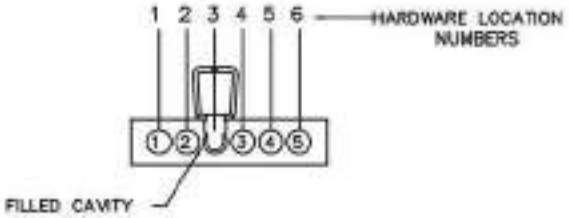

PLUG
5 POSITION, 1 ROW
(MATING FACE VIEW)

The connector above has 6 cavities with 5 live contacts.
(5 electrical positions & 1 mechanical position)

To determine the hardware location number:
6 cavities ÷ 2 = 3
Hardware would be placed in location #3

Board mount connectors, right angle offset (.100") with mounting holes
(6 electrical positions)

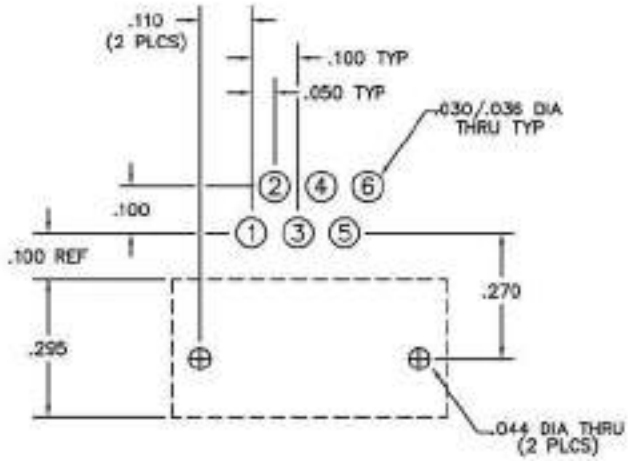

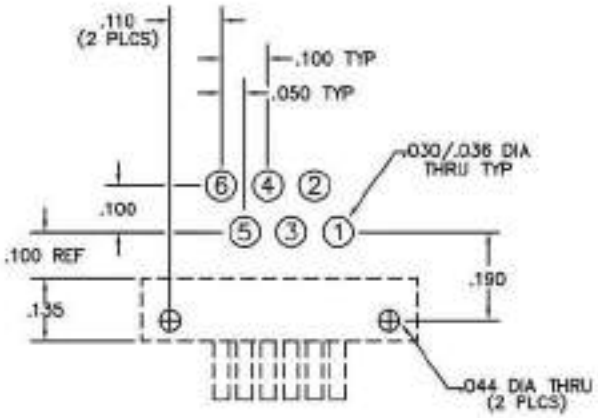

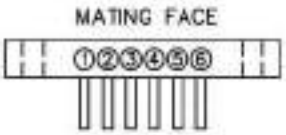

PLUG
MA-171-006-325-A0000

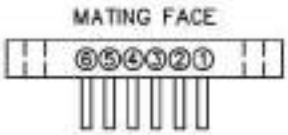

RECEPTACLE
MA-181-006-435-A0000

Crimped wire connectors, straight without mounting holes
(6 electrical positions)

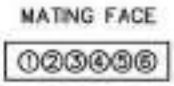

PLUG
MA-131-006-161-A00WA

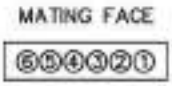

RECEPTACLE
MA-141-006-261-A00WA

WIRE CONNECT CHART

1 — BLK
2 — BRN
3 — RED
4 — ORN
5 — YEL
6 — GRN

AirBorn

Board mount connectors, right angle offset (.100") with mounting holes. Side mount latch, centered.

(5 electrical positions, 1 mechanical positions)

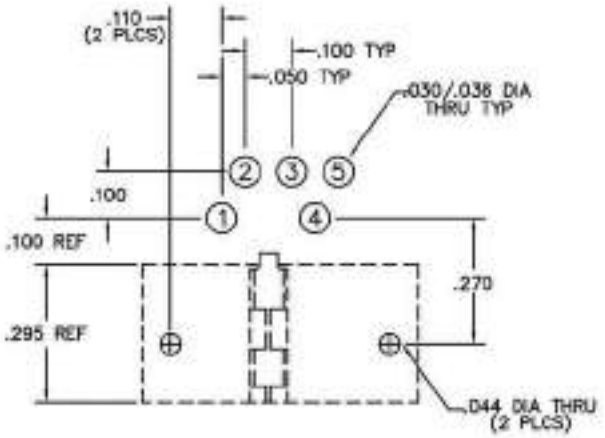

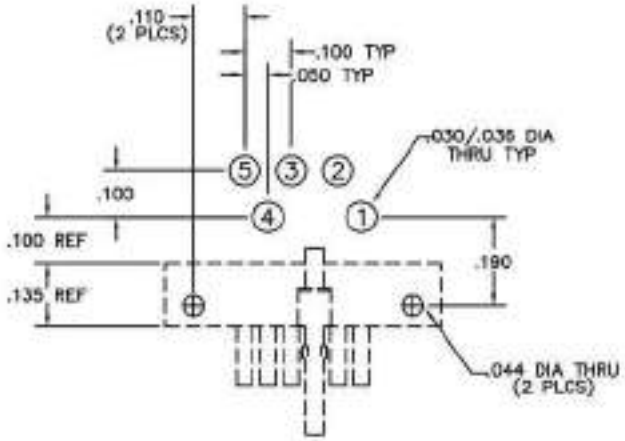

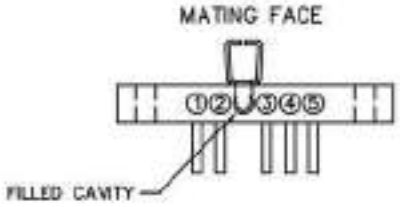

PLUG
MA-171-005-325-A0300

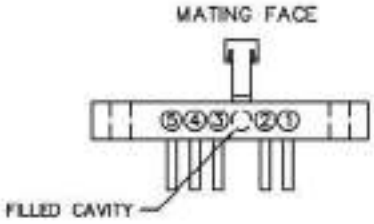

RECEPTACLE
MA-181-005-435-A0300

Crimped wire connectors, straight with mounting holes. Side mount latch, centered.

(5 electrical positions, 1 mechanical positions)

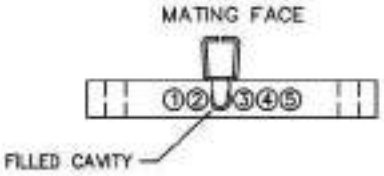

PLUG
MA-111-005-161-A03WA

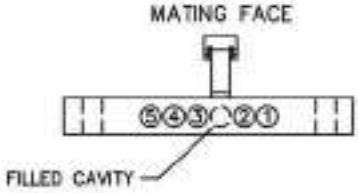

RECEPTACLE
MA-121-005-261-A03WA

WIRE CONNECT CHART

1 — BLK
2 — BRN
3 — RED
4 — ORN
5 — YEL

Board mount connectors, right angle offset (.100") without mounting holes
End mount latches, 2 end cavities*
(6 electrical positions, 2 mechanical positions)

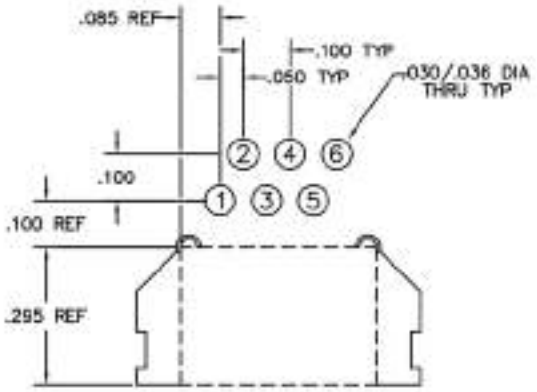

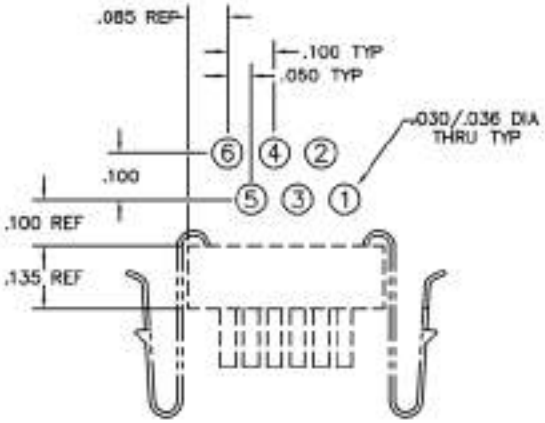

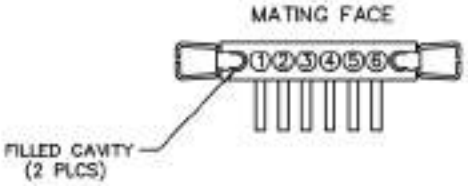

PLUG
MA-1B1-006-325-A5000

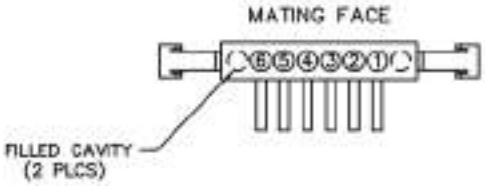

RECEPTACLE
MA-1C1-006-435-A5100

* = THIS IS THE EXCEPTION AS NOTED IN "MA STRIP GUIDELINES", PAGE M-15, NOTE 3.

Crimped wire connectors, straight without mounting holes
End mount latches, 2 end cavities
(3 electrical positions, 2 mechanical positions)

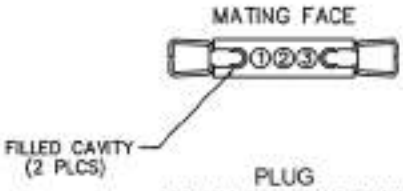

PLUG
MA-131-003-161-A50WA

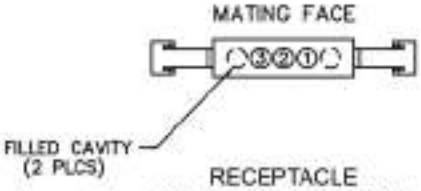

RECEPTACLE
MA-141-003-261-A51WA

WIRE CONNECT CHART

1 — BLK
2 — BRN
3 — RED

AirBorn

Board mount connectors, right angle inline (.100") with mounting holes
Side mount latch, centered

(5 electrical positions, 1 mechanical positions)

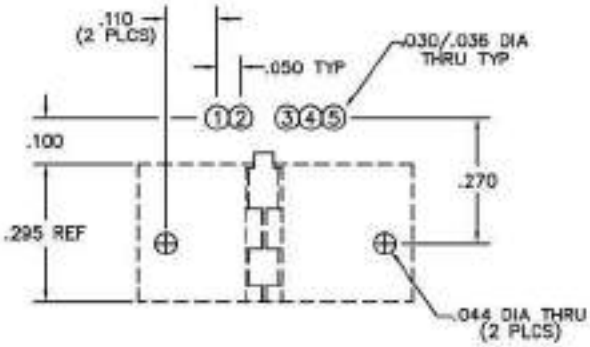

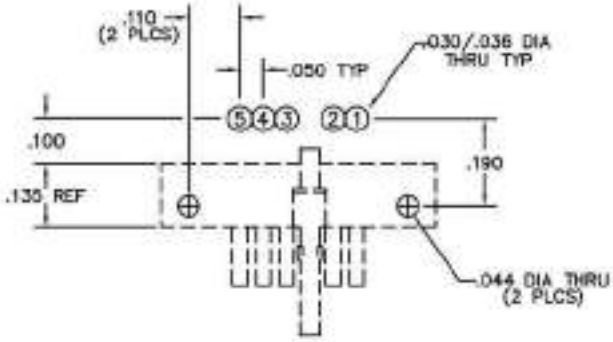

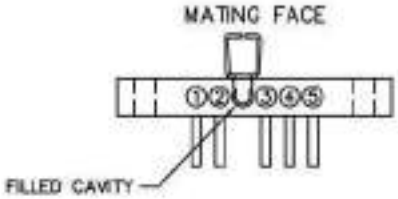

PLUG
MA-1D1-005-325-A0300

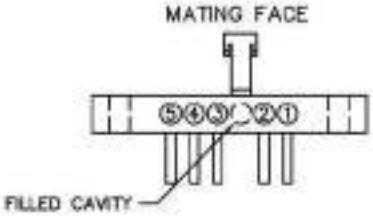

RECEPTACLE
MA-1E1-005-435-A0300

Crimped wire connectors, straight without mounting holes
Side mount latch, centered

(5 electrical positions, 1 mechanical positions)

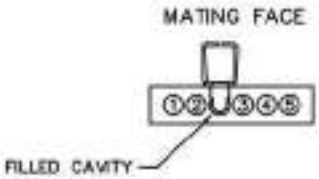

PLUG
MA-131-005-161-A03WA

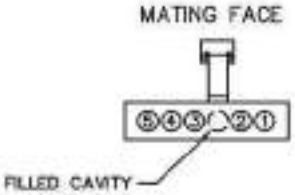

RECEPTACLE
MA-141-005-261-A03WA

WIRE CONNECT CHART

1 — BLK
2 — BRN
3 — RED
4 — ORN
5 — YEL

Board mount connectors, straight offset (.100") without mounting holes
Two guide holes/two end cavities
(4 electrical positions, 2 mechanical positions)

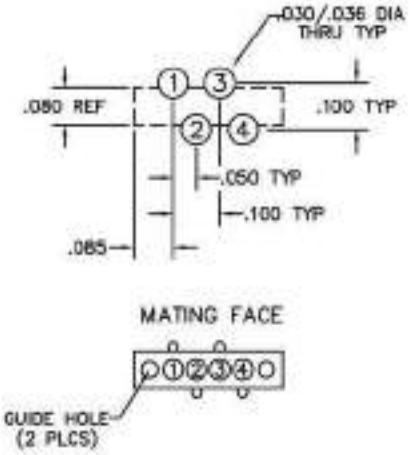

PLUG
MA-1H1-004-145-A6800

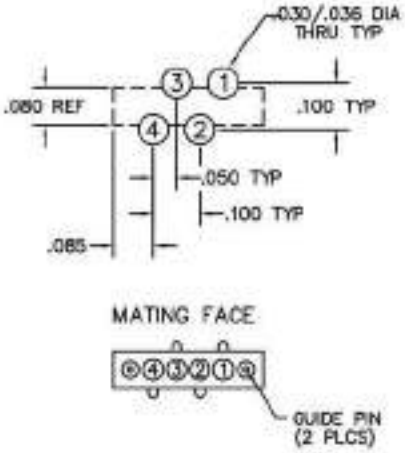

RECEPTACLE
MA-1J1-004-245-A6700

Board mount connectors, straight without mounting holes
One guide hole/pin, first cavity
(5 electrical positions, 1 mechanical position)

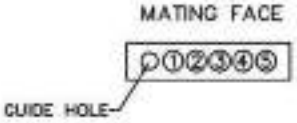

PLUG
MA-131-005-125-A6500

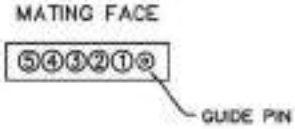

RECEPTACLE
MA-141-005-225-A6200

Crimped wire connectors, straight without mounting holes
Two guide holes/two end cavities
(4 electrical positions, 2 mechanical positions)

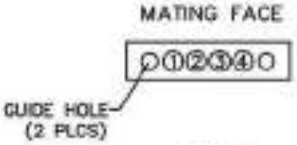

PLUG
MA-131-004-161-A68WA

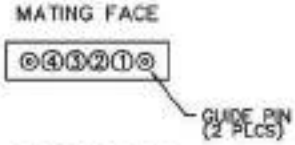

RECEPTACLE
MA-141-004-261-A67WA

WIRE CONNECT CHART

1 — BLK
2 — BRN
3 — RED
4 — ORN

AirBorn

Board mount connectors, right angle offset (.050") with mounting holes
Guide hole/pin, last cavity
(5 electrical positions, 1 mechanical positions)

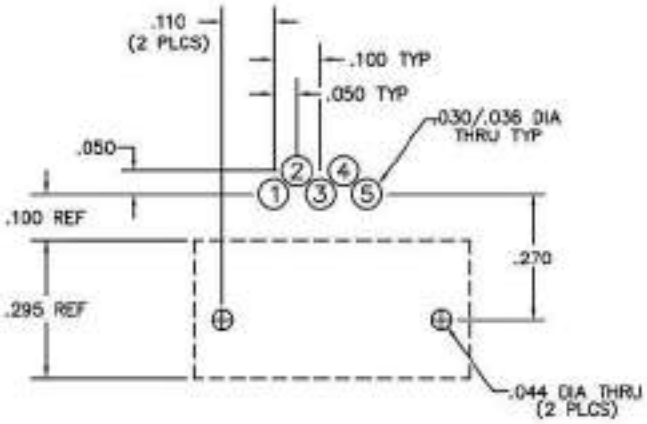

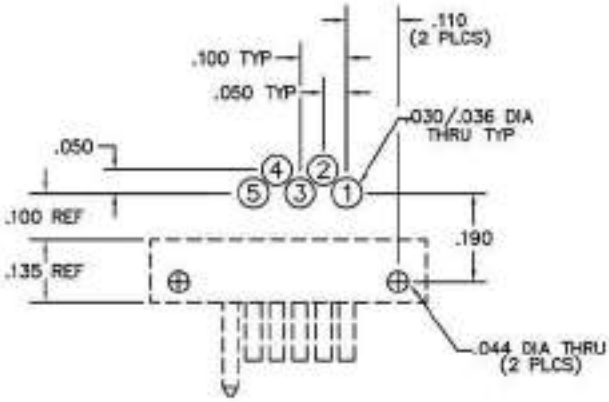

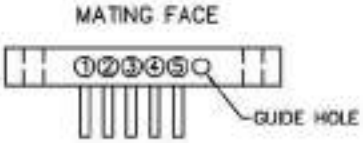

PLUG
MA-151-005-325-A6600

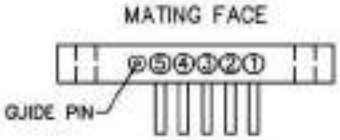

RECEPTACLE
MA-161-005-435-A6300

Crimped wire connectors, straight with mounting holes
Guide hole/pin, last cavity
(5 electrical positions, 1 mechanical positions)

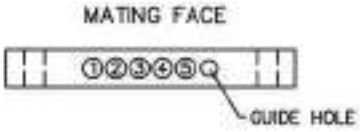

PLUG
MA-111-005-161-A66WA

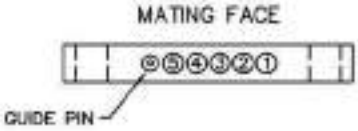

RECEPTACLE
MA-121-005-261-A63WA

WIRE CONNECT CHART

1 — BLK
2 — BRN
3 — RED
4 — ORN
5 — YEL

Board mount connectors, right angle offset (.050") without mounting holes
Guide hole/pin, first cavity*
(5 electrical positions, 1 mechanical positions)

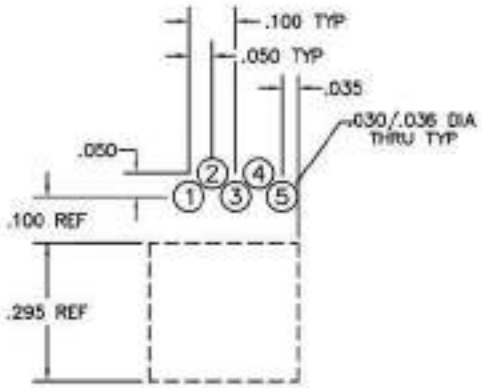

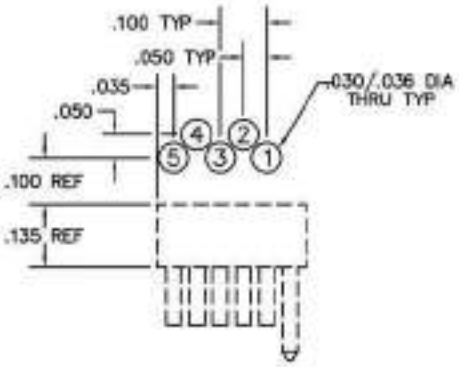

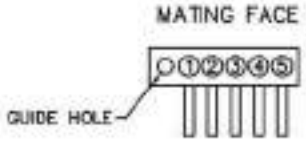

PLUG
MA-191-005-325-A6500

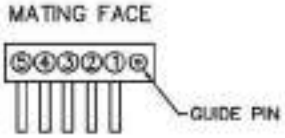

RECEPTACLE
MA-1A1-005-435-A6200

* = THIS IS THE EXCEPTION AS NOTED IN "MA STRIP GUIDELINES", PAGE M-15, NOTE 3.

Crimped wire connectors, straight without mounting holes
Guide hole/pin, first cavity
(5 electrical positions, 1 mechanical positions)

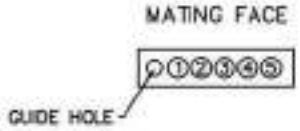

PLUG
MA-131-005-161-A65WA

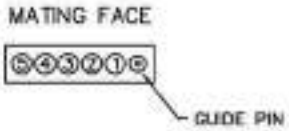

RECEPTACLE
MA-141-005-261-A62WA

WIRE CONNECT CHART

1 — BLK
2 — BRN
3 — RED
4 — ORN
5 — YEL

AirBorn

2 · ROW

Strip Connectors
Cable to Cable

.050"

MA-2

4 thru 128 Contacts

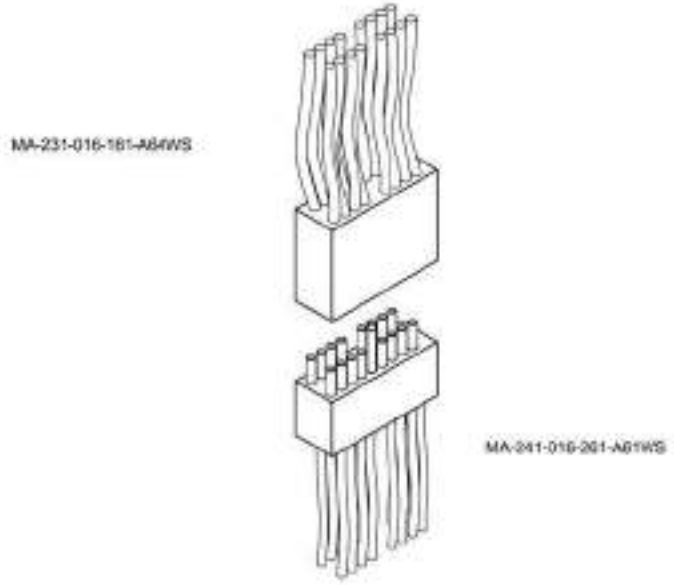

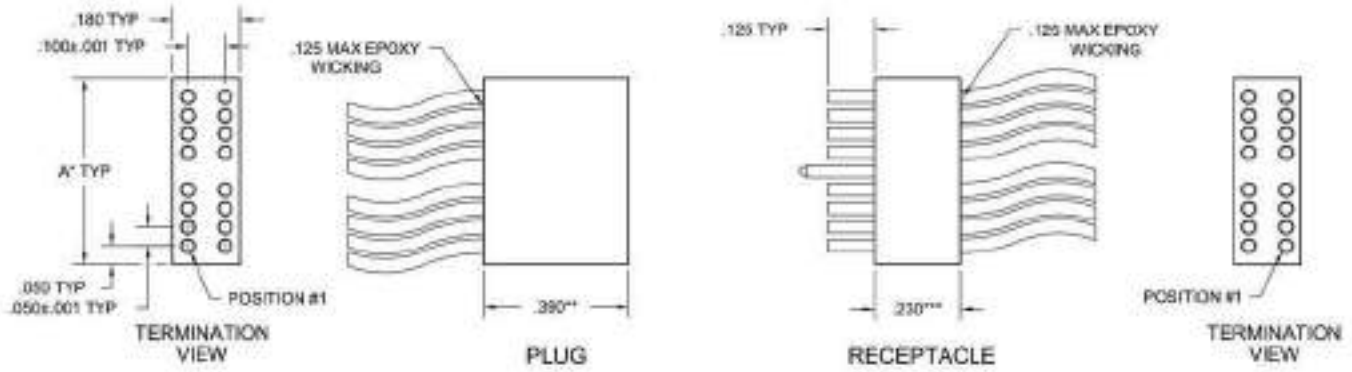

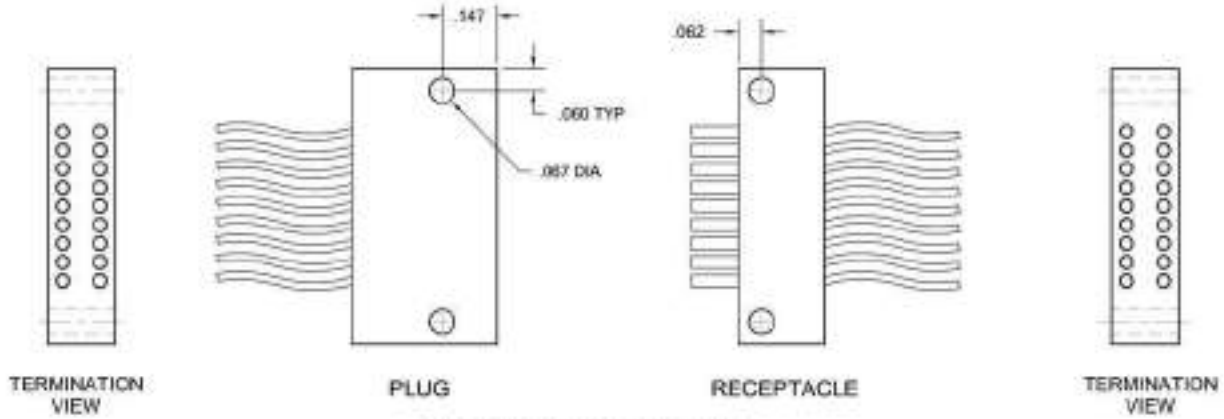

OPTIONAL MOUNTING HOLES

DIMENSIONS

To determine connector length (Dim "A"):

Multiply the number of cavities in one row by .050"	. "
Add fixed end lengths (constant, .025" x 2)	0.05"
Add .085" for each mounting hole	"
Total Length:	. "

Notes:
Length over 2" may require support to insure alignment.
* = Maximum length is 3.420". Maximum number of contacts must be reduced to accommodate hardware and mounting holes.
** = For solder cup or board mount applications, .390" becomes .295"
*** = For solder cup or board mount applications, .230" becomes .135"

PLUG: MA–231–016–161–A64WS
RECEPTACLE: MA–241–016–261–A61WS
XX–XXX–XXX–XXX–XXXXX

PLUG	RECEPTACLE
SERIES	
MA .050" Microminiature Strip Connector	MA .050" Microminiature Strip Connector
BODY	
2 2-Row	2 2-Row
BODY STYLE: (Material: Polyphenylene sulfide)	BODY STYLE: (Material: Polyphenylene sulfide)
11 Plug, straight, with mounting holes	21 Receptacle, straight, with mounting holes
31 Plug, straight, without mounting holes	41 Receptacle, straight, without mounting holes
SIZE	
XXX 004 -128	XXX 004 -128
Note: Maximum number of contacts is reduced when using hardware or mounting holes. See dimension chart on M-23.	
CONTACTS	
TYPE CONTACTS/TERMINATIONS:	TYPE CONTACTS/TERMINATIONS:
11 Pin, straight, solder cup	21 Socket, straight, solder cup
14 Pin, straight, .500" pigtails (.018 dia)	24 Socket, straight, .500" pigtails (.018 dia)
15 Pin, straight, 1.000" pigtails (.018 dia)	25 Socket, straight, 1.000" pigtails (.018 dia)
16 Pin, straight, crimped wire	26 Socket, straight, crimped wire
PLATING OPTIONS:	PLATING OPTIONS:
1 50 µ" Au contacts (crimp wire)	1 50 µ" Au contacts (crimp wire)
3 50 µ" Au contacts; 10 µ" Au terminations (solder cup, pigtail)	3 50 µ" Au contacts; 10 µ" Au terminations (solder cup, pigtail)
5 50 µ" Au contacts; Sn/Pb alloy terminations (pigtail) ☒	5 50 µ" Au contacts; Sn/Pb alloy terminations (pigtail) ☒
7 50 µ" Au contacts; SAC305 terminations (pigtail)	7 50 µ" Au contacts; SAC305 terminations (pigtail)
HARDWARE	
STYLE OF HARDWARE:	STYLE OF HARDWARE:
A00 None	A00 None
ABC Latch box, side mounted (centered)* See page M-27	ALC Latch spring, side mounted (centered)* See page M-27
A50 Latch boxes (two end cavities). See page M-27**	A51 Latch springs, (two end cavities). See page M-27**
A52 Latch boxes (two end cavities). See page M-27**	A53 Latch springs, (two end cavities). See page M-27**
A54 Latch boxes (two end cavities). See page M-27**	A55 Latch springs, (two end cavities). See page M-27**
A56 Latch boxes (two end cavities). See page M-27**	A57 Latch springs, (two end cavities). See page M-27**
A64 One guide hole (centered)*	A61 One guide pin (centered)*
A65 One guide hole (first cavity)	A62 One guide pin (first cavity)
A66 One guide hole (last cavity)	A63 One guide pin (last cavity)
A68 Two guide holes (first & last cavity)	A67 Two guide pins (first & last cavity)
AHX One guide hole (cavity #2 - #9)	APX One guide pin (cavity #2 - #9)
POLARIZATION / WIRING:	POLARIZATION / WIRING
00 None	00 None
XX For wiring codes, see page MA-3 & MA-4	XX For wiring codes, see page MA-3 & MA-4

* = To determine location, divide the total number of cavities (in one row) by two and round to the next whole number, if result is a fraction. See page M-28.
** = Not available with mounting holes.
See MA strip guidelines, page M-28, for location examples & visual clarification.
Connector part number must have even number of contacts.
Consult factory for non-standard requirements.

☒ = Option not RoHS compliant

AirBorn

2 • ROW

Strip Connectors Board to Cable

.050"

MA-2

4 thru 128 Contacts

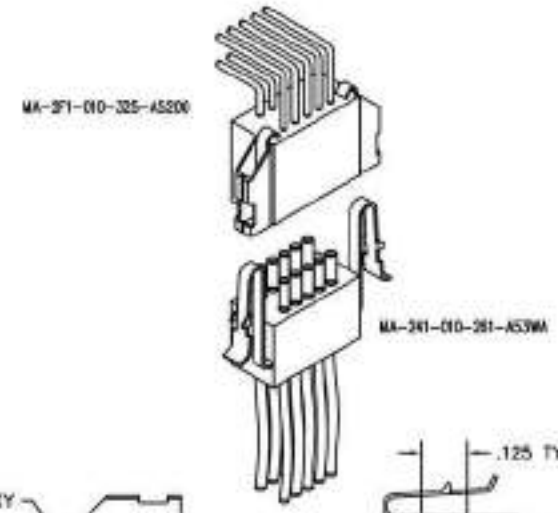

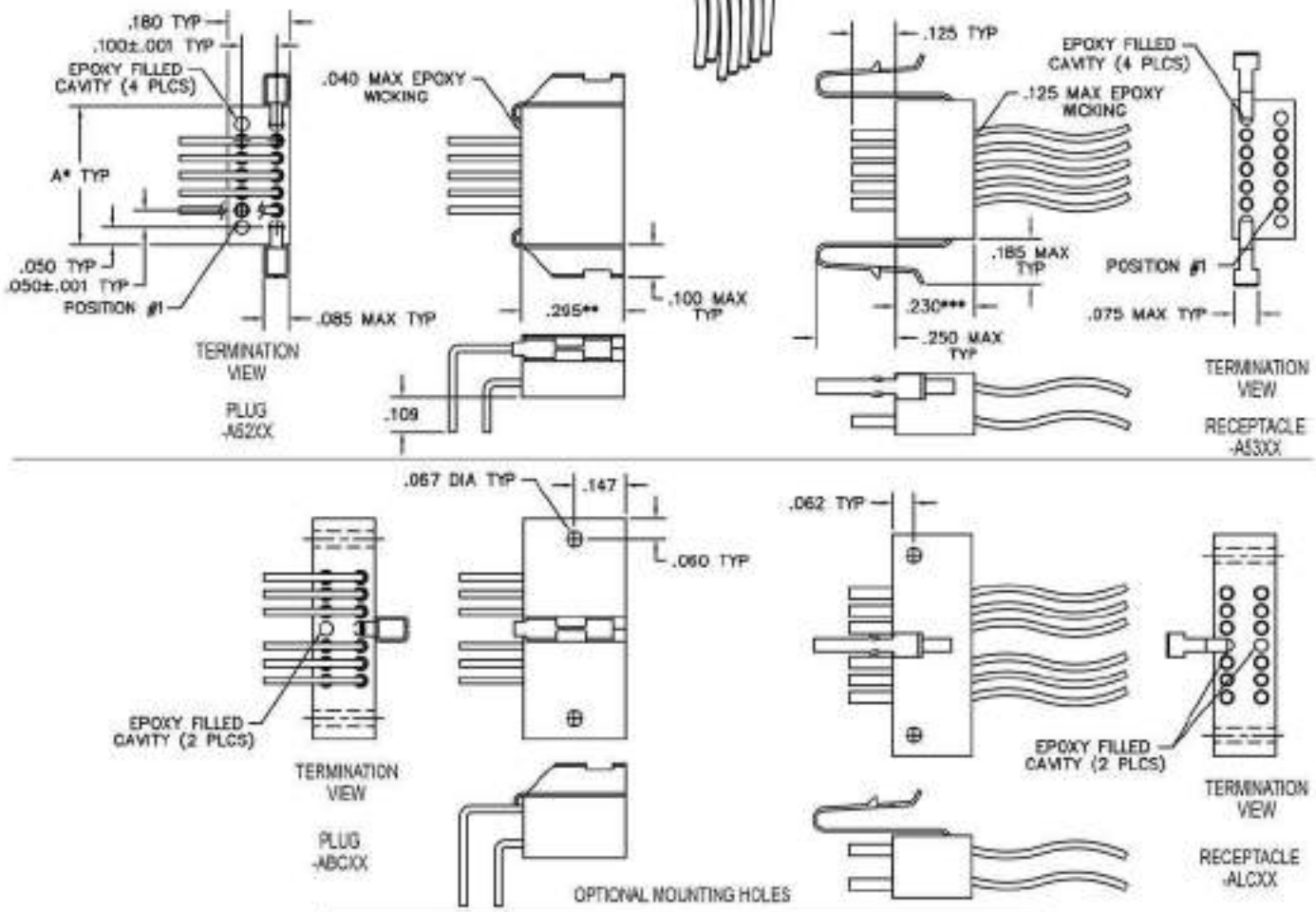

DIMENSIONS

To determine connector length (Dim "A"):

Multiply the number of cavities in one row by .050"	____"
Add fixed end lengths (constant, .025" x 2)	0.05"
Add .085" for each mounting hole	____"
Total Length:	____"

Notes:

Length over 2" may require support to insure alignment

* = Maximum length is 3.420". Maximum number of contacts must be reduced to accommodate hardware and mounting holes.

** = For cable applications, .295" becomes .390"

*** = For solder cup or board mount applications, .230" becomes .135"

LEAD CONFIGURATION OPTIONS

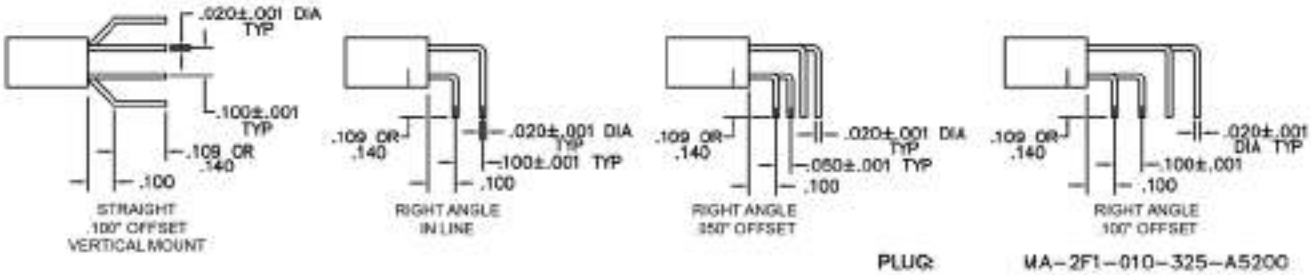

PLUG: MA-2F1-010-325-A5200
RECEPTACLE: MA-241-010-261-A53WA
XX-XXX-XXX-XXX-XXXXX

PLUG	RECEPTACLE
SERIES	
MA .050" Microminiature Strip Connector	MA .050" Microminiature Strip Connector
BODY	
2 2-Row	2 2-Row
BODY STYLE: (Material: Polyphenylene sulfide)	BODY STYLE: (Material: Polyphenylene sulfide)
11 Plug, straight, with mounting holes	21 Receptacle, straight, with mounting holes
31 Plug, straight, without mounting holes	41 Receptacle, straight, without mounting holes
51 Plug, right angle, .050" offset, with mounting holes	61 Receptacle, right angle, .050" offset, with mounting holes
71 Plug, right angle, .100" offset, with mounting holes	81 Receptacle, right angle, .100" offset, with mounting holes
91 Plug, right angle, .050" offset, without mounting holes	A1 Receptacle, right angle, .050" offset, without mounting holes
B1 Plug, right angle, .100" offset, without mounting holes	C1 Receptacle, right angle, .100" offset, without mounting holes
D1 Plug, right angle, in line, with mounting holes	E1 Receptacle, right angle, in line, with mounting holes
F1 Plug, right angle, in line, without mounting holes	G1 Receptacle, right angle, in line, without mounting holes
H1 Plug, straight, .100" offset, without mounting holes	J 1 Receptacle, straight, .100" offset, without mounting holes
SIZE	
XXX 004- 128	XXX 004-128
Note: Maximum number of contacts is reduced when using hardware or mounting holes. See dimension chart on M-25.	
CONTACTS	
TYPE CONTACTS/TERMINATIONS:	TYPE CONTACTS/TERMINATIONS:
11 Pin, straight, solder cup	21 Socket, straight, solder cup
12 Pin, straight, PCB leads, .109"	22 Socket, straight, PCB leads, .109"
13 Pin, straight, PCB leads, .140"	23 Socket, straight, PCB leads, .140"
14 Pin, straight, .500" pigtails (.018 dia)	24 Socket, straight, .500" pigtails (.018 dia)
15 Pin, straight, 1.000" pigtails (.018 dia)	25 Socket, straight, 1.000" pigtails (.018 dia)
16 Pin, straight, crimped wire	26 Socket, straight, crimped wire
32 Pin, right angle, PCB leads, .109"	43 Socket, right angle, PCB leads, .109"
33 Pin, right angle, PCB leads, .140"	44 Socket, right angle, PCB leads, .140"
PLATING OPTIONS:	PLATING OPTIONS:
1 50 µ" Au contacts (crimp wire)	1 50 µ" Au contacts (crimp wire)
3 50 µ" Au contacts; 10 µ" Au terminations (solder cup, pigtail, PCB leads)	3 50 µ" Au contacts; 10 µ" Au terminations (solder cup, pigtail, PCB leads)
5 50 µ" Au contacts; Sn/Pb alloy terminations (pigtail, PCB leads) ☒	5 50 µ" Au contacts; Sn/Pb alloy terminations (pigtail, PCB leads) ☒
7 50 µ" Au contacts; SAC305 terminations (pigtail, PCB leads)	7 50 µ" Au contacts; SAC305 terminations (pigtail, PCB leads)
HARDWARE	
STYLE OF HARDWARE:	STYLE OF HARDWARE:
A00 None	A00 None
ABC Latch box, side mounted (centered)* See page M-27	ALC Latch spring, side mounted (centered)* See page M-27
A50 Latch boxes (two end cavities). See page M-27**	A51 Latch springs, (two end cavities). See page M-27**
A52 Latch boxes (two end cavities). See page M-27**	A53 Latch springs, (two end cavities). See page M-27**
A54 Latch boxes (two end cavities). See page M-27**	A55 Latch springs, (two end cavities). See page M-27**
A56 Latch boxes (two end cavities). See page M-27**	A57 Latch springs, (two end cavities). See page M-27**
A64 One guide hole (centered)*	A61 One guide pin (centered)*
A65 One guide hole (first cavity)	A62 One guide pin (first cavity)
A66 One guide hole (last cavity)	A63 One guide pin (last cavity)
A68 Two guide holes (first & last cavity)	A67 Two guide pins (first & last cavity)
AHX One guide hole (cavity #2 - #9)	APX One guide pin (cavity #2 - #9)
POLARIZATION / WIRING:	POLARIZATION / WIRING:
00 None	00 None
XX For wiring codes, see page MA-3 & MA-4	XX For wiring codes, see page MA-3 & MA-4

* = To determine location, divide the total number of cavities (in one row) by two and round to the next whole number, if result is a fraction. See page M-28.
** = Not available with mounting holes.
See MA strip guidelines, page M-28, for location examples & visual clarification.
Connector part number must have even number of contacts.
Consult factory for non-standard requirements.
☒ = Option not RoHS compliant

AirBorn

2 · ROW
Strip Connectors with Latches
.050"
MA-2
4 thru 128 Contacts

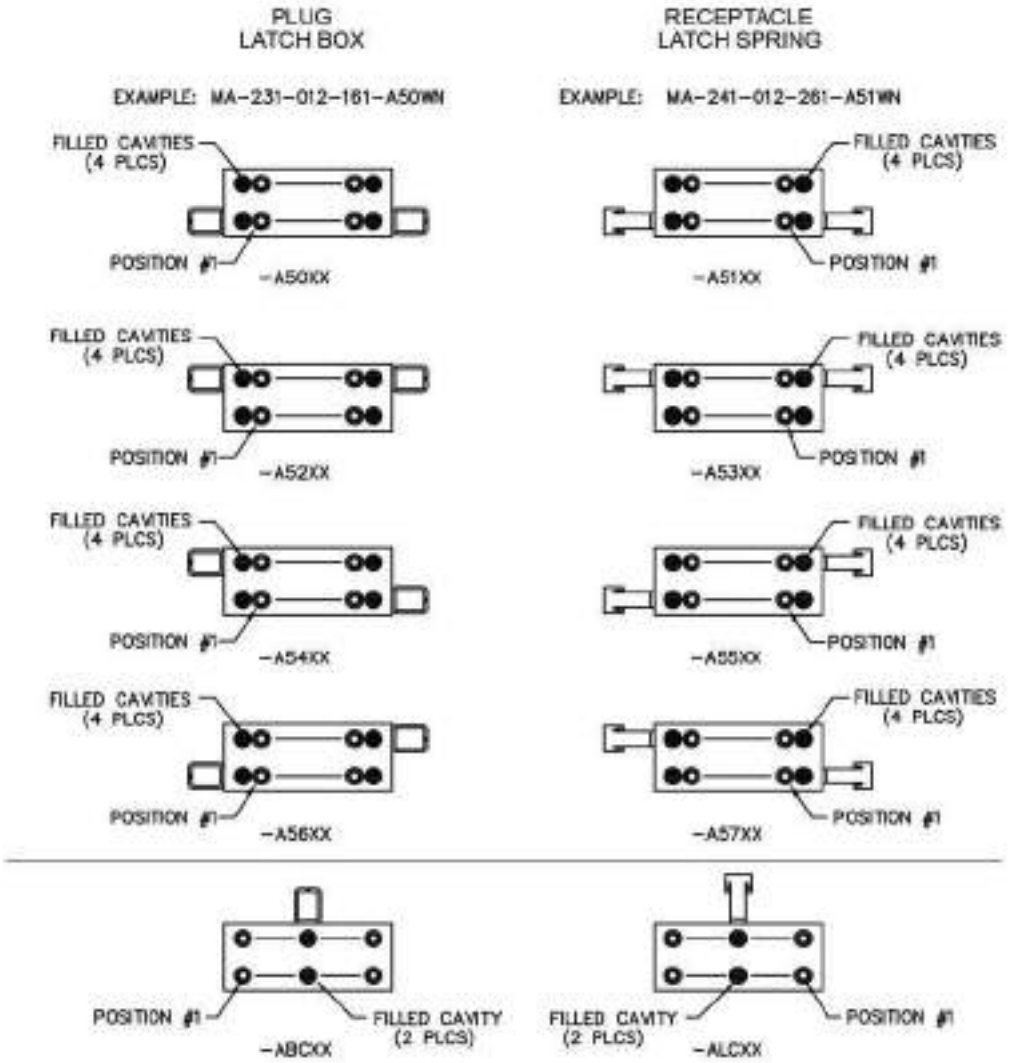

NOTE: ALL DRAWINGS VIEWED FROM MATING FACE

MA Strip Guidelines

For "A" designator in hardware portion of part number

1. Any cavity that has a contact is considered an electrical position (including dummy contact).
2. All hardware locations, holes and/or epoxy filled cavities are considered mechanical positions.
3. The cavity adjacent to a mechanical hole, in opposite row, will be an epoxy filled cavity (two row only).
4. Side mount latch will always be in row two of connector (two row only).
5. Connector must always have an even number of contacts for standard part number (two row only). Consult factory for non-standard requirements.
6. Omit holes on board layout for mechanical positions and renumber board layout accordingly, except connectors with mechanical position(s) in end cavity(ies).
   See board layout examples, pages M-29 thru M-34.
7. These guidelines apply for all hardware options, including guide holes (mechanical locations).
8. Do not skip wire colors on stranded wire assemblies.
9. Spacers underneath the connector are recommended when R/A PCB mount connectors with mounting holes are used and the PCB had irregularities greater than .004" underneath the connector.

To determine centered hardware location number:

1. Divide the total number of cavities in one row by two (including hardware cavity).
2. Round to the next whole number if result is a fraction.
3. Guide hardware will be located in Row 1 and Latch hardware will be in Row 2.

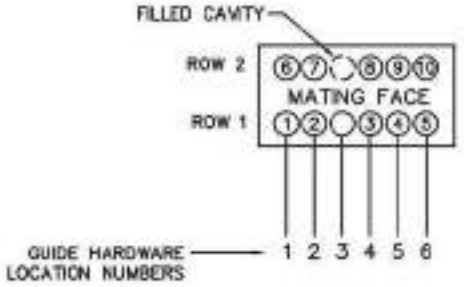

PLUG
(10 POSITION, 2 ROW)

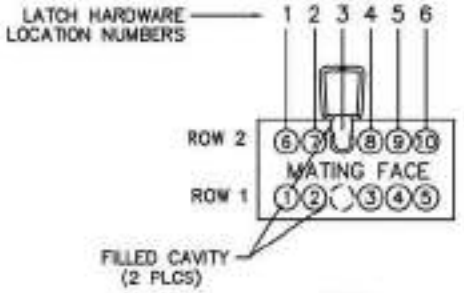

PLUG
(10 POSITION, 2 ROW)

The example above shows 12 cavities with 10 live contacts.
(10 electrical positions & 2 mechanical positions)

To determine the hardware location number:
6 cavities (in one row) ÷2 = 3
Hardware would be placed in location #3.

AirBorn

Board mount connectors, right angle offset (.100") with mounting holes
(12 electrical positions)

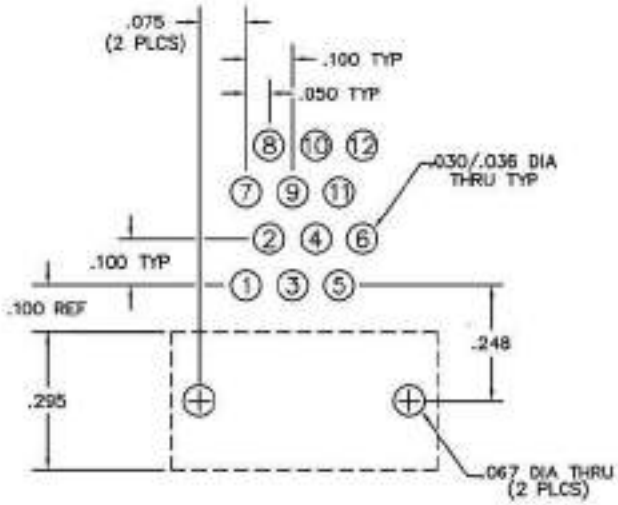

PLUG
MA-271-012-325-A0000

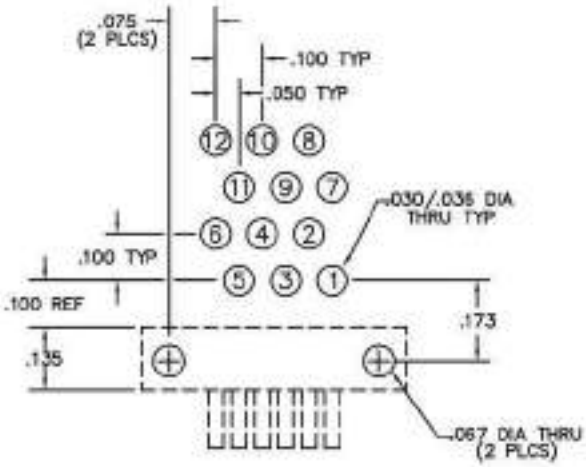

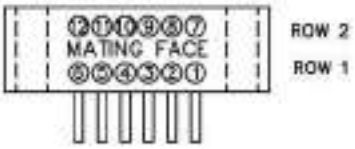

RECEPTACLE
MA-281-012-435-A0000

Crimped wire connectors, straight without mounting holes
(12 electrical positions)

PLUG
MA-231-012-161-A00WA

RECEPTACLE
MA-241-012-261-A00WA

WIRE CONNECT CHART

1	BLK	7	BLU
2	BRN	8	VIO
3	RED	9	GRY
4	ORN	10	WHT
5	YEL	11	WHT/BLK
6	GRN	12	WHT/BRN

Board mount connectors, right angle offset (.100") with mounting holes. Side mount latch, centered.

Note: Side mount latch will always be in row #2 of connector. Not recommended on row #1 for board mount applications.
(10 electrical positions, 2 mechanical positions)

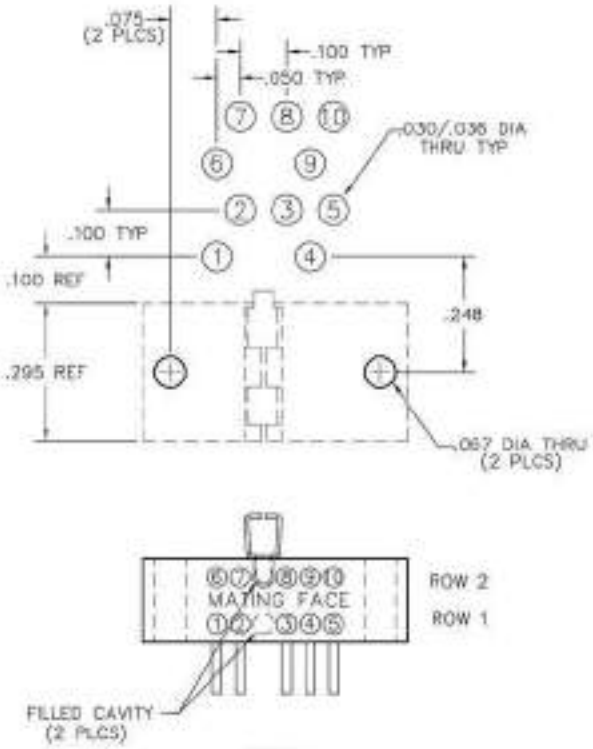

PLUG
MA-271-010-325-ABC00

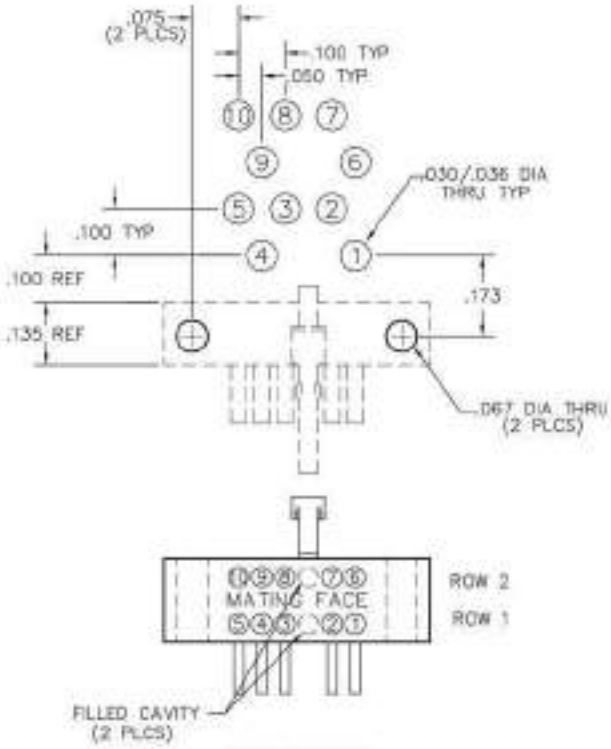

RECEPTACLE
MA-281-010-435-ALC00

Crimped wire connectors, straight with mounting holes. Side mount latch, centered.

Note: Side mount latch will always be in row #2 of connector.
(10 electrical positions, 2 mechanical positions)

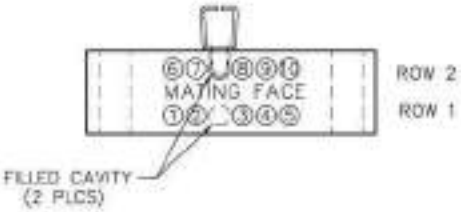

PLUG
MA-211-010-161-ABCWA

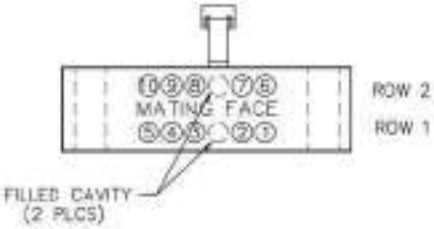

RECEPTACLE
MA-221-010-261-ALCWA

WIRE CONNECT CHART

1	BLK	6	GRN
2	BRN	7	BLU
3	RED	8	VIO
4	ORN	9	GRY
5	YEL	10	WHT

AirBorn

Board mount connectors, right angle offset (.100") without mounting holes
End mount latches, 2 end cavities*

(12 electrical positions, 4 mechanical positions)

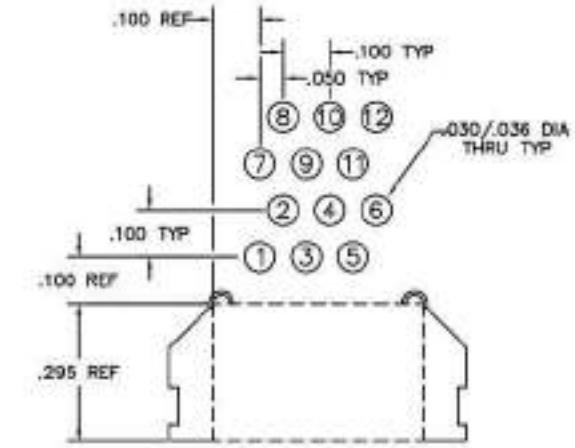

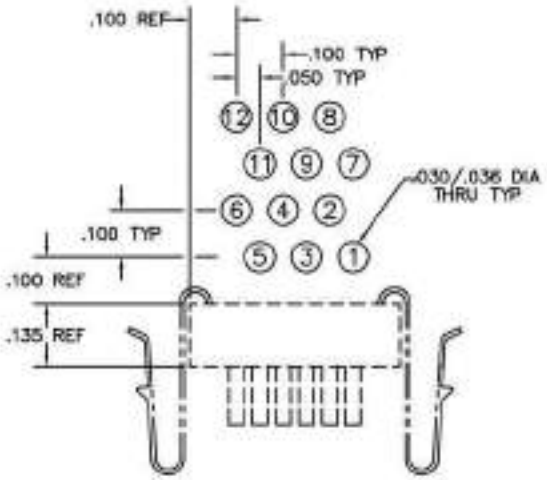

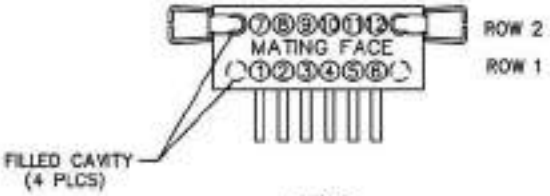

PLUG
MA-2B1-012-325-A5200

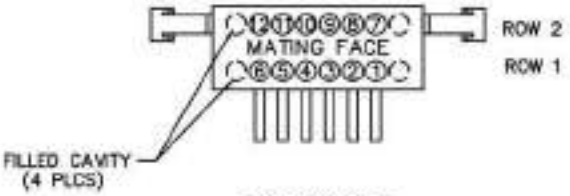

RECEPTACLE
MA-2C1-012-435-A5300

* = THIS IS THE EXCEPTION AS NOTED IN "MA STRIP GUIDELINES", PAGE M-28, NOTE 6.

Crimped wire connectors, straight without mounting holes
End mount latches, 2 end cavities
(6 electrical positions, 4 mechanical positions)

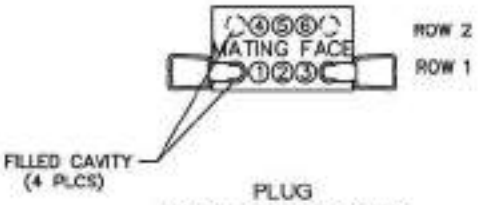

PLUG
MA-231-006-161-A50WA

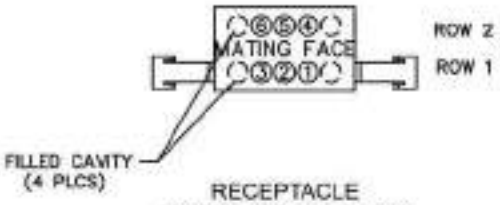

RECEPTACLE
MA-241-006-261-A51WA

WIRE CONNECT CHART

1 — BLK
2 — BRN
3 — RED
4 — ORN
5 — YEL
6 — GRN

Board mount connectors, right angle inline (.100") with mounting holes
Side mount latch, centered

Note: Side mount latch will always be in row #2 of connector. Not recommended on row #1 for board mount applications.

(10 electrical positions, 2 mechanical positions)

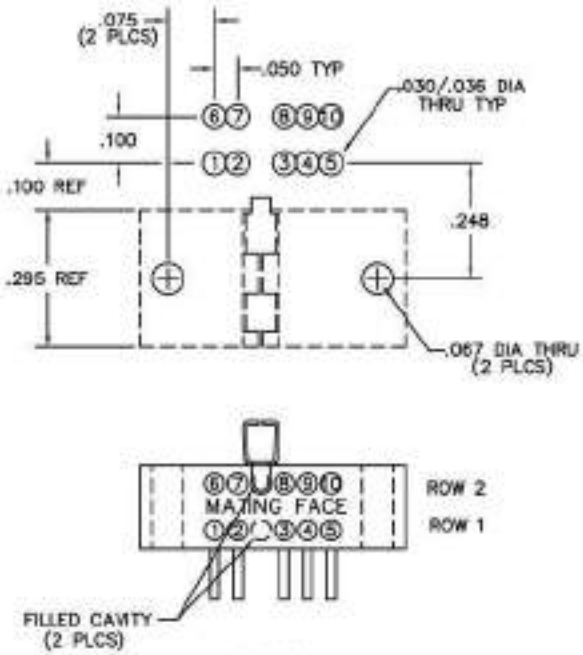

PLUG
MA-2D1-010-325-ABC00

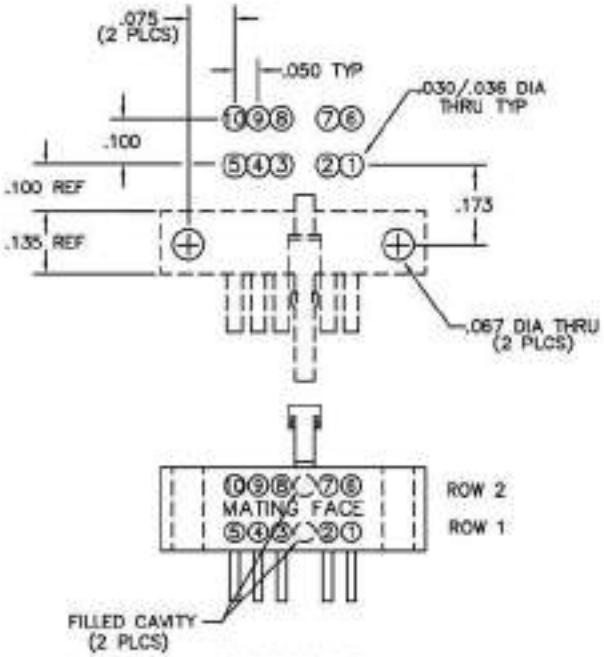

RECEPTACLE
MA-2E1-010-435-ALC00

Crimped wire connectors, straight without mounting holes
Side mount latch, centered

(10 electrical positions, 2 mechanical positions)

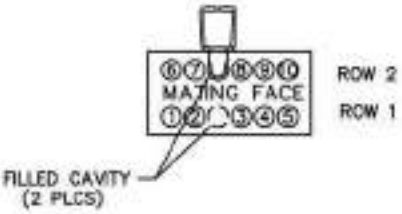

PLUG
MA-231-010-161-ABCWA

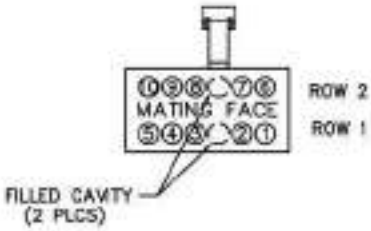

RECEPTACLE
MA-241-010-261-ALCWA

WIRE CONNECT CHART

1	BLK	6	GRN
2	BRN	7	BLU
3	RED	8	VIO
4	ORN	9	GRY
5	YEL	10	WHT

AirBorn

Board mount connectors, straight offset (.100") without mounting holes
Two guide holes/pins, first & last cavities
(8 electrical positions, 4 mechanical positions)

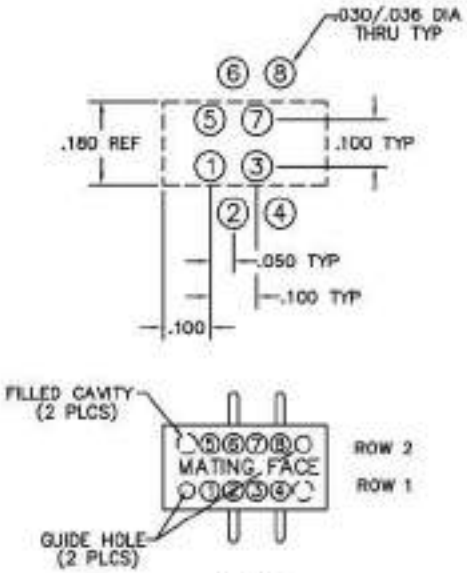

PLUG
MA-2H1-008-145-A6800

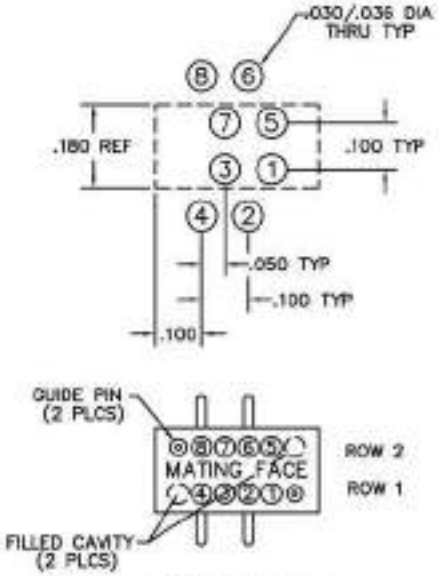

RECEPTACLE
MA-2J1-008-245-A6700

Crimped wire connectors, straight without mounting holes
Two guide holes/pins, first & last cavities
(8 electrical positions, 4 mechanical positions)

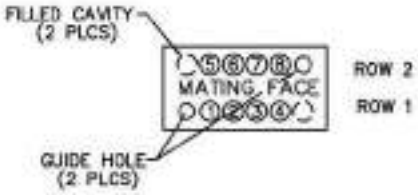

PLUG
MA-231-008-161-A68WA

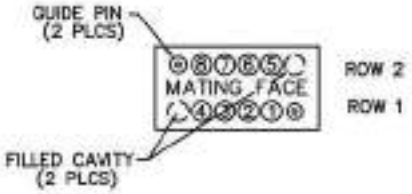

RECEPTACLE
MA-241-008-261-A67WA

WIRE CONNECT CHART

1	BLK	5	YEL
2	BRN	6	GRN
3	RED	7	BLU
4	ORN	8	VIO

Board mount connectors, right angle offset (.050") with mounting holes Guide hole/pin, last cavity
(10 electrical positions, 2 mechanical positions)

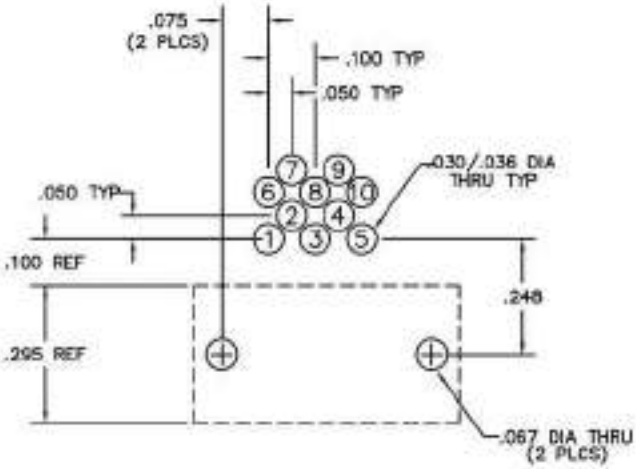

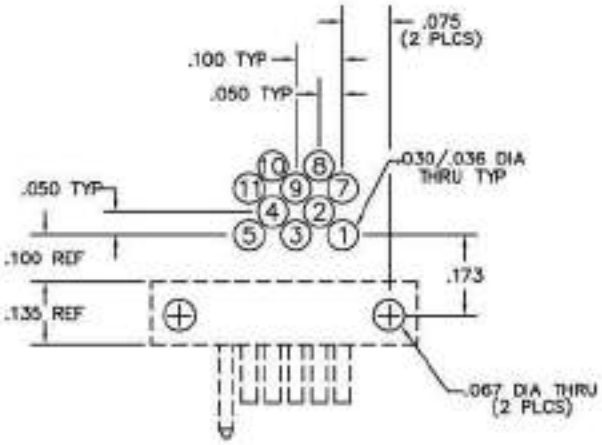

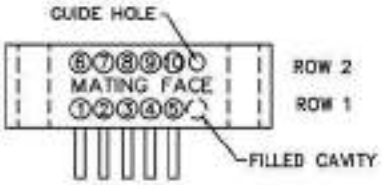

PLUG
MA-251-010-325-A6600

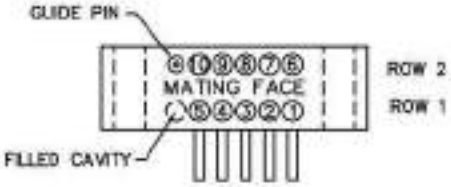

RECEPTACLE
MA-261-010-435-A6300

Crimped wire connectors, straight with mounting holes Guide hole/pin, last cavity
(10 electrical positions, 2 mechanical positions)

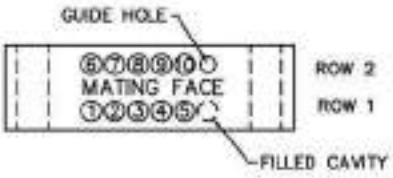

PLUG
MA-211-010-161-A66WA

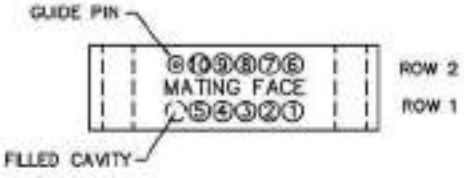

RECEPTACLE
MA-221-010-261-A63WA

WIRE CONNECT CHART

1	BLK	6	GRN
2	BRN	7	BLU
3	RED	8	VIO
4	ORN	9	GRY
5	YEL	10	WHT

AirBorn

Cable to Cable

.050"

9 thru 100 Contacts

Rugged Metal

MM

Rugged Plastic

MN

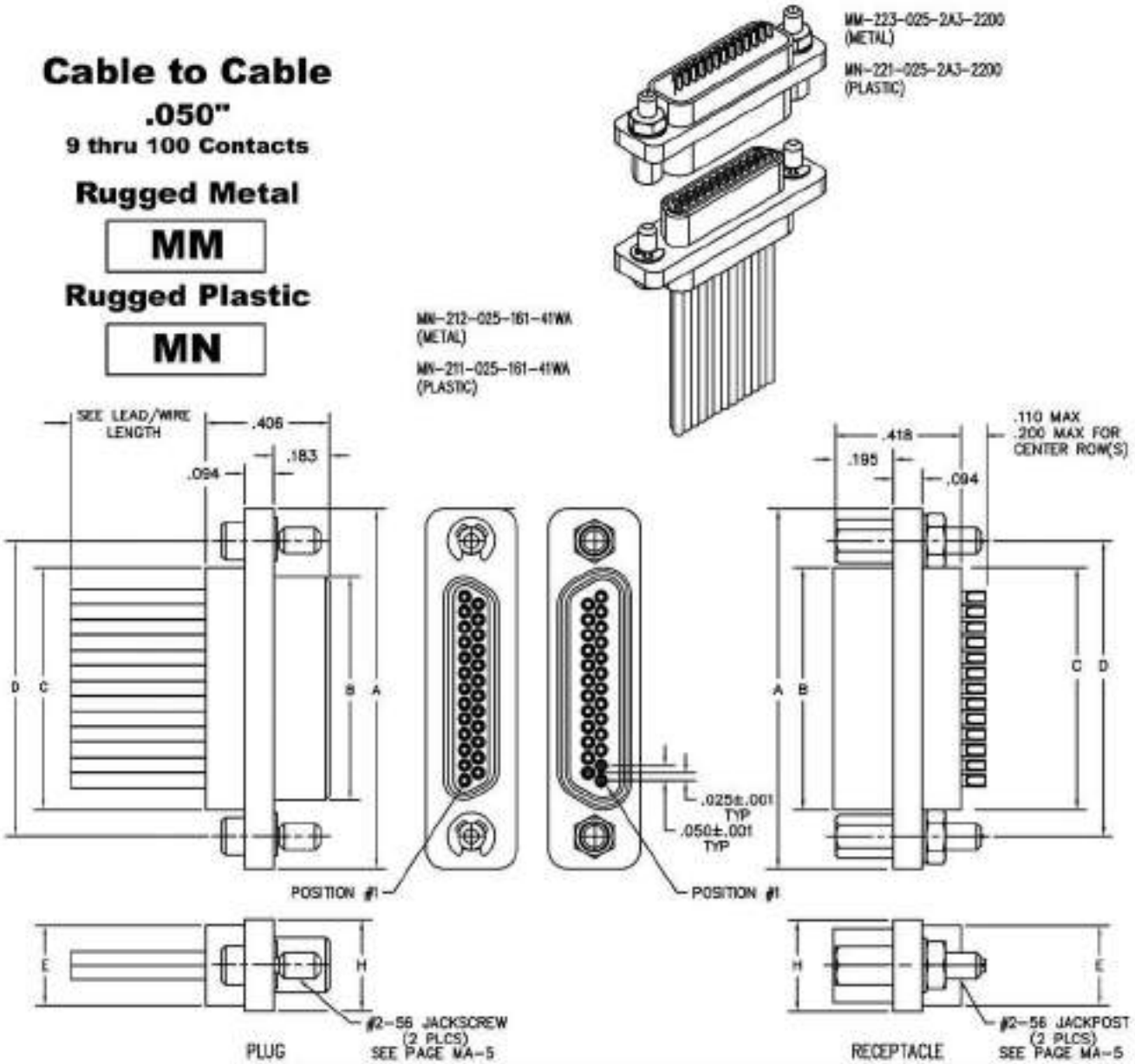

DIMENSIONS									
SIZE	CONTACT ROWS	A	B PLUG MAX	B RCPT MAX	C	D	E POTTING WELL MAX	H	HARDWARE
9	2	.775	.334	.400	.390	.565	.270	.298	#2-56 UNC THD (.092 DIA THRU)
15		.925	.484	.550	.540	.715			
21		1.075	.634	.700	.690	.865			
25		1.175	.734	.800	.790	.965			
31		1.325	.884	.950	.940	1.115			
37		1.475	1.034	1.100	1.090	1.265			
51**		1.825	1.384	1.450	1.440	1.615			
51	3	1.425	.984	1.050	1.040	1.215	.310	.341	
69		1.725	1.284	1.350	1.340	1.515			
100	4	2.160	1.384	1.508	1.432	1.600	.360	.384	#4-40 UNC THD (.147 DIA THRU)

* = 69 POSITION CONNECTORS ARE AVAILABLE IN METAL ONLY.
** = 2 ROW, 51 POSITION CONNECTORS ARE AVAILABLE IN METAL ONLY, (NON MIL-SPEC INTERFACE).

AirBorn

PLUG: MM-212-031-161-41WA
RECEPTACLE: MM-222-031-2G3-4500
PLUG: MN-211-031-161-41WA
RECEPTACLE: MN-221-031-2G3-4500

XX-XXX-XXX-XXX-XXXX-XXX

PLUG	RECEPTACLE
SERIES	
MM .050" Rugged Metal I/O Connector MN .050" Rugged Plastic I/O Connector (MM & MN mate with MK, ML, MM, MN receptacles)	MM .050" Rugged Metal I/O Connector MN .050" Rugged Plastic I/O Connector (MM & MN mate with MK, ML, MM, MN plugs)
BODY	
2 2-Row (Sizes 9 thru 51****) 3 3-Row (Size 51 & 69***) 4 4-Row (Size 100)	2 2-Row (Sizes 9 thru 51****) 3 3-Row (Size 51 & 69***) 4 4-Row (Size 100)
BODY STYLE: 1 Plug, straight, with ears	BODY STYLE: 2 Receptacle, straight, with ears
BODY MATERIAL: 1 Polyphenylene Sulfide (MN only) 2 Polyphenylene Sulfide with electroless nickel shell 3 Polyphenylene Sulfide with electrodeposited cadmium shell ☒ 4 Polyphenylene Sulfide with hard anodized black shell 5 Polyphenylene Sulfide with stainless steel shell A Pure Electro-Deposited Aluminum K Zinc Nickel Plating T Nickel Polymer Plating	BODY MATERIAL: 1 Polyphenylene Sulfide (MN only) 2 Polyphenylene Sulfide with electroless nickel shell 3 Polyphenylene Sulfide with electrodeposited cadmium shell ☒ 4 Polyphenylene Sulfide with hard anodized black shell 5 Polyphenylene Sulfide with stainless steel shell A Pure Electro-Deposited Aluminum K Zinc Nickel Plating T Nickel Polymer Plating
SIZE	
XXX 009, 015, 021, 025, 031, 037, 051****, 069***, 100	XXX 009, 015, 021, 025, 031, 037, 051****, 069***, 100
CONTACTS	
TYPE CONTACTS/TERMINATIONS: 11 Pin, straight, 26 avg solder cup 1A Pin, straight, 24 avg solder cup 1D Pin, straight, .109" Lead Length (.018 dia) 1E Pin, straight, .125" Lead Length (.018 dia) 1F Pin, straight, .140" Lead Length (.018 dia) 1G Pin, straight, .156" Lead Length (.018 dia) 1H Pin, straight, .172" Lead Length (.018 dia) 1J Pin, straight, .187" Lead Length (.018 dia) 13 Pin, straight, .250" Lead Length (.018 dia) 1K Pin, straight, .375" Lead Length (.018 dia) 14 Pin, straight, .500" Lead Length (.018 dia) 15 Pin, straight, 1.000" Lead Length (.018 dia) 16 Pin, straight, crimped wire	TYPE CONTACTS/TERMINATIONS: 21 Socket, straight, 26 avg solder cup 2A Socket, straight, 24 avg solder cup 2D Socket, straight, .109" Lead Length (.018 dia) 2E Socket, straight, .125" Lead Length (.018 dia) 2F Socket, straight, .140" Lead Length (.018 dia) 2G Socket, straight, .156" Lead Length (.018 dia) 2H Socket, straight, .172" Lead Length (.018 dia) 2J Socket, straight, .187" Lead Length (.018 dia) 23 Socket, straight, .250" Lead Length (.018 dia) 2K Socket, straight, .375" Lead Length (.018 dia) 2L Socket, straight, .500" Lead Length (.018 dia) 2M Socket, straight, 1.000" Lead Length (.018 dia) 26 Socket, straight, crimped wire
PLATING OPTIONS: 1 50 µ" Au contacts (crimp wire) 3 50 µ" Au contacts (solder cup, pigtail) 5 50 µ" Au contacts; Sn/Pb alloy terminations ☒ 7 50 µ" Au contacts; SAC305 terminations	PLATING OPTIONS: 1 50 µ" Au contacts (crimp wire) 3 50 µ" Au contacts (solder cup, pigtail) 5 50 µ" Au contacts; Sn/Pb alloy terminations ☒ 7 50 µ" Au contacts; SAC305 terminations
HARDWARE	
STYLE OF HARDWARE: 00 None 22 Two fixed jacknut assemblies (62*) 41 Two turning jackscrews, allen head, retaining ring (81*) 42 Two long turning jackscrews, allen head, retaining ring (82*) 43 Two turning jackscrews, slot head, retaining ring (83*) 44 Two long turning jackscrews, slot head, retaining ring (84*) 45 Two turning jackscrews, allen head, captivated** (85*) ***** 99 Keying hardware, see options below (Body material 2, 3 and 4 only)	STYLE OF HARDWARE: 00 None 22 Two fixed jacknut assemblies (62*) 41 Two turning jackscrews, allen head, retaining ring (81*) 42 Two long turning jackscrews, allen head, retaining ring (82*) 43 Two turning jackscrews, slot head, retaining ring (83*) 44 Two long turning jackscrews, slot head, retaining ring (84*) 45 Two turning jackscrews, allen head, captivated** (85*) ***** 99 Keying hardware, see options below (Body material 2, 3 and 4 only)
POLARIZATION / WIRING: 00 None XX For wiring codes, see page MA-3 & MA-4	POLARIZATION / WIRING: 00 None XX For wiring codes, see page MA-3 & MA-4
OPTIONS	
KSXX Two turning jackscrews. See page MA-6 for keying options (KJ*) KPXX Two fixed jacknuts. See page MA-6 for keying options (KN*)	KSXX Two turning jackscrews and interfacial sealing gasket. See page MA-6 for keying options (KJ*) KPXX Two fixed jacknuts and interfacial sealing gasket. See page MA-6 for keying options (KN*) 900 Interfacial sealing gasket

* = Use numbers or letters in parenthesis when ordering size 100.
** = Captive hardware is factory installed and non-removable.
*** = 69 position connectors are available in metal only.
**** = 2 row, 51 position connectors are available in metal only (non MIl-Spec interface).
***** = Not a valid combination for MN series.
☒ = Option not RoHS compliant

AirBorn

Cable to Cable Grounding Fingers

.050"

9 thru 100 Contacts

Rugged Metal

MM

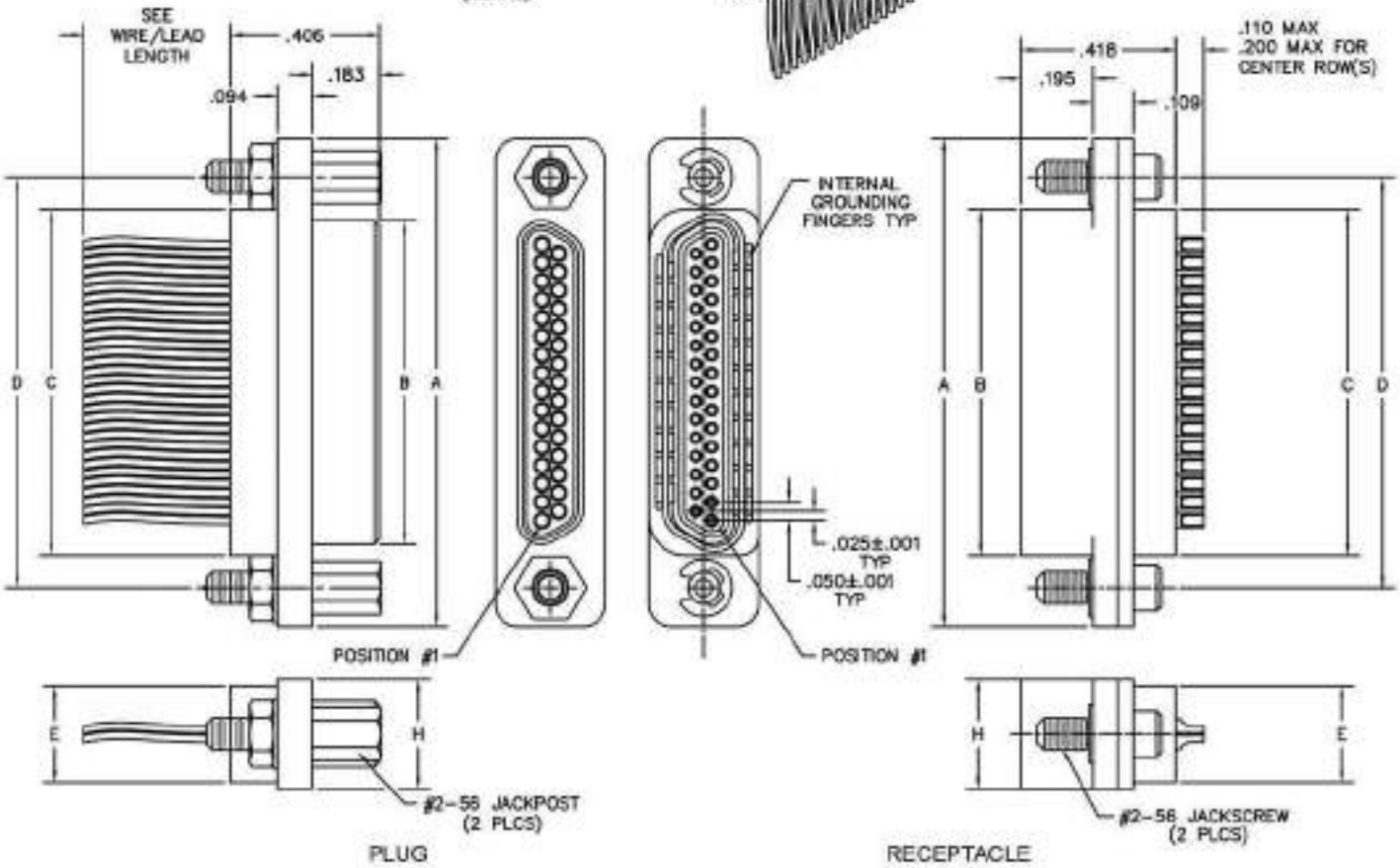

DIMENSIONS									
SIZE	CONTACT ROWS	A	B		C	D	E	H	HARDWARE
			PLUG MAX	RCPT MAX			POTTING WELL MAX		
9	2	.775	.334	.400	.390	.565	.270	.298	#2-56 UNC THD (.092 DIA THRU)
15		.925	.484	.550	.540	.715			
21		1.075	.634	.700	.690	.865			
25		1.175	.734	.800	.790	.965			
31		1.325	.884	.950	.940	1.115			
37		1.475	1.034	1.100	1.090	1.265			
51	3	1.425	.984	1.050	1.040	1.215	.310	.341	
69		1.725	1.284	1.350	1.340	1.515			
100	4	2.160	1.384	1.508	1.432	1.800	.360	.384	#4-40 UNC THD (.147 DIA THRU)

AirBorn

PLUG: MM–212–031–161–22WQ
RECEPTACLE: MM–2D2–031–261–41WA

XX–XXX–XXX–XXX–XXXX–XXX

PLUG	RECEPTACLE
SERIES	
MM .050" Rugged Metal I/O Connector (MM mates with MK, ML, MM, MN receptacles)	MM .050" Rugged Metal I/O Connector (MM mates with MK, ML, MM, MN plugs)
BODY	
2 2-Row (Sizes 9 thru 37)	2 2-Row (Sizes 9 thru 37)
3 3-Row (Size 51 & 69)	3 3-Row (Size 51 & 69)
4 4-Row (Size 100)	4 4-Row (Size 100)
BODY STYLE:	BODY STYLE:
1 Plug, straight, with ears	D Receptacle, straight, with grounding fingers
BODY MATERIAL:	BODY MATERIAL:
2 Polyphenylene Sulfide with electroless nickel shell	2 Polyphenylene Sulfide with electroless nickel shell
3 Polyphenylene Sulfide with electrodeposited cadmium shell ☒	3 Polyphenylene Sulfide with electrodeposited cadmium shell ☒
6 Polyphenylene Sulfide with gold plated shell	6 Polyphenylene Sulfide with gold plated shell
SIZE	
XXX 009, 015, 021, 025, 031, 037, 051, 069, 100	XXX 009, 015, 021, 025, 031, 037, 051, 069, 100
CONTACTS	
TYPE CONTACTS/TERMINATIONS:	TYPE CONTACTS/TERMINATIONS:
11 Pin, straight, solder cup	21 Socket, straight, solder cup
1A Pin, straight, 24 awg solder cup	2A Socket, straight, 24 awg solder cup
1D Pin, straight, .109" Lead Length (.018 dia) SEE NOTE 1	2D Socket, straight, .109" Lead Length (.018 dia)
1E Pin, straight, .125" Lead Length (.018 dia) SEE NOTE 1	2E Socket, straight, .125" Lead Length (.018 dia)
1F Pin, straight, .140" Lead Length (.018 dia) SEE NOTE 1	2F Socket, straight, .140" Lead Length (.018 dia)
12 Pin, straight, .150" Lead Length (.018 dia) SEE NOTE 1	22 Socket, straight, .150" Lead Length (.018 dia)
1G Pin, straight, .156" Lead Length (.018 dia) SEE NOTE 1	2G Socket, straight, .156" Lead Length (.018 dia)
1H Pin, straight, .172" Lead Length (.018 dia) SEE NOTE 1	2H Socket, straight, .172" Lead Length (.018 dia)
1J Pin, straight, .187" Lead Length (.018 dia) SEE NOTE 1	2J Socket, straight, .187" Lead Length (.018 dia)
13 Pin, straight, .250" Lead Length (.018 dia) SEE NOTE 1	23 Socket, straight, .250" Lead Length (.018 dia)
1K Pin, straight, .375" Lead Length (.018 dia) SEE NOTE 1	2K Socket, straight, .375" Lead Length (.018 dia)
14 Pin, straight, .500" pigtails (.018 dia) SEE NOTE 1	2L Socket, straight, .500" Lead Length (.018 dia)
15 Pin, straight, 1.000" pigtails (.018 dia) SEE NOTE 1	2M Socket, straight, 1.000" Lead Length (.018 dia)
16 Pin, straight, crimped wire	24 Socket, straight, .500" pigtails (.018 dia) SEE NOTE 1
	25 Socket, straight, 1.000" pigtails (.018 dia) SEE NOTE 1
	26 Socket, straight, crimped wire
PLATING OPTIONS:	PLATING OPTIONS:
1 50 µ" Au contacts (crimp wire)	1 50 µ" Au contacts (crimp wire)
3 50 µ" Au contacts (solder cup, pigtail)	3 50 µ" Au contacts (solder cup, pigtail)
5 50 µ" Au contacts; Sn/Pb alloy terminations (pigtail) ☒	5 50 µ" Au contacts; Sn/Pb alloy terminations (pigtail) ☒
7 50 µ" Au contacts; SAC305 terminations (pigtail)	7 50 µ" Au contacts; SAC305 terminations (pigtail)
HARDWARE	
STYLE OF HARDWARE:	STYLE OF HARDWARE:
00 None	00 None
22 Two fixed jacknut assemblies (62*)	22 Two fixed captive jacknut assemblies** (62*)
41 Two turning jackscrews, allen head, retaining ring (81*)	41 Two turning jackscrews, allen head, retaining ring (81*)
42 Two long turning jackscrews, allen head, retaining ring (82*)	42 Two long turning jackscrews, allen head, retaining ring (82*)
43 Two turning jackscrews, slot head, retaining ring (83*)	43 Two turning jackscrews, slot head, retaining ring (83*)
44 Two long turning jackscrews, slot head, retaining ring (84*)	44 Two long turning jackscrews, slot head, retaining ring (84*)
45 Two turning jackscrews, allen head, captivated** (85*)	45 Two turning jackscrews, allen head, captivated** (85*)
99 Keying hardware, see options below. (Body material 2 and 3 only)	99 Keying hardware, see options below. (Body material 2 and 3 only)
POLARIZATION / WIRING:	POLARIZATION / WIRING:
00 None	00 None
XX For wiring codes, see page MA-3 & MA-4	XX For wiring codes, see page MA-3 & MA-4
OPTIONS	
KSXX Two turning jackscrews. See page MA-6 for keying options (KJ*)	KSXX Two turning jackscrews and interfacial sealing gasket. See page MA-6 for keying options (KJ*)
KPXX Two fixed jacknuts. See page MA-6 for keying options (KN*)	KPXX Two fixed jacknuts and interfacial sealing gasket. See page MA-6 for keying options (KN*)
	900 Interfacial sealing gasket

* = Use numbers or letters in parenthesis when ordering size 100.
** = Captive hardware is factory installed and non-removable.

NOTE 1 = The leads on these contacts are soft copper suitable for forming.

☒ = Option not RoHS compliant

AirBorn

Rugged Metal I/O (Integral Shield Termination)

.050"

9 thru 100 Contacts

MM

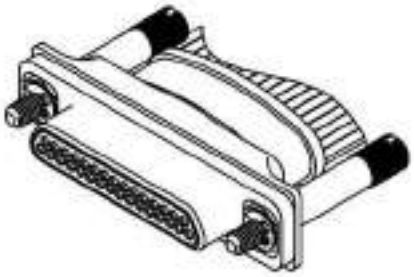

MM-2P2-031-161-44WA
(PLUG)

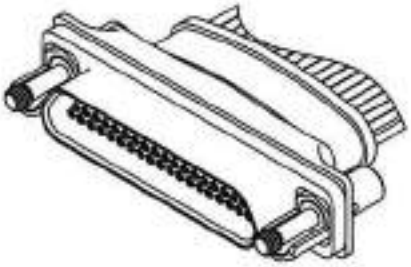

MM-2Q2-031-261-99WA-K511
(RECEPTACLE)

MATING MATRIX	
CONNECTOR	MATES WITH
MM-2P...	MK, ML, MM, MN receptacles
MM-2Q...	MK, ML, MM, MN plugs

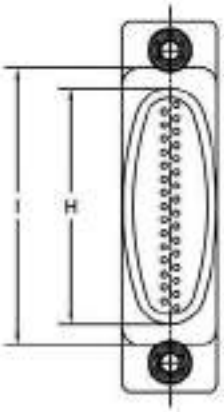

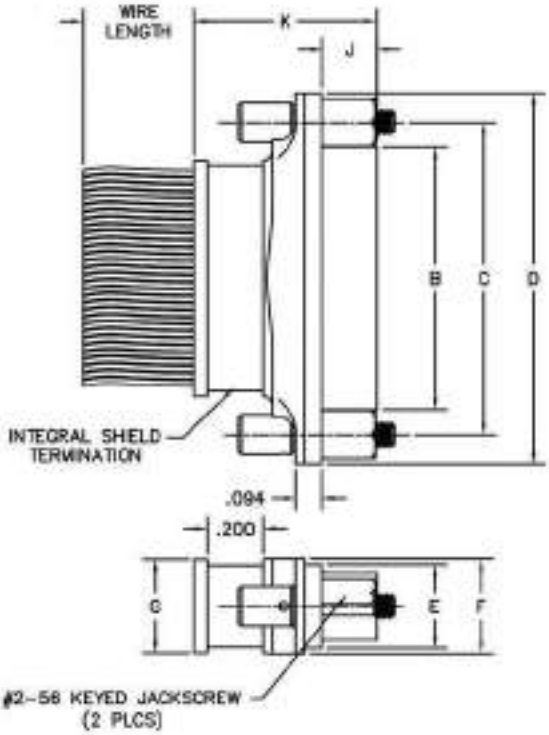

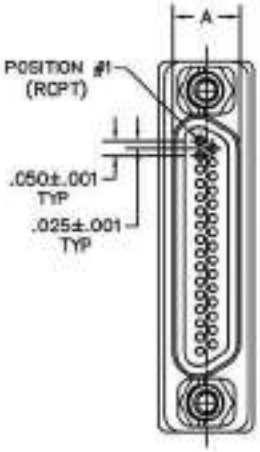

DIMENSIONS																	
SIZE	CONTACT ROWS	A		B		C	HARDWARE	D	E	F	G	H	I	J		K	
		PLUG MAX	RCPT MAX	PLUG MAX	RCPT MAX									PLUG	RCPT	PLUG	RCPT
9	2	.185	.251	.334	.400	.565	#2-56 UNC THD (.092 DIA THRU)	.775	.298	.340	.290	.290	.440	.183	.195	.640	.652
15				.484	.550	.715		.925			.335	.445	.590				
21				.634	.700	.865		1.075				.595	.740				
25				.734	.800	.965		1.175				.695	840				
31				.884	.950	1.115		1.325				.845	.990				
37				1.034	1.100	1.265		1.475				.995	1.140				
51				1.384	1.450	1.615		1.825				1.345	1.490				
51	3	.228	.294	.984	1.050	1.215		1.425	.341	.380	.367	.945	1.090				
69				1.284	1.350	1.515		1.725				1.245	1.390				
100	4	.271	.394	1.384	1.508	1.800	#4-40 UNC THD (.147 DIA THRU)	2.160	.381	.430	.417	1.457	1.522				

AirBorn

PLUG: MM-2P2-031-161-44WA
RECEPTACLE: MM-2Q2-031-261-99WA-KS11
XX-XXX-XXX-XXX-XXXX
SERIES | BODY | SIZE | CONTACTS | HARDWARE & WIRING

PLUG

SERIES
MM .050" Rugged Metal I/O Connector

BODY
2 2-Row (Sizes 9 thru 37, 51)***
3 3-Row (Sizes 51 thru 69)
4 4-Row (Size 100)

BODY STYLE:
P Plug, straight, with ears and integral shield termination

BODY MATERIAL:
2 Polyphenylene Sulfide with electroless nickel shell
3 Polyphenylene Sulfide with electrodeposited cadmium shell ☒

SIZE
XXX 009, 015, 021, 025, 031, 037, 051, 069, 100

CONTACTS
CONTACTS/PLATING/TERMINATIONS:
161 Pin, straight, 50 µ" Au contacts (crimped stranded wire)

HARDWARE & WIRING
STYLE OF HARDWARE:
00 None
22 Two fixed jacknut assemblies (62)**
41 Two turning jackscrews, allen head, retaining ring (81)**
42 Two long turning jackscrews, allen head, retaining ring (82)**
43 Two turning jackscrews, slot head, retaining ring (83)**
44 Two long turning jackscrews, slot head, retaining ring (84)**
45 Two turning jackscrews, allenhead,captivated* (85)**
99 Keying hardware, see options below

WIRING:
XX For wiring codes, see page MA-3 & MA-4

OPTIONS
KSXX Two turning jackscrews
See page MA-6 for keying options (KJ)**
KPXX Two fixed jacknuts
See page MA-6 for keying options (KN)**

NOTES
See page MA-5 & MA-7 for hardware dimensions.
Reference PTB44 for band-it termination installation

RECEPTACLE

SERIES
MM .050" Rugged Metal I/O Connector

BODY
2 2-Row (Sizes 9 thru 37, 51)***
3 3-Row (Sizes 51 thru 69)
4 4-Row (Size 100)

BODY STYLE:
Q Receptacle, straight, with ears and integral shield termination

BODY MATERIAL:
2 Polyphenylene Sulfide with electroless nickel shell
3 Polyphenylene Sulfide with electrodeposited cadmium shell ☒

SIZE
XXX 009, 015, 021, 025, 031, 037, 051, 069, 100

CONTACTS
CONTACTS/PLATING/TERMINATIONS:
261 Socket, straight, 50 µ" Au contacts (crimped stranded wire)

HARDWARE & WIRING
STYLE OF HARDWARE:
00 None
22 Two fixed jacknut assemblies (62)**
41 Two turning jackscrews, allen head, retaining ring (81)**
42 Two long turning jackscrews, allen head, retaining ring (82)**
43 Two turning jackscrews, slot head, retaining ring (83)**
44 Two long turning jackscrews, slot head, retaining ring (84)**
45 Two turning jackscrews, allenhead,captivated* (85)**
99 Keying hardware, see options below

WIRING:
XX For wiring codes, see page MA-3 & MA-4

OPTIONS
900 Interfacial seal
KSXX Two turning jackscrews & interfacial sealing gasket
See page MA-6 for keying options (KJ)**
KPXX Two fixed jacknuts & interfacial sealing gasket
See page MA-6 for keying options (KN)**

NOTES
See page MA-5 & MA-7 for hardware dimensions.
Reference PTB44 for band-it termination installation

Stainless steel micro band for shield termination, shipped with each connector
AirBorn part number CDG10026 1/8" short, CDG17492 1/8" long
Band-it application tool - AirBorn part number CDG10027

* = Captive hardware is factory installed and non-removable.
** = Use numbers or letters in parenthesis when ordering size 100.
*** = 2 Row, 51 position connectors are NON MIL-SPEC interface
☒ = Option not RoHS compliant

AirBorn

Rugged Metal Solder Cup (Integral Shield Termination)

.050"

9 thru 100 Contacts

MM

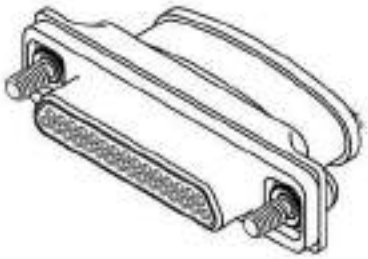

MM-2P2-031-113-4500
(PLUG)

MM-2Q2-031-213-KS44
(RECEPTACLE)

MATING MATRIX	
CONNECTOR	MATES WITH
MM-2P...	MK, ML, MM, MN receptacles
MM-2Q...	MK, ML, MM, MN plugs

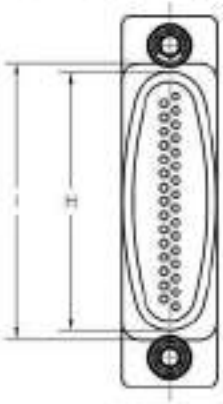

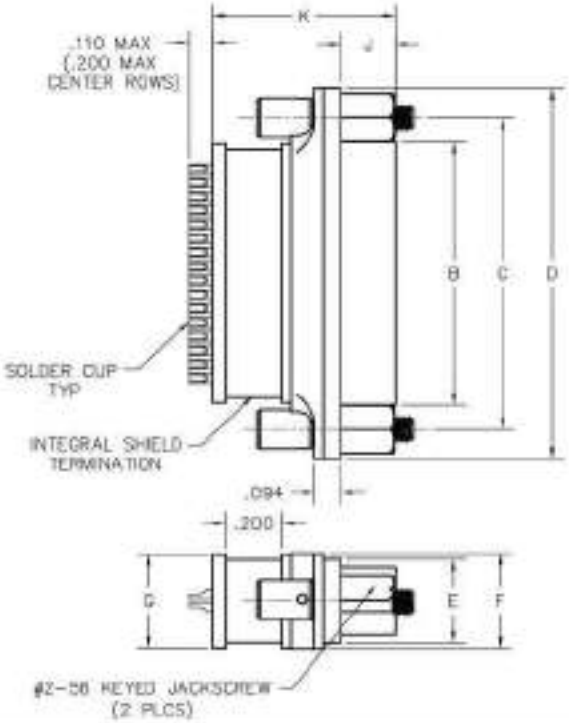

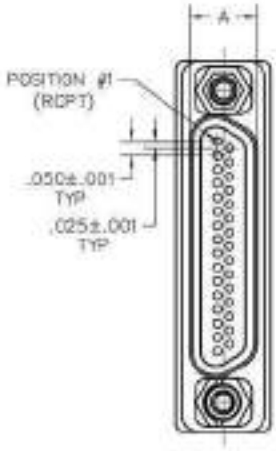

DIMENSIONS																	
SIZE	CONTACT ROWS	A		B		C	HARDWARE	D	E	F	G	H	I	J		K	
		PLUG MAX	RCPT MAX	PLUG MAX	RCPT MAX									PLUG	RCPT	PLUG	RCPT
9	2	.185	.251	.334	.400	.565	#2-56 UNC THD (.092 DIA THRU)	.775	.298	.340	.335	.375	.440	.183	.195	.640	.652
15				.484	.550	.715		.925				.525	.590				
21				.634	.700	.865		1.075				.675	.740				
25				.734	.800	.965		1.175				.775	.840				
31				.884	.950	1.115		1.325				.925	.990				
37				1.034	1.100	1.265		1.475				1.075	1.140				
51				1.384	1.450	1.615		1.825				1.425	1.490				
51	3	.228	.294	.984	1.050	1.215		1.425	.341	.380	.367	1.025	1.090				
69				1.284	1.350	1.515		1.725				1.325	1.390				
100	4	.271	.394	1.384	1.508	1.800	#4-40 UNC THD (.147 DIA THRU)	2.160	.381	.430	.417	1.457	1.522				

AirBorn

PLUG: MM-2P2-031-113-4500
RECEPTACLE: MM-2Q2-031-213-2200
XX-XXX-XXX-XXX-XXXX
SERIES | BODY | SIZE | CONTACTS | HARDWARE & WIRING

PLUG

SERIES
MM .050" Rugged Metal Solder Cup Connector

BODY
2 2-Row (Sizes 9 thru 37, 51)***
3 3-Row (Sizes 51 thru 69)
4 4-Row (Size 100)

BODY STYLE:
P Plug, straight, with ears and integral shield termination

BODY MATERIAL:
2 Polyphenylene Sulfide with electroless nickel shell
3 Polyphenylene Sulfide with electrodeposited cadmium shell ☒

SIZE
XXX 009, 015, 021, 025, 031, 037, 051, 069, 100

CONTACTS
CONTACTS/PLATING/TERMINATIONS:
113 Pin, straight, 50 µ" Au contacts, 10 µ" Au termination 26 AWG solder cup

HARDWARE & WIRING
STYLE OF HARDWARE:
00 None
22 Two fixed jacknut assemblies (62)**
41 Two turning jackscrews, allen head, retaining ring (81)**
43 Two turning jackscrews, slot head, retaining ring (83)**
45 Two turning jackscrews, allenhead,captivated* (85)**
99 Keying hardware, see options below

WIRING:
00 None

OPTIONS
KPXX Two fixed jacknuts
See page MA-6 for keying options (KN)**
KSXX Two turning jackcrews.
See page MA-6 for keying options (KP)**

NOTES
See page MA-5 & MA-7 for hardware dimensions.
Reference PTB43 for solder cup termination
Reference PTB44 for band-it termination installation

RECEPTACLE

SERIES
MM .050" Rugged Metal Solder Cup Connector

BODY
2 2-Row (Sizes 9 thru 37, 51)***
3 3-Row (Sizes 51 thru 69)
4 4-Row (Size 100)

BODY STYLE:
Q Receptacle, straight, with ears and integral shield termination

BODY MATERIAL:
2 Polyphenylene Sulfide with electroless nickel shell
3 Polyphenylene Sulfide with electrodeposited cadmium shell ☒

SIZE
XXX 009, 015, 021, 025, 031, 037, 051, 069, 100

CONTACTS
CONTACTS/PLATING/TERMINATIONS:
213 Socket, straight, 50 µ" Au contacts, 10 µ" Au termination 26 AWG solder cup

HARDWARE & WIRING
STYLE OF HARDWARE:
00 None
22 Two fixed jacknut assemblies (62)**
41 Two turning jackscrews, allen head, retaining ring (81)**
43 Two turning jackscrews, slot head, retaining ring (83)**
45 Two turning jackscrews, allenhead,captivated* (85)**
99 Keying hardware, see options below

WIRING:
00 None

OPTIONS
900 Interfacial seal
KPXX Two fixed jacknuts & interfacial sealing gasket
See page MA-6 for keying options (KN)**
KSXX Two turning jackscrews & interfacial sealing gasket
See page MA-6 for keying options (KJ)**

NOTES
See page MA-5 & MA-7 for hardware dimensions.
Reference PTB43 for solder cup termination
Reference PTB44 for band-it termination installation

Stainless steel micro band for shield termination, shipped with each connector
AirBorn part number CDG10026 1/8" short, CDG17492 1/8" long
Band-it application tool - AirBorn part number CDG10027

* = Captive hardware is factory installed and non-removable.
** = Use numbers or letters in parenthesis when ordering size 100.
*** = 2 Row, 51 position connectors are NON MIL-SPEC interface
☒ = Option not RoHS compliant

AirBorn

Cable to Cable (Jumper Assembly)

.050"

9 thru 100 Contacts

Rugged Metal

MM

Rugged Plastic

MN

MM-2J2-031-PS1-22NA (METAL)

MN-2J1-031-PS1-22NA (PLASTIC)

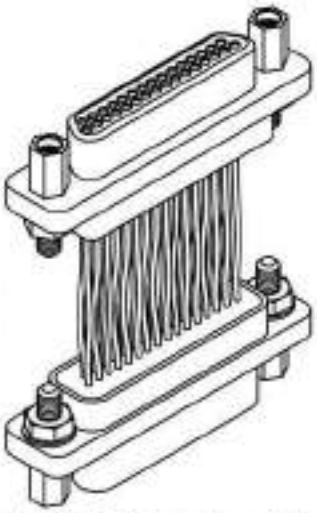

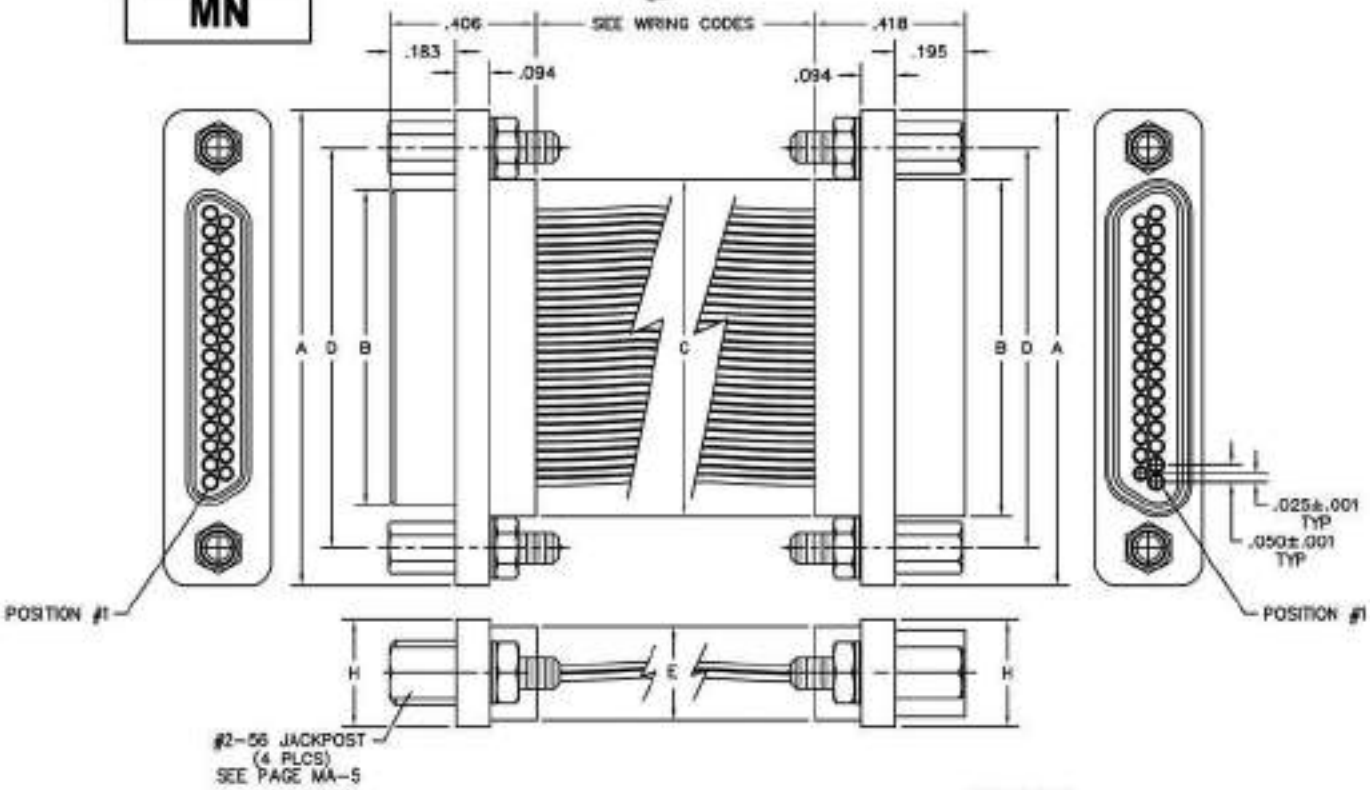

PLUG

RECEPTACLE

DIMENSIONS									
SIZE	CONTACT ROWS	A	B PLUG MAX	B RCPT MAX	C	D	E POTTING WELL MAX	H	HARDWARE
9	2	.775	.334	.400	.390	.565	.270	.298	#2-56 UNC THD (.092 DIA THRU)
15		.925	.484	.550	.540	.715			
21		1.075	.634	.700	.690	.865			
25		1.175	.734	.800	.790	.965			
31		1.325	.884	.950	.940	1.115			
37		1.475	1.034	1.100	1.090	1.265			
51**		1.825	1.384	1.450	1.440	1.615			
51	3	1.425	.984	1.050	1.040	1.215	.310	.341	
69*		1.725	1.284	1.350	1.340	1.515			
100	4	2.160	1.384	1.508	1.432	1.800	.360	.384	#4-40 UNC THD (.147 DIA THRU)

* = 69 POSITION CONNECTORS ARE AVAILABLE IN METAL ONLY.
** = 2 ROW, 51 POSITION CONNECTORS ARE AVAILABLE IN METAL ONLY. (NON MIL-SPEC INTERFACE).

MATING FACE ORIENTATION

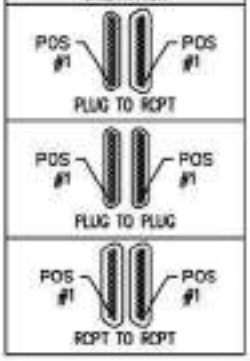

AirBorn

MM–2J2–031–PS1–22WA
MN–2J1–031–PS1–22WA
XX–XXX–XXX–XXX–XXXX–XXX

SERIES

MM .050" Rugged Metal I/O Connector
MN .050" Rugged Plastic I/O Connector
(MM & MN mate with MK, ML, MM, MN assemblies)

BODY

2 2-Row (Sizes 9 thru 51****)
3 3-Row (Size 51 & 69***)
4 4-Row (Size 100)

BODY STYLE:
J Jumper assembly, straight, with ears

BODY MATERIAL:
1 Polyphenylene Sulfide (MN only)
2 Polyphenylene Sulfide with electroless nickel shell
3 Polyphenylene Sulfide with electrodeposited cadmium shell ☒
4 Polyphenylene Sulfide with hard anodized black shell
5 Polyphenylene Sulfide with stainless steel shell
A Pure Electro-Deposited Aluminum
K Zinc Nickel Plating
T Nickel Polymer Plating

SIZE

XXX 009, 015, 021, 025, 031, 037, 051****,069***, 100

CONTACTS

TYPE CONTACTS/TERMINATIONS:
PP Plug to plug
PS Plug to receptacle
SS Receptacle to receptacle

PLATING OPTIONS:
1 50 µ" Au contacts (crimp wire)

HARDWARE

STYLE OF HARDWARE:
00 None
22 Four fixed jacknut assemblies (62*)
41 Four turning jackscrews, allen head, retaining ring (81*)
43 Four turning jackscrews, slot head, retaining ring (83*)
45 Four turning jackscrews, allen head, captivated** (85*) *****
46 Two fixed jacknuts and two turning jackscrews, allen head, uninstalled (86*)
47 Two fixed jacknuts and two turning jackscrews, slot head, uninstalled (87*)
99 Keying hardware, see options below. (Body material 2, 3 and 4 only)

POLARIZATION / WIRING:
XX For wiring codes, see page MA-3 & MA-4

OPTIONS

KSXX Four turning jackscrews. Receptacles supplied with interfacial sealing gasket. See page MA-6 for keying options (KJ*)
KPXX Four fixed jacknuts. Receptacles supplied with interfacial sealing gasket. See page MA-6 for keying options (KN*)
900 Interfacial sealing gasket

* = Use numbers or letters in parenthesis when ordering size 100.
** = Captive hardware is factory installed and non-removable.
*** = 69 position connectors are available in metal only.
**** = 2 row, 51 position connectors are available in metal only (non Mil-Spec interface).
***** = Not a valid combination for MN series.
☒ = Option not RoHS compliant

AirBorn

Cable to Cable

.050"

9 thru 51 Contacts

Low Profile Metal

MQ

Low Profile Plastic

MP

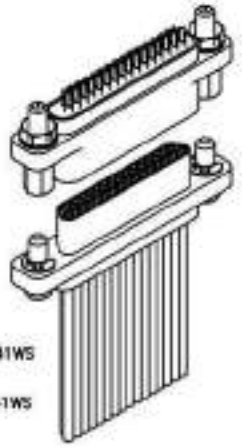

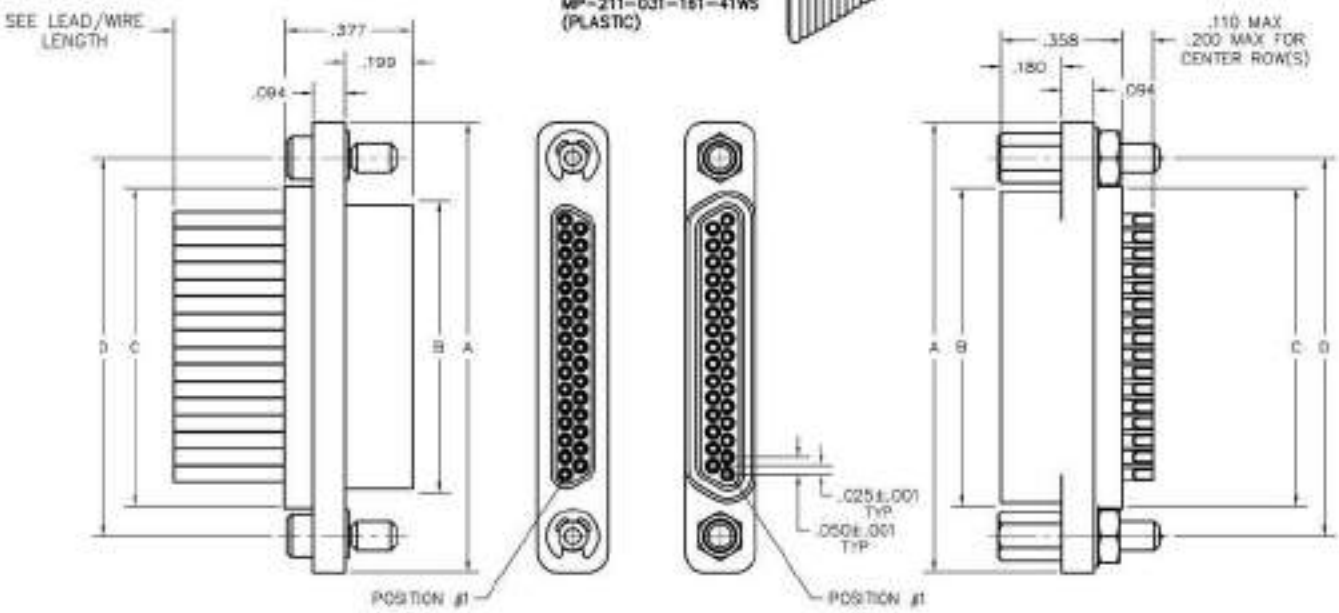

DIMENSIONS									
SIZE	CONTACT ROWS	A	B		C	D	E	H	HARDWARE
			PLUG MAX	RCPT MAX			POTTING WELL MAX		
9	2	.778	.292	.378	.398	.565	.173	.208	#2-56 UNC THD (.092 DIA THRU)
15		.928	.442	.528	.548	.715			
21		1.078	.592	.678	.698	.865			
25		1.178	.692	.778	.798	.965			
31		1.328	.842	.928	.948	1.115			
37		1.478	.992	1.078	1.098	1.265			
51	3	1.428	.942	1.028	1.048	1.215	.220	.250	

AirBorn

PLUG: MQ–212–031–161–41WS
RECEPTACLE: MQ–222–031–2G3–4500
PLUG: MP–211–031–161–41WS
RECEPTACLE: MP–221–031–2G3–4500

XX–XXX–XXX–XXX–XXXX–XXX

PLUG	RECEPTACLE
SERIES	
MQ .050" Low Profile Metal I/O Connector MP .050" Low Profile Plastic I/O Connector (MQ & MP mate with MP, MQ, MR, MS receptacles)	MQ .050" Low Profile Metal I/O Connector MP .050" Low Profile Plastic I/O Connector (MQ & MP mate with MP, MQ, MR, MS plugs)
BODY	
2 2-Row (Sizes 9 thru 37) 3 3-Row (Size 51)	2 2-Row (Sizes 9 thru 37) 3 3-Row (Size 51)
BODY STYLE: 1 Plug, straight, with ears	BODY STYLE: 2 Receptacle, straight, with ears
BODY MATERIAL: 1 Polyphenylene Sulfide (MP only) 2 Polyphenylene Sulfide with electroless nickel shell 3 Polyphenylene Sulfide with electrodeposited cadmium shell ☒ 4 Polyphenylene Sulfide with hard anodized black shell A Pure Electro-Deposited Aluminum K Zinc Nickel Plating T Nickel Polymer Plating	BODY MATERIAL: 1 Polyphenylene Sulfide (MP only) 2 Polyphenylene Sulfide with electroless nickel shell 3 Polyphenylene Sulfide with electrodeposited cadmium shell ☒ 4 Polyphenylene Sulfide with hard anodized black shell A Pure Electro-Deposited Aluminum K Zinc Nickel Plating T Nickel Polymer Plating
SIZE	
XXX 009, 015, 021, 025, 031, 037, 051	XXX 009, 015, 021, 025, 031, 037, 051
CONTACTS	
TYPE CONTACTS/TERMINATIONS: 11 Pin, straight, 26 awg solder cup 1A Pin, straight, 24 awg solder cup 1D Pin, straight, .109" Lead Length (.018 dia) see note 1 1E Pin, straight, .125" Lead Length (.018 dia) see note 1 1F Pin, straight, .140" Lead Length (.018 dia) see note 1 12 Pin, straight, .150" Lead Length (.018 dia) see note 1 1G Pin, straight, .156" Lead Length (.018 dia) see note 1 1H Pin, straight, .172" Lead Length (.018 dia) see note 1 1J Pin, straight, .187" Lead Length (.018 dia) see note 1 13 Pin, straight, .250" Lead Length (.018 dia) see note 1 1K Pin, straight, .375" Lead Length (.018 dia) see note 1 14 Pin, straight, .500" Lead Length (.018 dia) see note 1 15 Pin, straight, 1.000" Lead Length (.018 dia) see note 1 16 Pin, straight, crimped wire	TYPE CONTACTS/TERMINATIONS: 21 Socket, straight, 26 awg solder cup 2A Socket, straight, 24 awg solder cup 2D Socket, straight, .109" Lead Length (.018 dia) 2E Socket, straight, .125" Lead Length (.018 dia) 2F Socket, straight, .140" Lead Length (.018 dia) 22 Socket, straight, .150" Lead Length (.018 dia) 2G Socket, straight, .156" Lead Length (.018 dia) 2H Socket, straight, .172" Lead Length (.018 dia) 2J Socket, straight, .187" Lead Length (.018 dia) 23 Socket, straight, .250" Lead Length (.018 dia) 2K Socket, straight, .375" Lead Length (.018 dia) 2L Socket, straight, .500" Lead Length (.018 dia) 2M Socket, straight, 1.000" Lead Length (.018 dia) 24 Socket, straight, .500" Lead Length (.018 dia) see note 1 25 Socket, straight, 1.000" Lead Length (.018 dia) see note 1 26 Socket, straight, crimped wire
PLATING OPTIONS: 1 50 µ" Au contacts (crimp wire) 3 50 µ" Au contacts (solder cup, pigtail) 5 50 µ" Au contacts; Sn/Pb alloy terminations ☒ 7 50 µ" Au contacts; SAC305 terminations	PLATING OPTIONS: 1 50 µ" Au contacts (crimp wire) 3 50 µ" Au contacts (solder cup, pigtail) 5 50 µ" Au contacts; Sn/Pb alloy terminations ☒ 7 50 µ" Au contacts; SAC305 terminations
HARDWARE	
STYLE OF HARDWARE: 00 None 22 Two fixed jacknut assemblies (62") 41 Two turning jackscrews, allen head, retaining ring (81") 42 Two long turning jackscrews, allen head, retaining ring (82") 43 Two turning jackscrews, slot head, retaining ring (83") 44 Two long turning jackscrews, slot head, retaining ring (84") 45 Two turning jackscrews, allen head, captivated** (85") 99 Keying hardware, see options below. (Body material 2, 3 and 4 only)	STYLE OF HARDWARE: 00 None 22 Two fixed jacknut assemblies (62") 41 Two turning jackscrews, allen head, retaining ring (81") 42 Two long turning jackscrews, allen head, retaining ring (82") 43 Two turning jackscrews, slot head, retaining ring (83") 44 Two long turning jackscrews, slot head, retaining ring (84") 45 Two turning jackscrews, allen head, captivated** (85") 99 Keying hardware, see options below. (Body material 2, 3 and 4 only)
POLARIZATION / WIRING 00 None XX For wiring codes, see page MA-3 & MA-4	POLARIZATION / WIRING 00 None XX For wiring codes, see page MA-3 & MA-4
OPTIONS	
KSXX Two turning jackscrews. See page MA-6 for keying options KPXX Two fixed jacknuts. See page MA-6 for keying options	KSXX Two turning jackscrews and interfacial sealing gasket. See page MA-6 for keying options KPXX Two fixed jacknuts and interfacial sealing gasket. See page MA-6 for keying options

** = Captive hardware is factory installed and non-removable.
☒ = Option not RoHS compliant

NOTE 1 = The leads on these contacts are soft copper suitable for forming.

AirBorn

Cable to Cable (Jumper Assembly)

.050"

9 thru 51 Contacts

Low Profile Metal

MQ

Low Profile Plastic

MP

MQ-2J2-031-PS1-22WA
(METAL)

MP-2J1-031-PS1-22WA
(PLASTIC)

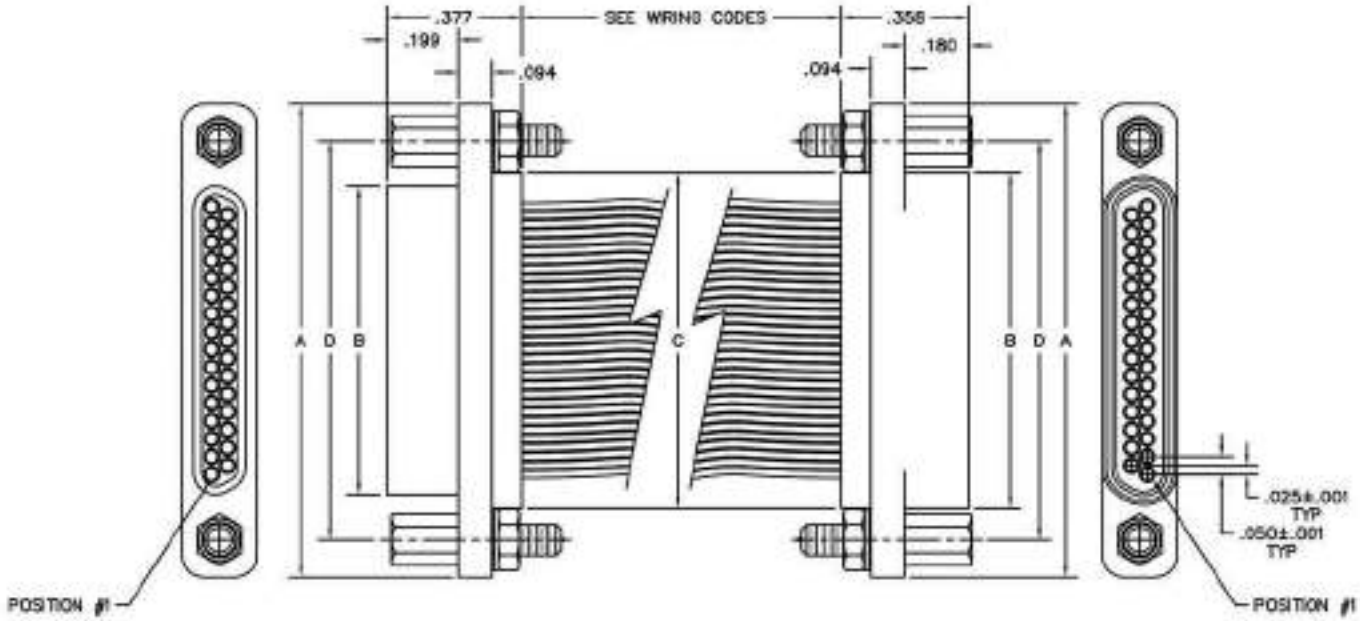

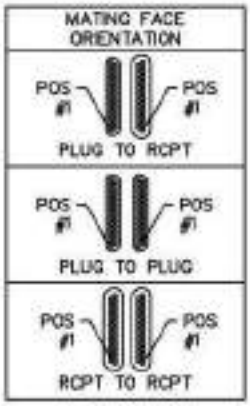

DIMENSIONS									
SIZE	CONTACT ROWS	A	B		C	D	E	H	HARDWARE
			PLUG MAX	RCPT MAX			POTTING WELL MAX		
9	2	.778	.292	.378	.398	.565	.173	.208	#2-56 UNC THD (.092 DIA THRU)
15		.928	.442	.528	.548	.715			
21		1.078	.592	.678	.698	.865			
25		1.178	.692	.778	.798	.965			
31		1.328	.842	.928	.948	1.115			
37		1.478	.992	1.078	1.098	1.265			
51	3	1.428	.942	1.028	1.048	1.215	.220	.250	

AirBorn

MQ–2J2–031–PS1–22WA
MP–2J1–031–PS1–22WA
XX–XXX–XXX–XXX–XXXX–XXXX

SERIES

MQ .050" Low Profile Metal I/O Connector
MP .050" Low Profile Plastic I/O Connector
(MQ & MP mate with MP, MQ, MR, MS receptacles)

BODY

2 2-Row (Sizes 9 thru 37)
3 3-Row (Size 51)

BODY STYLE:
J Jumper assembly, straight, with ears

BODY MATERIAL:
1 Polyphenylene Sulfide (MP only)
2 Polyphenylene Sulfide with electroless nickel shell
3 Polyphenylene Sulfide with electrodeposited cadmium shell ☒
4 Polyphenylene Sulfide with hard anodized black shell
A Pure Electro-Deposited Aluminum
K Zinc Nickel Plating
T Nickel Polymer Plating

SIZE

XXX 009, 015, 021, 025, 031, 037, 051

CONTACTS

TYPE CONTACTS/TERMINATIONS:
PP Plug to plug
PS Plug to receptacle
SS Receptacle to receptacle

PLATING OPTIONS:
1 50 µ" Au contacts (crimp wire)

HARDWARE

STYLE OF HARDWARE:
00 None
22 Four fixed jacknut assemblies
41 Four turning jackscrews, allen head, retaining ring
43 Four turning jackscrews, slot head, retaining ring
45 Four turning jackscrews, allen head, captivated**
46 Two fixed jacknuts and two turning jackscrews, allen head, uninstalled
47 Two fixed jacknuts and two turning jackscrews, slot head, uninstalled
99 Keying hardware, see options below. (Body material 2, 3 and 4 only)

POLARIZATION / WIRING:
XX For wiring codes, see page MA-3 & MA-4

OPTIONS

KSXX Four turning jackscrews. See page MA-6 for keying options
KPXX Four fixed jacknuts. See page MA-6 for keying options

** = Captive hardware is factory installed and non-removable.
☒ = Option not RoHS compliant

AirBorn

Right Angle Boardmount (Narrow Footprint)

.050"

9 thru 100 Contacts

MK, ML

MK-252-031-335-220S (PLUG)

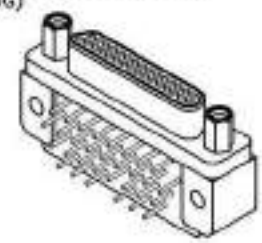

MK-262-031-445-220S (RCPT)

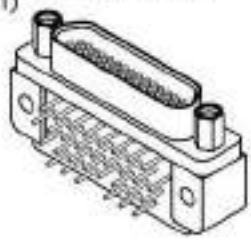

MATING MATRIX	
CONNECTOR	MATES WITH
MK-25...	MK, ML, MM, MN receptacles
ML-25...	MK, ML, MM, MN receptacles
MK-26...	MK, ML, MM, MN plugs
ML-26...	MK, ML, MM, MN plugs

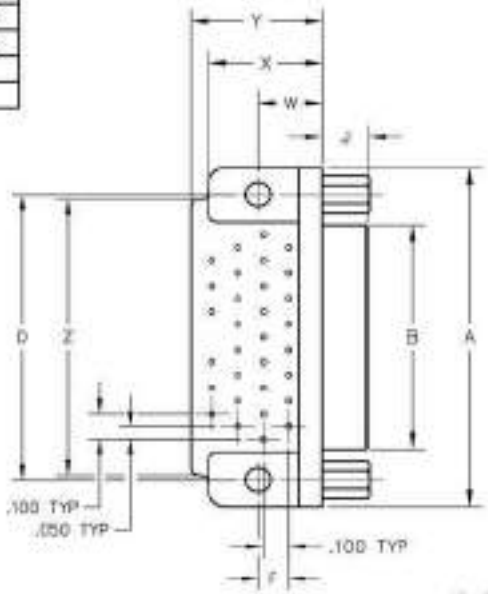

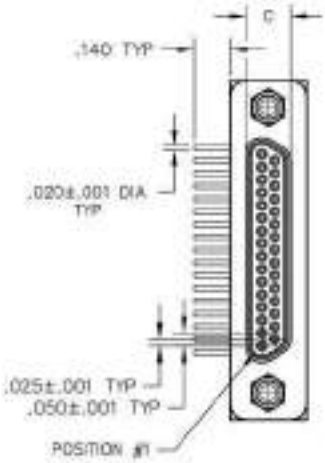

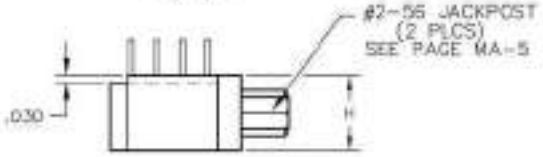

(PLUG SHOWN)

DIMENSIONS																	
SIZE	CONTACT ROWS	A	B		C		D	F	H	J		W	X MAX	Y MAX	Z	HARDWARE	MOUNTING HOLE
			PLUG MAX	RCPT MAX	PLUG MAX	RCPT MAX				PLUG	RCPT						
9	2	.775	.334	.400	.185	.251	.565	.020	.298	.183	.195	.250	.420	.420	.775	#2-56 UNC THD	.096 DIA OR #2-56 UNC THREADED INSERT
15		.925	.484	.550			.715	.120							.925		
21		1.075	.634	.700			.865								1.075		
25		1.175	.734	.800			.965								1.175		
31		1.325	.884	.950			1.115						.450	.520	1.080		
37		1.475	1.034	1.100			1.265								1.180		
51	3	1.425	.984	1.050	.228	.294	1.215	.150	.341			.300	.430	.650	1.220		
69		1.725	1.284	1.350			1.515							.755	1.450		
100	4	2.150	1.384	1.508	.271	.394	1.800	.200	.384			.400	.590	1.000	1.810	#4-40 UNC THD	.125 DIA #2-56 UNC INSERT #4-40 UNC INSERT

AirBorn

PLUG: MK–252–031–335–220S
RECEPTACLE: MK–262–031–445–220S

XX–XXX–XXX–XXX–XXXX–XXX

SERIES | BODY | SIZE | CONTACTS | HARDWARE | OPTIONS

PLUG

SERIES

MK .050" Rugged Metal PC Board Mount Connector
ML .050" Rugged Plastic PC Board Mount Connector
(MK & ML mate with MK, ML, MM, MN, receptacles)

BODY

2 2-Row (Sizes 9 thru 37)
3 3-Row (Size 51 & 69***)
4 4-Row (Size 100)

BODY STYLE:
5 Plug, right angle, narrow footprint, w/ mounting holes

BODY MATERIAL:
1 Polyphenylene Sulfide (ML only)
2 Electroless nickel shell w/ PPS insulator
3 Electrodeposited cadmium shell w/ PPS insulator ☒
4 Hard anodized black shell w/ PPS insulator
5 Stainless steel shell w/ PPS insulator
A Pure Electro-Deposited Aluminum
K Zinc Nickel Plating
T Nickel Polymer Plating

SIZE

XXX 009, 015, 021, 025, 031, 037, 051, 069***, 100

CONTACTS

TYPE CONTACTS/TERMINATIONS:
32 Pin, right angle, PCB leads, .109"
33 Pin, right angle, PCB leads, .140"
34 Pin, right angle, PCB leads, .172"

PLATING OPTIONS:
3 50 µ" Au contacts: Au terminations
5 50 µ" Au contacts: Sn/Pb alloy terminations ☒
7 50 µ" Au contacts: SAC305 terminations

HARDWARE

STYLE OF HARDWARE:
00 None
22 Two fixed jacknuts (62*)
41 Two turning jackscrews, allen head, retaining ring****(61*)
99 Keying hardware, see options below (Body material 2, 3 and 4 only)

POLARIZATION / WIRING:
0R Reversed body polarization
0S Standard body polarization

OPTIONS

KPXX Two fixed jacknuts (KN*)
94P Mil-Spec footprint (size 100 only), standard body polarization
0B7 #2-56 threaded inserts, standard body polarization
0BJ Mil-Spec footprint (size 100 only) with #2-56 threaded inserts, standard body polarization
0H7 #4-40 threaded inserts (size 100 only), standard body polarization
0H8 Mil-Spec footprint (size 100 only) with #4-40 threaded inserts, standard body polarization

NOTES

See page MA-6 for keying options
* = Use numbers in parenthesis when ordering size 100.
*** = 69 position connectors are available in metal only.
**** = Connector body has no mounting holes.
☒ = Option not RoHS compliant

RECEPTACLE

SERIES

MK .050" Rugged Metal PC Board Mount Connector
ML .050" Rugged Plastic PC Board Mount Connector
(MK & ML mate with MK, ML, MM, MN plugs)

BODY

2 2-Row (Sizes 9 thru 37)
3 3-Row (Size 51 & 69***)
4 4-Row (Size 100)

BODY STYLE:
6 Receptacle, right angle, narrow footprint, w/ mounting holes

BODY MATERIAL:
1 Polyphenylene Sulfide (ML only)
2 Electroless nickel shell w/ PPS insulator
3 Electrodeposited cadmium shell w/ PPS insulator ☒
4 Hard anodized black shell w/ PPS insulator
5 Stainless steel shell w/ PPS insulator
A Pure Electro-Deposited Aluminum
K Zinc Nickel Plating
T Nickel Polymer Plating

SIZE

XXX 009, 015, 021, 025, 031, 037, 051, 069***, 100

CONTACTS

TYPE CONTACTS/TERMINATIONS:
43 Socket, right angle, PCB leads, .109"
44 Socket, right angle, PCB leads, .140"
45 Socket, right angle, PCB leads, .172"

PLATING OPTIONS:
3 50 µ" Au contacts: Au terminations
5 50 µ" Au contacts: Sn/Pb alloy terminations ☒
7 50 µ" Au contacts: SAC305 terminations

HARDWARE

STYLE OF HARDWARE:
00 None
22 Two fixed jacknuts (62*)
41 Two turning jackscrews, allen head, retaining ring****(61*)
99 Keying hardware, see options below (Body material 2, 3 and 4 only)

POLARIZATION / WIRING:
0R Reversed body polarization
0S Standard body polarization

OPTIONS

KPXX Two fixed jacknuts (KN*) and interfacial sealing gasket.
900 Interfacial sealing gasket
0B7 #2-56 Threaded inserts and interfacial sealing gasket standard body polarization
0H7 #4-40 threaded inserts (size 100 only), and interfacial sealing gasket, standard body polarization

NOTES

See page MA-6 for keying options
* = Use numbers in parenthesis when ordering size 100.
*** = 69 position connectors are available in metal only.
**** = Connector body has no mounting holes.
☒ = Option not RoHS compliant

AirBorn

Right Angle Boardmount (Thru Clearance Cut)

.050"

9 thru 100 Contacts

MK

MATING MATRIX	
CONNECTOR	MATES WITH
MK-2R...	MK, ML, MM, MN receptacles
MK-2S...	MK, ML, MM, MN plugs

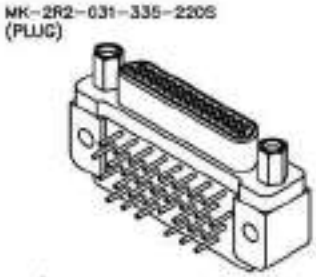

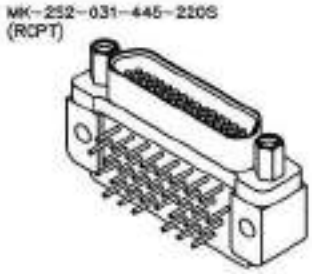

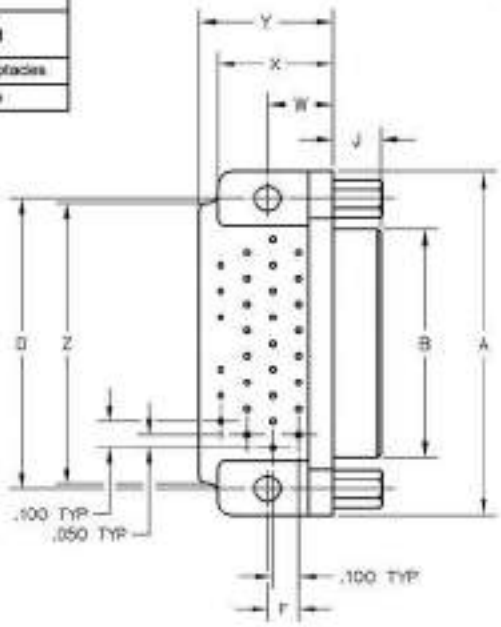

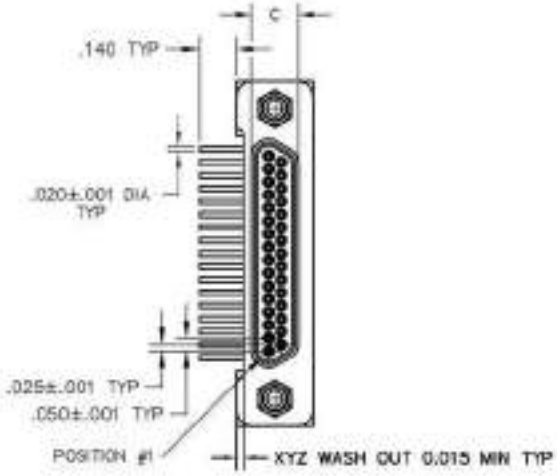

(PLUG SHOWN)

DIMENSIONS																	
SIZE	CONTACT ROWS	A	B		C		D	F	H	J		W	X MAX	Y MAX	Z	HARDWARE	MOUNTING HOLE
			PLUG MAX	RCPT MAX	PLUG MAX	RCPT MAX				PLUG	RCPT						
9	2	.775	.334	.400	.185	.251	.565	.020	.298	.183	.195	.250	.420	.420	.775	#2-56 UNC THD	.096 DIA OR #2-56 UNC THREADED INSERT
15		.925	.484	.550			.715	.120							.925		
21		1.075	.634	.700			.865								1.075		
25		1.175	.734	.800			.965								1.175		
31		1.325	.884	.950			1.115						.450	.520	1.080		
37		1.475	1.034	1.100			1.265								1.180		
51	3	1.425	.984	1.050	.228	.294	1.215	.150	.341			.300	.430	.650	1.220		
69		1.725	1.284	1.350			1.515							.755	1.450		
100	4	2.160	1.384	1.508	.271	.394	1.800	.200	.384			.400	.590	1.000	1.810	#4-40 UNC THD	.125 DIA #2-56 UNC INSERT #4-40 UNC INSERT

PLUG: MK-2R2-031-335-220S
RECEPTACLE: MK-2S2-031-445-220S

XX-XXX-XXX-XXX-XXXX-XXX

SERIES | BODY | SIZE | CONTACTS | HARDWARE | OPTIONS

PLUG

SERIES

MK .050" Rugged Metal PC Board Mount Connector
(MK mates with MK, ML, MM, MN, receptacles)

BODY

2 2-Row (Sizes 9 thru 37)
3 3-Row (Size 51 & 69)
4 4-Row (size 100 only)

BODY STYLE: Thru Cut
R Plug, right angle (thru clearance cut), narrow footprint, w/ mounting holes

BODY MATERIAL:
2 Electroless nickel shell w/ PPS insulator
3 Electrodeposited cadmium shell w/ PPS insulator ☒
4 Hard anodized black shell w/ PPS insulator
5 Stainless steel shell w/ PPS insulator
A Pure Electro-Deposited Aluminum
K Zinc Nickel Plating
T Nickel Polymer Plating

SIZE

XXX 009, 015, 021, 025, 031, 037, 051, 069, 100

CONTACTS

TYPE CONTACTS/TERMINATIONS:
32 Pin, right angle, PCB leads, .109"
33 Pin, right angle, PCB leads, .140"
34 Pin, right angle, PCB leads, .172"

PLATING OPTIONS:
3 50 µ" Au contacts; Au terminations
5 50 µ" Au contacts; Sn/Pb alloy terminations ☒
7 50 µ" Au contacts; SAC305 terminations

HARDWARE

STYLE OF HARDWARE:
00 None
22 Two fixed jacknuts (62)
41 Two turning jackscrews, allen head, retaining ring**** (81)
99 Keying hardware, see options below (Body material 2, 3 and 4 only)

POLARIZATION / WIRING:
0R Reversed body polarization**
0S Standard body polarization

OPTIONS

KPXX Two fixed jacknuts (KN*)
94P Mil-Spec footprint (size 100 only), standard body polarization
0B7 #2-56 threaded inserts, standard body polarization
0BJ Mil-Spec footprint (size 100 only) with #2-56 threaded inserts, standard body polarization
0H7 #4-40 threaded inserts (size 100 only), standard body polarization
0H6 Mil-Spec footprint (size 100 only) with #4-40 threaded inserts, standard body polarization

NOTES

See page MA-6 for keying options
* = Use numbers in parenthesis when ordering size 100.
** = 100 position connector standard body polarization only.
**** = Connector body has no mounting holes.
☒ = Option not RoHS compliant

RECEPTACLE

SERIES

MK .050" Rugged Metal PC Board Mount Connector
(MK mates with MK, ML, MM, MN plugs)

BODY

2 2-Row (Sizes 9 thru 37)
3 3-Row (Size 51 & 69)
4 4-Row (Size 100 only)

BODY STYLE: Thru Cut
S Receptacle, right angle (thru clearance cut), narrow footprint, w/ mounting holes

BODY MATERIAL:
2 Electroless nickel shell w/ PPS insulator
3 Electrodeposited cadmium shell w/ PPS insulator ☒
4 Hard anodized black shell w/ PPS insulator
5 Stainless steel shell w/ PPS insulator
A Pure Electro-Deposited Aluminum
K Zinc Nickel Plating
T Nickel Polymer Plating

SIZE

XXX 009, 015, 021, 025, 031, 037, 051, 069, 100

CONTACTS

TYPE CONTACTS/TERMINATIONS:
43 Socket, right angle, PCB leads, .109"
44 Socket, right angle, PCB leads, .140"
45 Socket, right angle, PCB leads, .172"

PLATING OPTIONS:
3 50 µ" Au contacts; Au terminations
5 50 µ" Au contacts; Sn/Pb alloy terminations ☒
7 50 µ" Au contacts; SAC305 terminations

HARDWARE

STYLE OF HARDWARE:
00 None
22 Two fixed jacknuts (62)
41 Two turning jackscrews, allen head, retaining ring**** (81)
99 Keying hardware, see options below (Body material 2, 3 and 4 only)

POLARIZATION / WIRING:
0R Reversed body polarization**
0S Standard body polarization

OPTIONS

KPXX Two fixed jacknuts (KN*) and interfacial sealing gasket.
9C0 Interfacial sealing gasket
0B7 #2-56 Threaded inserts and interfacial sealing gasket standard body polarization
0H7 #4-40 threaded inserts (size 100 only), and interfacial sealing gasket, standard body polarization

NOTES

See page MA-6 for keying options
* = Use numbers in parenthesis when ordering size 100.
** = 100 position connector standard body polarization only.
**** = Connector body has no mounting holes.
☒ = Option not RoHS compliant

AirBorn

Right Angle Boardmount (Blind Clearance Cut)

.050"

9 thru 100 Contacts

MK

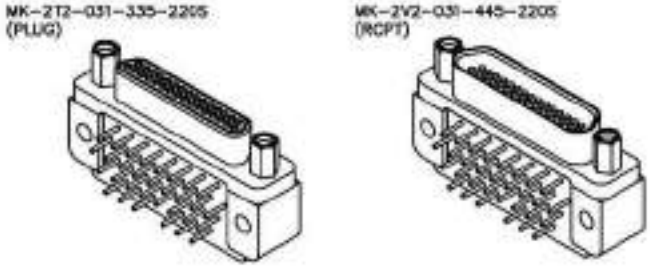

MATING MATRIX	
CONNECTOR	MATES WITH
MK-2T..	MK, ML, MM, MN receptacles
MK-2V..	MK, ML, MM, MN plugs

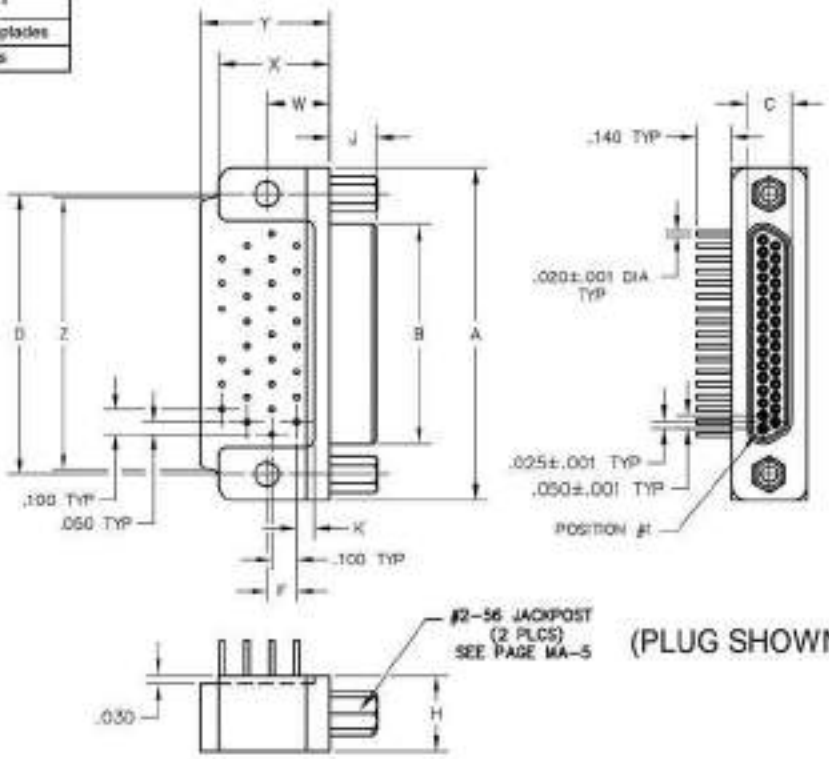

(PLUG SHOWN)

DIMENSIONS																		
SIZE	CONTACT ROWS	A	B		C		D	F	H	J		K	W	X MAX	Y MAX	Z	HARDWARE	MOUNTING HOLE
			PLUG MAX	RCPT MAX	PLUG MAX	RCPT MAX				PLUG	RCPT							
9	2	.775	.334	.400	.185	.251	.565	.020	.298	.183	.195	.067	.250	.420	.420	.775	#2-56 UNC THD	.096 DIA OR #2-56 UNC THREADED INSERT
15		.925	.484	.550			.715	.120								.925		
21		1.075	.634	.700			.865									1.075		
25		1.175	.734	.800			.965									1.175		
31		1.325	.884	.950			1.115							.450	.520	1.060		
37		1.475	1.034	1.100			1.265									1.180		
51	3	1.425	.984	1.050	.228	.294	1.215	.150	.341			.087	.300	.430	.650	1.220		
69		1.725	1.284	1.350			1.515								.755	1.450		
100	4	2.160	1.384	1.508	.271	.394	1.800	.200	.384			.137	.400	.590	1.000	1.810	#4-40 UNC THD	.125 DIA #2-56 UNC INSERT #4-40 UNC INSERT

PLUG: MK-2T2-031-335-220S
RECEPTACLE: MK-2V2-031-445-220S

XX-XXX-XXX-XXX-XXXX-XXX

SERIES | BODY | SIZE | CONTACTS | HARDWARE | OPTIONS

PLUG

SERIES

MK .050" Rugged Metal PC Board Mount Connector
(MK mates with MK, ML, MM, MN, receptacles)

BODY

2 2-Row (Sizes 9 thru 37)
3 3-Row (Size 51 & 69)
4 4-Row (Size 100)

BODY STYLE: Blind Cut
T Plug, right angle (blind clearance cut), narrow footprint, w/ mounting holes

BODY MATERIAL:
2 Electroless nickel shell w/ PPS insulator
3 Electrodeposited cadmium shell w/ PPS insulator ☒
4 Hard anodized black shell w/ PPS insulator
5 Stainless steel shell w/ PPS insulator
A Pure Electro-Deposited Aluminum
K Zinc Nickel Plating
T Nickel Polymer Plating

SIZE

XXX 009, 015, 021, 025, 031, 037, 051, 069, 100

CONTACTS

TYPE CONTACTS/TERMINATIONS:
32 Pin, right angle, PCB leads, .109"
33 Pin, right angle, PCB leads, .140"
34 Pin, right angle, PCB leads, .172"

PLATING OPTIONS:
3 50 µ" Au contacts; Au terminations
5 50 µ" Au contacts; Sn/Pb alloy terminations ☒
7 50 µ" Au contacts; SAC305 terminations

HARDWARE

STYLE OF HARDWARE:
00 None
22 Two fixed jacknuts (62*)
41 Two turning jackscrews, allen head, retaining ring****(81*)
99 Keying hardware, see options below (Body material 2, 3 and 4 only)

POLARIZATION / WIRING:
0R Reversed body polarization
0S Standard body polarization

OPTIONS

KPXX Two fixed jacknuts (KN*)
94P Mil-Spec footprint (size 100 only), standard body polarization
0B7 #2-56 threaded inserts, standard body polarization
0BJ Mil-Spec footprint (size 100 only) with #2-56 threaded inserts, standard body polarization
0H7 #4-40 threaded inserts (size 100 only), standard body polarization
0H6 Mil-Spec footprint (size 100 only) with #4-40 threaded inserts, standard body polarization

NOTES

See page MA-6 for keying options
* = Use numbers in parenthesis when ordering size 100.
**** = Connector body has no mounting holes.
☒ = Option not RoHS compliant

RECEPTACLE

SERIES

MK .050" Rugged Metal PC Board Mount Connector
(MK mates with MK, ML, MM, MN plugs)

BODY

2 2-Row (Sizes 9 thru 37)
3 3-Row (Size 51 & 69)
4 4-Row (Size 100)

BODY STYLE: Blind Cut
V Receptacle, right angle (blind clearance cut), narrow footprint, w/ mounting holes

BODY MATERIAL:
2 Electroless nickel shell w/ PPS insulator
3 Electrodeposited cadmium shell w/ PPS insulator ☒
4 Hard anodized black shell w/ PPS insulator
5 Stainless steel shell w/ PPS insulator
A Pure Electro-Deposited Aluminum
K Zinc Nickel Plating
T Nickel Polymer Plating

SIZE

XXX 009, 015, 021, 025, 031, 037, 051, 069, 100

CONTACTS

TYPE CONTACTS/TERMINATIONS:
43 Socket, right angle, PCB leads, .109"
44 Socket, right angle, PCB leads, .140"
45 Socket, right angle, PCB leads, .172"

PLATING OPTIONS:
3 50 µ" Au contacts; Au terminations
5 50 µ" Au contacts; Sn/Pb alloy terminations ☒
7 50 µ" Au contacts; SAC305 terminations

HARDWARE

STYLE OF HARDWARE:
00 None
22 Two fixed jacknuts (62*)
41 Two turning jackscrews, allen head, retaining ring****(81*)
99 Keying hardware, see options below (Body material 2, 3 and 4 only)

POLARIZATION / WIRING:
0R Reversed body polarization
0S Standard body polarization

OPTIONS

KPXX Two fixed jacknuts (KN*) and interfacial sealing gasket.
900 Interfacial sealing gasket
0B7 #2-56 Threaded inserts and interfacial sealing gasket, standard body polarization
0H7 #4-40 threaded inserts (size 100 only), and interfacial sealing gasket, standard body polarization

NOTES

See page MA-6 for keying options
* = Use numbers in parenthesis when ordering size 100.
**** = Connector body has no mounting holes.
☒ = Option not RoHS compliant

AirBorn

Board (Narrow Footprint) to Flex Cable

.050"

9 thru 100 Contacts

Rugged Board Mount **MK, ML**

Flex Cable **MK, ML**

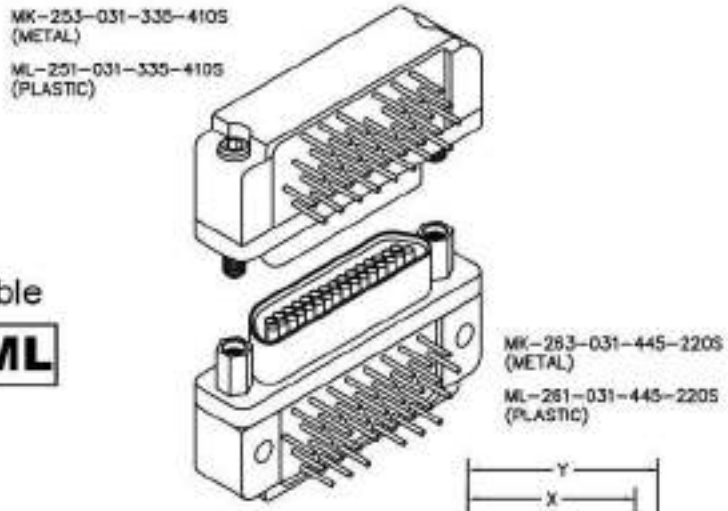

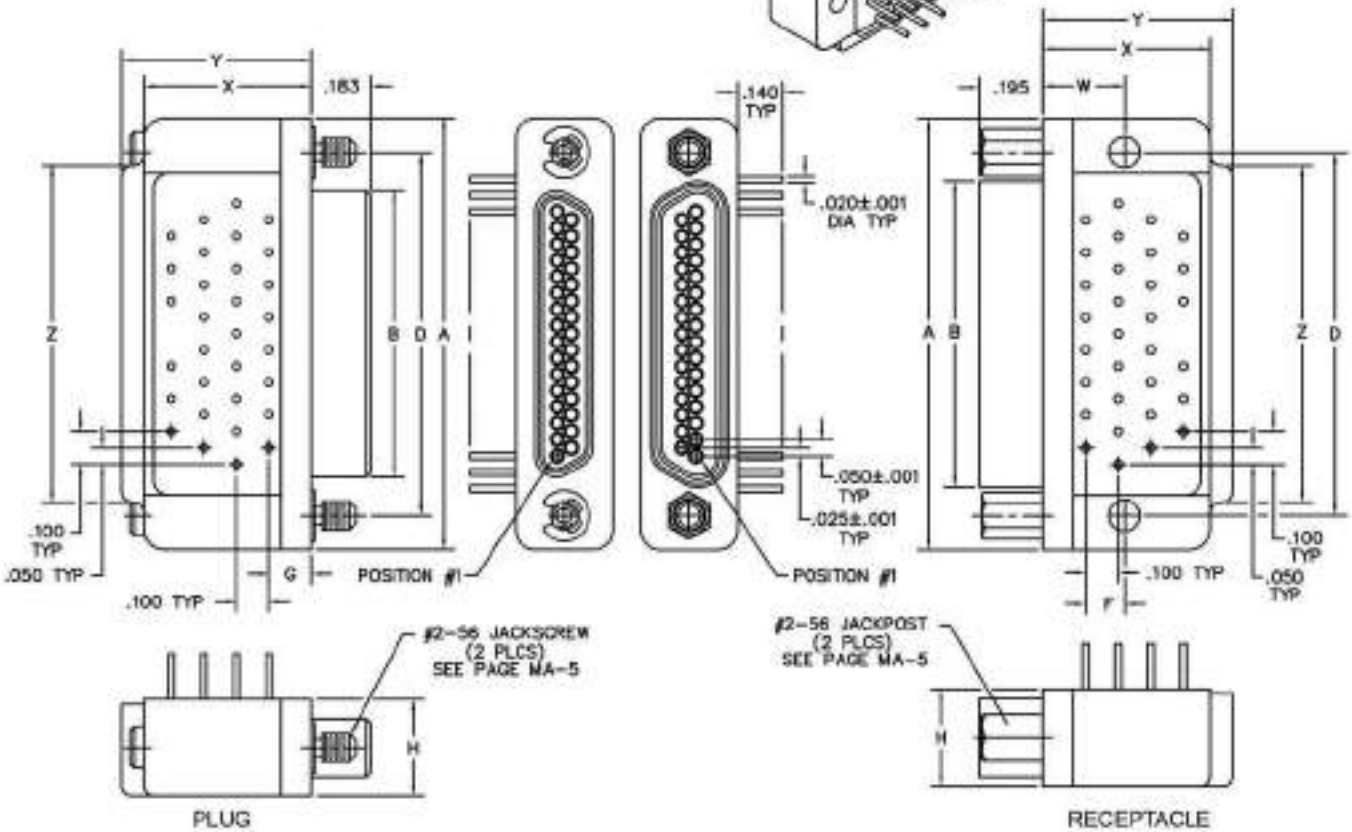

DIMENSIONS														
SIZE	CONTACT ROWS	A	B PLUG MAX	B RCPT MAX	D	F	G	H	W	X MAX	Y MAX	Z	HARDWARE	MOUNTING HOLE
9	2	.775	.334	.400	.565	.020	.230	.298	.250	.420	.420	.775	#2-56 UNC THD	.096 DIA OR #2-56 UNC THREADED INSERT
15		.925	.484	.550	.715	.120	.130					.925		
21		1.075	.634	.700	.865							1.075		
25		1.175	.734	.800	.965							1.175		
31		1.325	.884	.950	1.115					.450	.520	1.080		
37		1.475	1.034	1.100	1.265							1.180		
51	3	1.425	.984	1.050	1.215	.150	.150	.341	.300	.430	.650	1.220		
69*		1.725	1.284	1.350	1.515						.755	1.450		
100	4	2.160	1.384	1.508	1.800	.200	.200	.384	.400	.590	1.000	1.810	#4-40 UNC THD	.125 DIA OR #2-56 UNC THREADED INSERT

* = 69 POSITION CONNECTORS ARE AVAILABLE IN METAL ONLY.

AirBorn

PLUG: MK-253-031-335-410S
RECEPTACLE: MK-263-031-445-220S
PLUG: ML-251-031-335-410S
RECEPTACLE: ML-261-031-445-220S

XX-XXX-XXX-XXX-XXXX-XXX

PLUG	RECEPTACLE
SERIES	
MK .050" Rugged Metal PC Board Mount Connector ML .050" Rugged Plastic PC Board Mount Connector (MK & ML mate with MK, ML, MM, MN receptacles)	MK .050" Rugged Metal PC Board Mount Connector ML .050" Rugged Plastic PC Board Mount Connector (MK & ML mate with MK, ML, MM, MN plugs)
BODY	
2 2-Row (Sizes 9 thru 37) 3 3-Row (Size 51 & 69***) 4 4-Row (Size 100)	2 2-Row (Sizes 9 thru 37) 3 3-Row (Size 51 & 69***) 4 4-Row (Size 100)
BODY STYLE: 5 Plug, right angle, narrow footprint, w/ mtg holes	BODY STYLE: 6 Receptacle, right angle, narrow footprint, w/ mtg holes
BODY MATERIAL: 1 Polyphenylene Sulfide (ML only) 2 Electroless nickel shell w/ PPS insulator 3 Electrodeposited cadmium shell w/ PPS insulator ☒ 4 Hard anodized black shell w/ PPS insulator 5 Stainless steel shell w/ PPS insulator A Pure Electro-Deposited Aluminum K Zinc Nickel Plating T Nickel Polymer Plating	BODY MATERIAL: 1 Polyphenylene Sulfide (ML only) 2 Electroless nickel shell w/ PPS insulator 3 Electrodeposited cadmium shell w/ PPS insulator ☒ 4 Hard anodized black shell w/ PPS insulator 5 Stainless steel shell w/ PPS insulator A Pure Electro-Deposited Aluminum K Zinc Nickel Plating T Nickel Polymer Plating
SIZE	
XXX 009, 015, 021, 025, 031, 037, 051, 069***, 100	XXX 009, 015, 021, 025, 031, 037, 051, 069***, 100
CONTACTS	
TYPE CONTACTS/TERMINATIONS: 32 Pin, right angle, PCB leads, .109" 33 Pin, right angle, PCB leads, .140" 34 Pin, right angle, PCB leads, .172"	TYPE CONTACTS/TERMINATIONS: 43 Socket, right angle, PCB leads, .109" 44 Socket, right angle, PCB leads, .140" 45 Socket, right angle, PCB leads, .172"
PLATING OPTIONS: 3 50 µ" Au contacts: Au terminations 5 50 µ" Au contacts: Sn/Pb alloy terminations ☒ 7 50 µ" Au contacts: SAC305 terminations	PLATING OPTIONS: 3 50 µ" Au contacts: Au terminations 5 50 µ" Au contacts: Sn/Pb alloy terminations ☒ 7 50 µ" Au contacts: SAC305 terminations
HARDWARE	
STYLE OF HARDWARE: 00 None 22 Two fixed jacknut assemblies (62") 41 Two turning jackscrews, allen head, retaining ring**** (81")	STYLE OF HARDWARE: 00 None 22 Two fixed jacknut assemblies (62") 41 Two turning jackscrews, allen head, retaining ring**** (81")
POLARIZATION / WIRING: 0R Reversed body polarization 0S Standard body polarization	POLARIZATION / WIRING 0R Reversed body polarization 0S Standard body polarization
OPTIONS	
94P Mil-Spec footprint (size 100 only) Standard body polarization 0B7 Threaded inserts, standard body polarization 0BJ Mil-Spec footprint (size 100 only) with threaded inserts, standard body polarization	900 Interfacial sealing gasket 0B7 Threaded inserts and interfacial sealing gasket, standard body polarization

* = Use numbers in parenthesis when ordering size 100.
*** = 69 position connectors are available in metal only.
**** = Connector body has no mounting holes.

☒ = Option not RoHS compliant

AirBorn

Right Angle Boardmount Low Profile (Narrow Footprint)

.050"

9 thru 51 Contacts

MS, MR

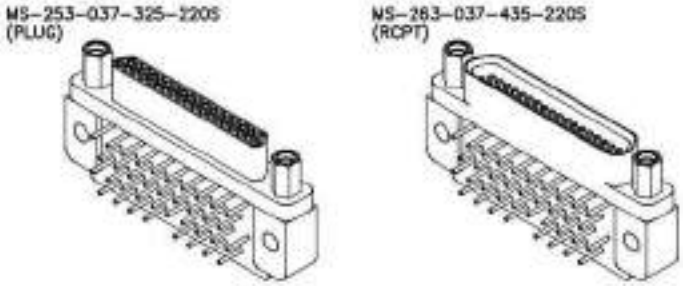

MATING MATRIX	
CONNECTOR	MATES WITH
MS-25...	MP, MQ, MR, MS receptacles
MR-25...	MP, MQ, MR, MS receptacles
MS-26...	MP, MQ, MR, MS plugs
MR-26...	MP, MQ, MR, MS plugs

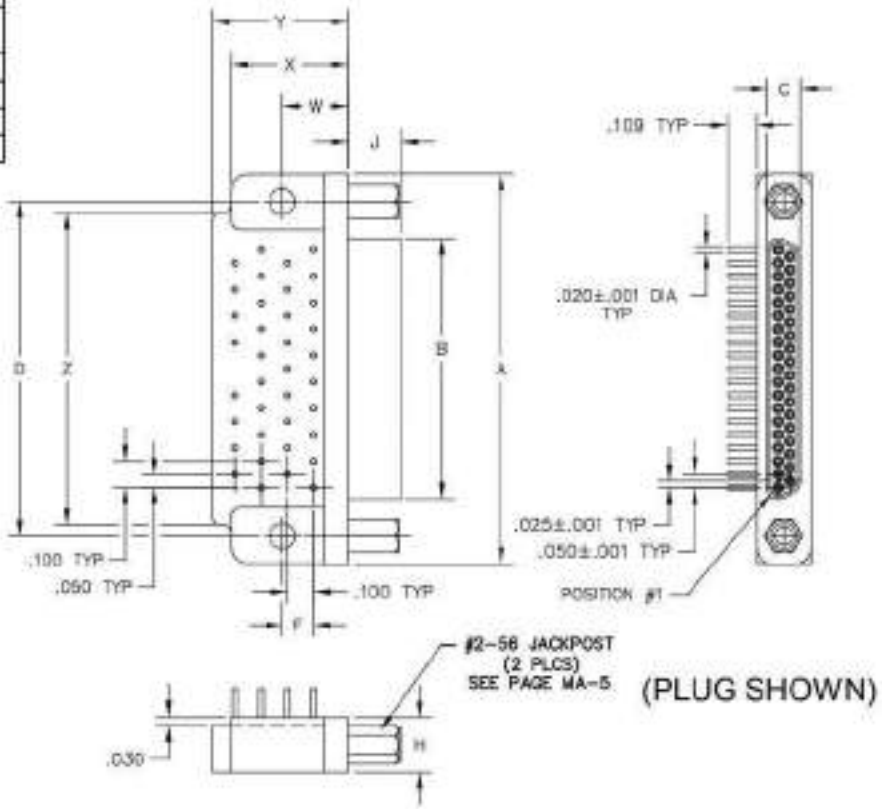

(PLUG SHOWN)

DIMENSIONS																	
SIZE	CONTACT ROWS	A	B		C		D	F	H	J		W	X MAX	Y MAX	Z	HARDWARE	MOUNTING HOLE
			PLUG MAX	RCPT MAX	PLUG MAX	RCPT MAX				PLUG	RCPT						
9	2	.778	.292	.378	.134	.218	.565	.020	.208	.199	.180	.250	.420	.420	.775	#2-56 UNC THD	.096 DIA OR #2-56 UNC THREADED INSERT
15		.928	.442	.528			.715	.120							.925		
21		1.078	.592	.678			.865								1.075		
25		1.178	.692	.778			.965								1.175		
31		1.328	.842	.928			1.115						.450	.520	1.080		
37		1.478	.992	1.078			1.265								1.180		
51	3	1.428	.942	1.028	.177	.260	1.215	.150	.250			.300	.425	.650	1.220		

AirBorn

PLUG: MS-253-037-325-220S
RECEPTACLE: MS-263-037-435-220S

XX-XXX-XXX-XXX-XXXX-XXX

SERIES | BODY | SIZE | CONTACTS | HARDWARE | OPTIONS

PLUG

SERIES

MS .050" Low Profile Metal PC Board Mount Connector
MR .050" Low Profile Plastic PC Board Mount Connector
(MS & MR mate with MP, MQ, MR, MS, receptacles)

BODY

2 2-Row (Sizes 9 thru 37)
3 3-Row (Size 51)

BODY STYLE:
5 Plug, right angle, narrow footprint, w/ mounting holes

BODY MATERIAL:
1 Polyphenylene Sulfide (MR only)
2 Electroless nickel shell w/ PPS insulator
3 Electrodeposited cadmium shell w/ PPS insulator ☒
4 Hard anodized black shell w/ PPS insulator

SIZE

XXX 009, 015, 021, 025, 031, 037, 051

CONTACTS

TYPE CONTACTS/TERMINATIONS:
32 Pin, right angle, PCB leads, .109"
33 Pin, right angle, PCB leads, .140"
34 Pin, right angle, PCB leads, .172"

PLATING OPTIONS:
3 50 µ" Au contacts; Au terminations
5 50 µ" Au contacts; Sn/Pb alloy terminations ☒
7 50 µ" Au contacts; SAC305 terminations

HARDWARE

STYLE OF HARDWARE:
00 None
22 Two fixed jacknuts
41 Two turning jackscrews, allen head, retaining ring*
99 Keying hardware, see options below (Body material 2, 3 and 4 only)

POLARIZATION / WIRING:
0R Reversed body polarization
0S Standard body polarization

OPTIONS

KPXX Two fixed jacknuts
905 Threaded inserts, standard body polarization

NOTES

See page MA-6 for keying options
* = Connector body has no mounting holes.
☒ = Option not RoHS compliant

RECEPTACLE

SERIES

MS .050" Low Profile Metal PC Board Mount Connector
MR .050" Low Profile Plastic PC Board Mount Connector
(MS & MR mate with MP, MQ, MR, MS plugs)

BODY

2 2-Row (Sizes 9 thru 37)
3 3-Row (Size 51)

BODY STYLE:
6 Receptacle, right angle, narrow footprint, w/ mounting holes

BODY MATERIAL:
1 Polyphenylene Sulfide (MR only)
2 Electroless nickel shell w/ PPS insulator
3 Electrodeposited cadmium shell w/ PPS insulator ☒
4 Hard anodized black shell w/ PPS insulator

SIZE

XXX 009, 015, 021, 025, 031, 037, 051

CONTACTS

TYPE CONTACTS/TERMINATIONS:
43 Socket, right angle, PCB leads, .109"
44 Socket, right angle, PCB leads, .140"
45 Socket, right angle, PCB leads, .172"

PLATING OPTIONS:
3 50 µ" Au contacts; Au terminations
5 50 µ" Au contacts; Sn/Pb alloy terminations ☒
7 50 µ" Au contacts; SAC305 terminations

HARDWARE

STYLE OF HARDWARE:
00 None
22 Two fixed jacknuts
41 Two turning jackscrews, allen head, retaining ring*
99 Keying hardware, see options below (Body material 2, 3 and 4 only)

POLARIZATION / WIRING:
0R Reversed body polarization
0S Standard body polarization

OPTIONS

KPXX Two fixed jacknuts
905 Threaded inserts, standard body polarization

NOTES

See page MA-6 for keying options
* = Connector body has no mounting holes.
☒ = Option not RoHS compliant

AirBorn

Right Angle Boardmount Low Profile (Blind Clearance Cut)

.050"

9 thru 51 Contacts

MS

MATING MATRIX	
CONNECTOR	MATES WITH
MS-2T...	MP, MQ, MR, MS receptacles
MS-2V...	MP, MQ, MR, MS plugs

MS-2T3-037-325-220S (PLUG)

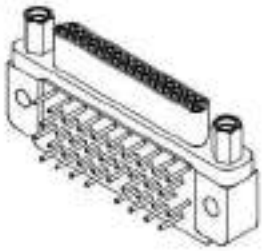

MS-2V3-037-435-220S (RCPT)

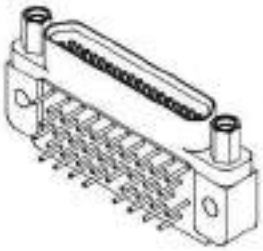

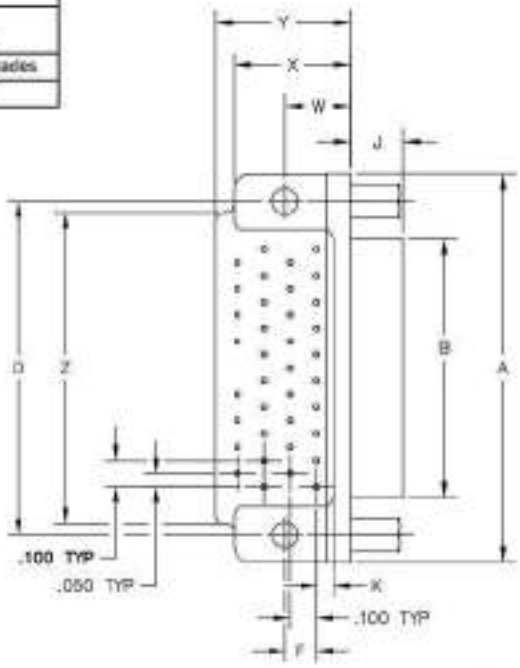

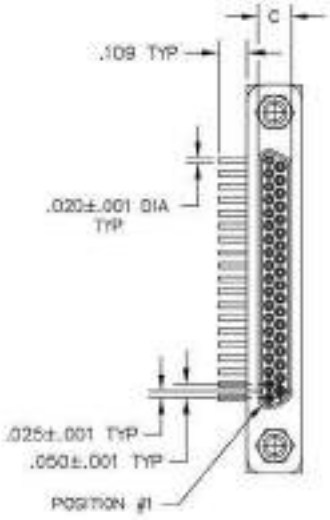

(PLUG SHOWN)

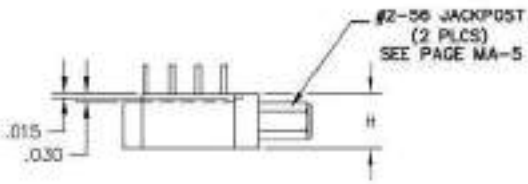

DIMENSIONS																		
SIZE	CONTACT ROWS	A	B		C		D	F	H	J		K	W	X MAX	Y MAX	Z	HARDWARE	MOUNTING HOLE
			PLUG MAX	RCPT MAX	PLUG MAX	RCPT MAX				PLUG	RCPT							
9	2	.778	.292	.378	.134	.218	.565	.020	.208	.199	.180	.067	.250	.420	.420	.775	#2-56 UNC THD	.096 DIA OR #2-56 UNC THREADED INSERT
15		.928	.442	.528			.715	.120								.925		
21		1.078	.592	.678			.865									1.075		
25		1.178	.692	.778			.965									1.175		
31		1.328	.842	.928			1.115							.450	.520	1.080		
37		1.478	.992	1.078			1.265									1.180		
51	3	1.428	.942	1.028	.177	.260	1.215	.150	.250			.087	.300	.425	.650	1.220		

PLUG: MS–2T3–037–325–220S
RECEPTACLE: MS–2V3–037–435–220S

XX–XXX–XXX–XXX–XXXX–XXX

SERIES | BODY | SIZE | CONTACTS | HARDWARE | OPTIONS

PLUG

SERIES

MS .050" Low Profile Metal PC Board Mount Connector
(MS mates with MP, MQ, MR, MS, receptacles)

BODY

2 2-Row (Sizes 9 thru 37)
3 3-Row (Size 51)

BODY STYLE:
T Plug, right angle, narrow footprint, w/ mounting holes

BODY MATERIAL:
2 Electroless nickel shell w/ PPS insulator
3 Electrodeposited cadmium shell w/ PPS insulator ☒
4 Hard anodized black shell w/ PPS insulator

SIZE

XXX 009, 015, 021, 025, 031, 037, 051

CONTACTS

TYPE CONTACTS/TERMINATIONS:
32 Pin, right angle, PCB leads, .109"
33 Pin, right angle, PCB leads, .140"
34 Pin, right angle, PCB leads, .172"

PLATING OPTIONS:
3 50 µ" Au contacts; Au terminations
5 50 µ" Au contacts; Sn/Pb alloy terminations ☒
7 50 µ" Au contacts; SAC305 terminations

HARDWARE

STYLE OF HARDWARE:
00 None
22 Two fixed jacknuts
41 Two turning jackscrews, allen head, retaining ring*
99 Keying hardware, see options below

POLARIZATION / WIRING:
0R Reversed body polarization
0S Standard body polarization

OPTIONS

KPXX Two fixed jacknuts
905 Threaded inserts, standard body polarization

NOTES

See page MA-6 for keying options
* = Connector body has no mounting holes.
☒ = Option not RoHS compliant

RECEPTACLE

SERIES

MS .050" Low Profile Metal PC Board Mount Connector
(MS mates with MP, MQ, MR, MS plugs)

BODY

2 2-Row (Sizes 9 thru 37)
3 3-Row (Size 51)

BODY STYLE:
V Receptacle, right angle, narrow footprint, w/ mounting holes

BODY MATERIAL:
2 Electroless nickel shell w/ PPS insulator
3 Electrodeposited cadmium shell w/ PPS insulator ☒
4 Hard anodized black shell w/ PPS insulator

SIZE

XXX 009, 015, 021, 025, 031, 037, 051

CONTACTS

TYPE CONTACTS/TERMINATIONS:
43 Socket, right angle, PCB leads, .109"
44 Socket, right angle, PCB leads, .140"
45 Socket, right angle, PCB leads, .172"

PLATING OPTIONS:
3 50 µ" Au contacts; Au terminations
5 50 µ" Au contacts; Sn/Pb alloy terminations ☒
7 50 µ" Au contacts; SAC305 terminations

HARDWARE

STYLE OF HARDWARE:
00 None
22 Two fixed jacknuts
41 Two turning jackscrews, allen head, retaining ring*
99 Keying hardware, see options below

POLARIZATION / WIRING:
0R Reversed body polarization
0S Standard body polarization

OPTIONS

KPXX Two fixed jacknuts
905 Threaded inserts, standard body polarization

NOTES

See page MA-6 for keying options
* = Connector body has no mounting holes.
☒ = Option not RoHS compliant

AirBorn

Board (Narrow Footprint) to Flex Cable

.050"

9 thru 51 Contacts

Low Profile Board Mount

MS, MR

Flex Cable

MS, MR

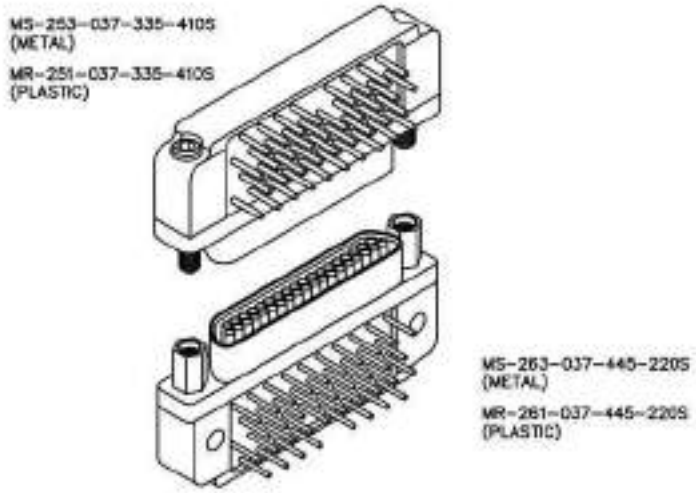

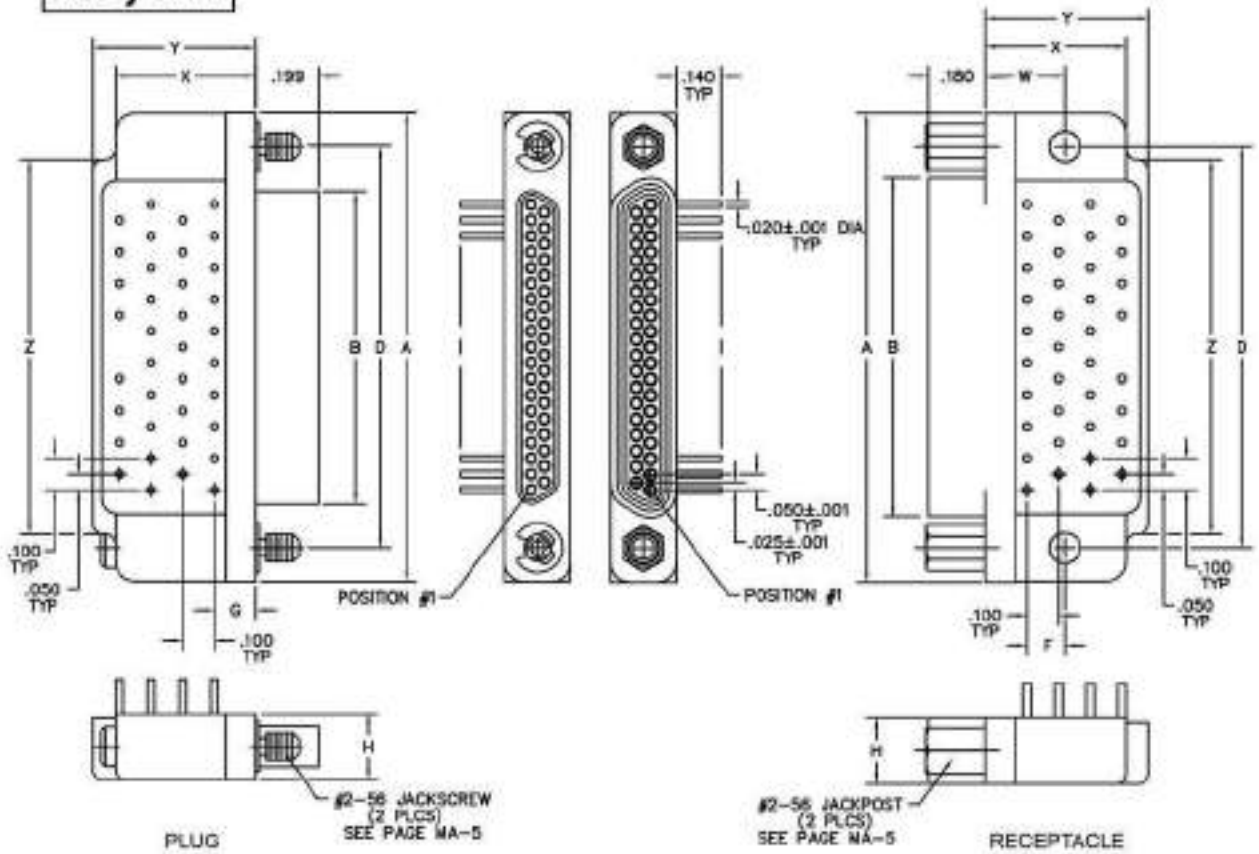

DIMENSIONS														
SIZE	CONTACT ROWS	A	B PLUG MAX	B RCPT MAX	D	F	G	H	W	X MAX	Y MAX	Z	HARDWARE	MOUNTING HOLE
9	2	.778	.292	.378	.565	.020	.230	.208	.250	.420	.420	.775	#2-56 UNC THD	.096 DIA THRU
15		.928	.442	.528	.715	.120	.130					.925		
21		1.078	.592	.678	.865							1.075		
25		1.178	.692	.778	.965							1.175		
31		1.328	.842	.928	1.115					.450	.520	1.080		
37		1.478	.992	1.078	1.265					.450		1.180		
51	3	1.428	.942	1.028	1.215	.150	.150	.250	.300	.425	.650	1.220		

AirBorn

PLUG:	MS–253–037–335–410S
RECEPTACLE:	MS–263–037–445–220S
PLUG:	MR–251–037–335–410S
RECEPTACLE:	MR–261–037–445–220S

XX–XXX–XXX–XXX–XXXX

PLUG	RECEPTACLE
SERIES	
MS .050" Low Profile Metal PC Board Mount Connector	MS .050" Low Profile Metal PC Board Mount Connector
MR .050" Low Profile Plastic PC Board Mount Connector	MR .050" Low Profile Plastic PC Board Mount Connector
(MS & MR mate with MP, MQ, MR, MS receptacles)	(MS & MR mate with MP, MQ, MR, MS plugs)
BODY	
2 2-Row (Sizes 9 thru 37)	2 2-Row (Sizes 9 thru 37)
3 3-Row (Size 51)	3 3-Row (Size 51)
BODY STYLE:	BODY STYLE:
5 Plug, right angle, narrow footprint, w/ mtg holes	6 Receptacle, right angle, narrow footprint, w/ mtg holes
BODY MATERIAL:	BODY MATERIAL:
1 Polyphenylene Sulfide (ML only)	1 Polyphenylene Sulfide (ML only)
2 Electroless nickel shell w/ PPS insulator	2 Electroless nickel shell w/ PPS insulator
3 Electrodeposited cadmium shell w/ PPS insulator ☒	3 Electrodeposited cadmium shell w/ PPS insulator ☒
4 Hard anodized black shell w/ PPS insulator	4 Hard anodized black shell w/ PPS insulator
SIZE	
XXX 009, 015, 021, 025, 031, 037, 051	XXX 009, 015, 021, 025, 031, 037, 051
CONTACTS	
TYPE CONTACTS/TERMINATIONS:	TYPE CONTACTS/TERMINATIONS:
32 Pin, right angle, PCB leads, .109"	43 Socket, right angle, PCB leads, .109"
33 Pin, right angle, PCB leads, .140"	44 Socket, right angle, PCB leads, .140"
34 Pin, right angle, PCB leads, .172"	45 Socket, right angle, PCB leads, .172"
PLATING OPTIONS:	PLATING OPTIONS:
3 50 µ" Au contacts: Au terminations	3 50 µ" Au contacts: Au terminations
5 50 µ" Au contacts: Sn/Pb alloy terminations ☒	5 50 µ" Au contacts: Sn/Pb alloy terminations ☒
7 50 µ" Au contacts: SAC305 terminations	7 50 µ" Au contacts: SAC305 terminations
HARDWARE	
STYLE OF HARDWARE:	STYLE OF HARDWARE:
00 None	00 None
22 Two fixed jacknut assemblies	22 Two fixed jacknut assemblies
41 Two turning jackscrews, allen head, retaining ring	41 Two turning jackscrews, allen head, retaining ring
POLARIZATION / WIRING:	POLARIZATION / WIRING
0R Reversed body polarization	0R Reversed body polarization
0S Standard body polarization	0S Standard body polarization

☒ = Option not RoHS compliant

AirBorn

Recommended PC Board Layout

Right Angle, Narrow Footprint Standard Polarization

CONNECTOR MATING FACE

PC BOARD LAYOUT
COMPONENT SIDE

PLUG
PC BOARD LAYOUT
COMPONENT SIDE

RECEPTACLE
PC BOARD LAYOUT
COMPONENT SIDE

CONNECTOR MATING FACE*
(RECEPTACLE)

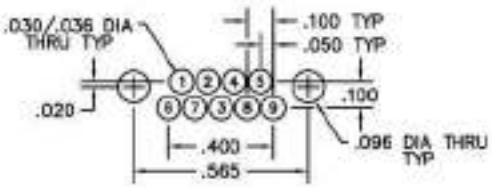

9 POSITION

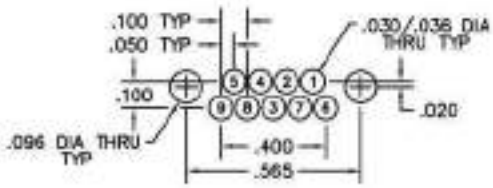

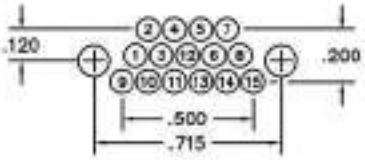

15 POSITION

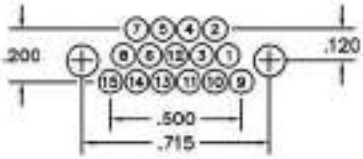

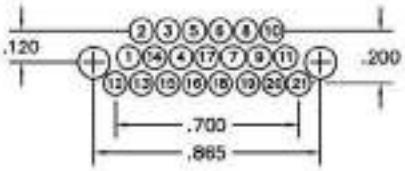

21 POSITION

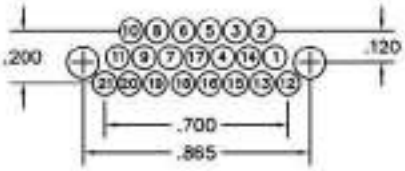

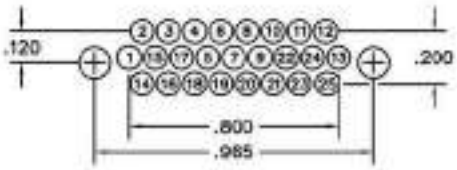

25 POSITION

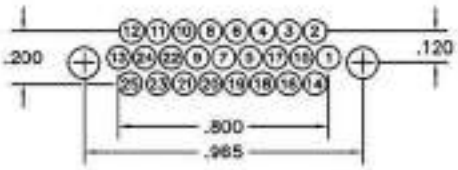

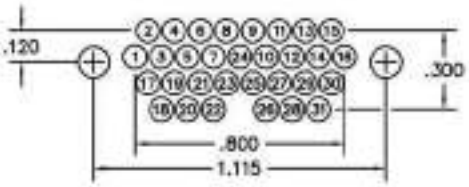

31 POSITION

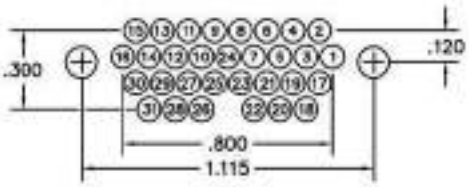

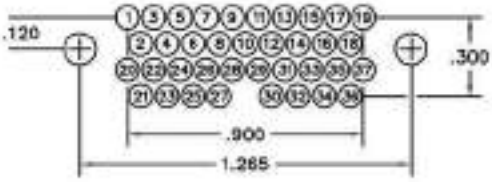

37 POSITION

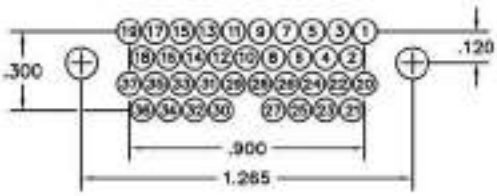

Recommended PC Board Layout

Right Angle, Narrow Footprint
Standard Polarization

CONNECTOR MATING FACE

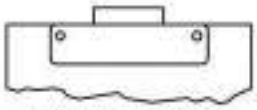

PC BOARD LAYOUT
COMPONENT SIDE

PLUG
PC BOARD LAYOUT
COMPONENT SIDE

RECEPTACLE
PC BOARD LAYOUT
COMPONENT SIDE

CONNECTOR MATING FACE*
(RECEPTACLE)

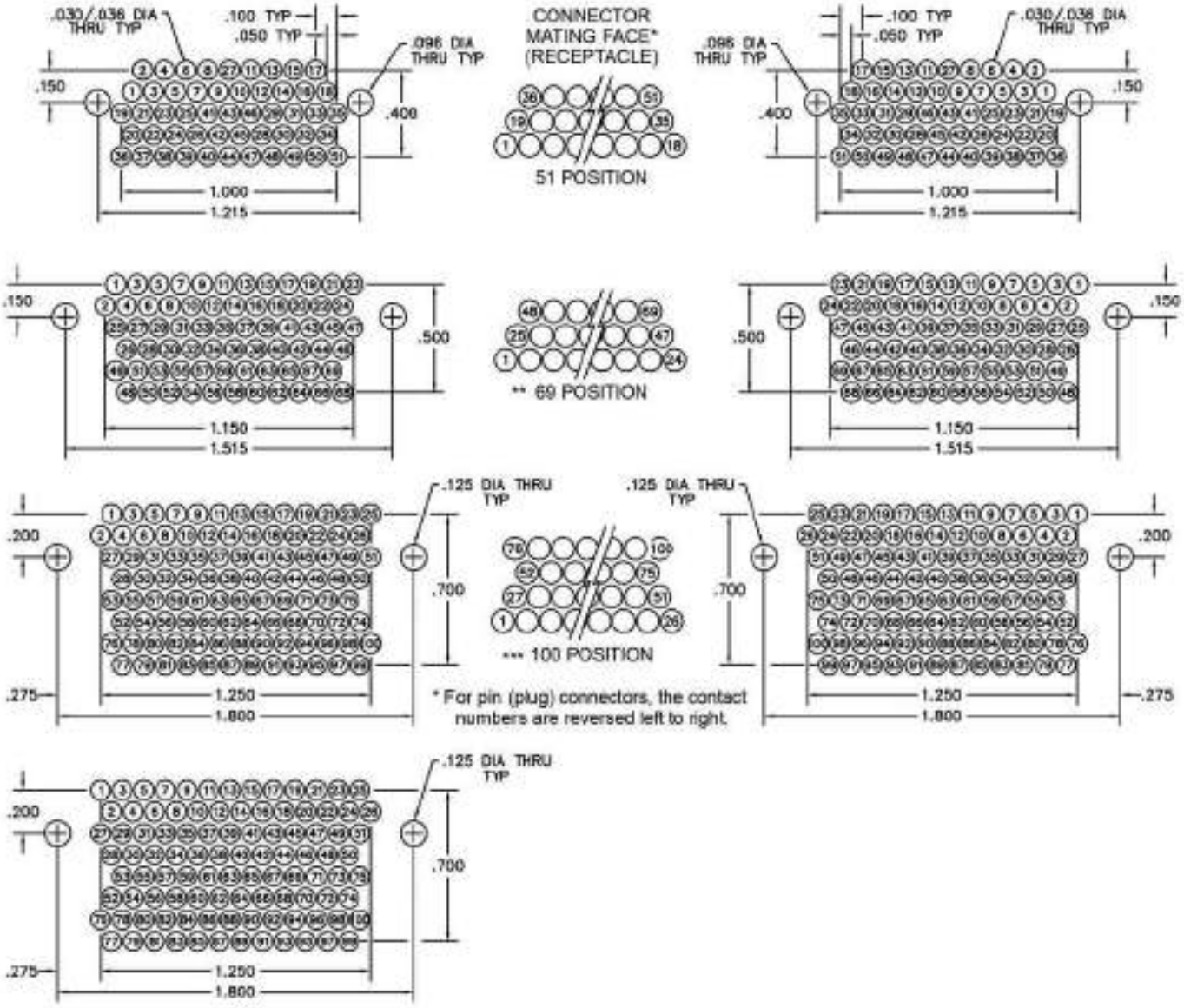

* For pin (plug) connectors, the contact numbers are reversed left to right.

Mil-Spec Footprint
For Mil-Spec footprint, use "Option" -94P

** = 69 and 100 positions not available in low profile (MS, MR)
*** = 100 position not available in thru-cut body style (R, S)

AirBorn

Recommended PC Board Layout

Right Angle, Narrow Footprint
Reverse Polarization

CONNECTOR MATING FACE

PC BOARD LAYOUT
COMPONENT SIDE

PLUG
PC BOARD LAYOUT
COMPONENT SIDE

CONNECTOR
MATING FACE*
(RECEPTACLE)

RECEPTACLE
PC BOARD LAYOUT
COMPONENT SIDE

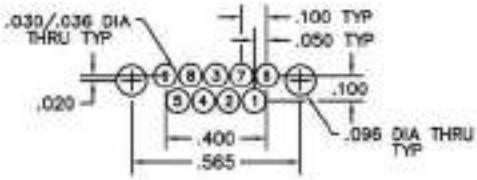

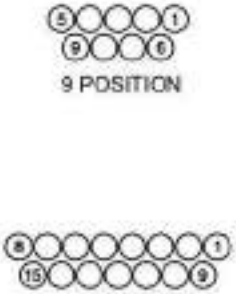

9 POSITION

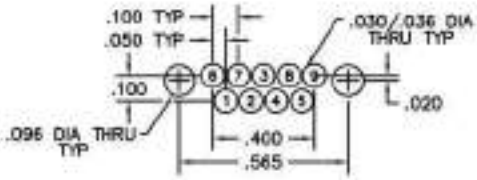

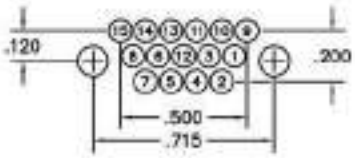

15 POSITION

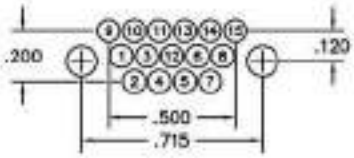

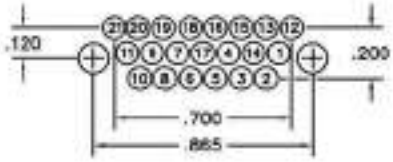

21 POSITION

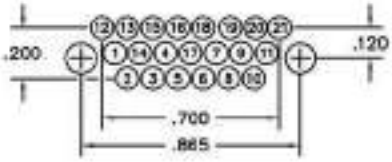

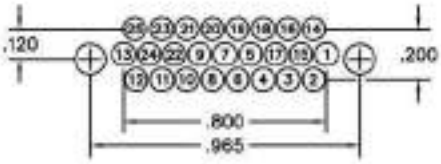

25 POSITION

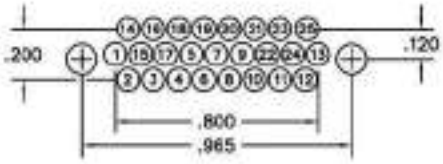

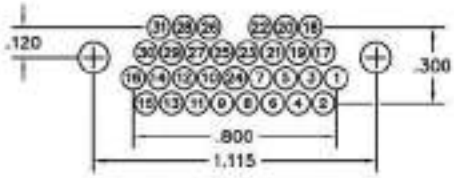

31 POSITION

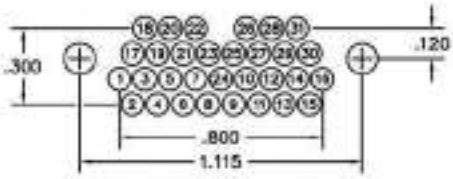

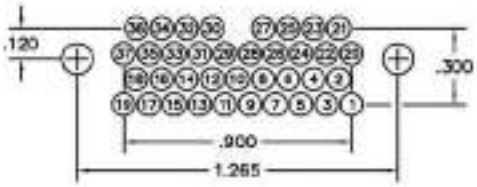

37 POSITION

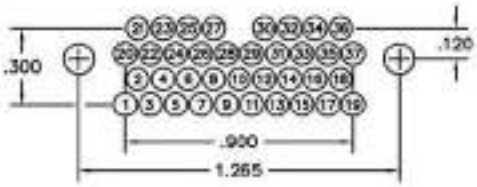

Recommended PC Board Layout

Right Angle, Narrow Footprint
Reverse Polarization

CONNECTOR MATING FACE

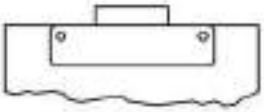

PC BOARD LAYOUT
COMPONENT SIDE

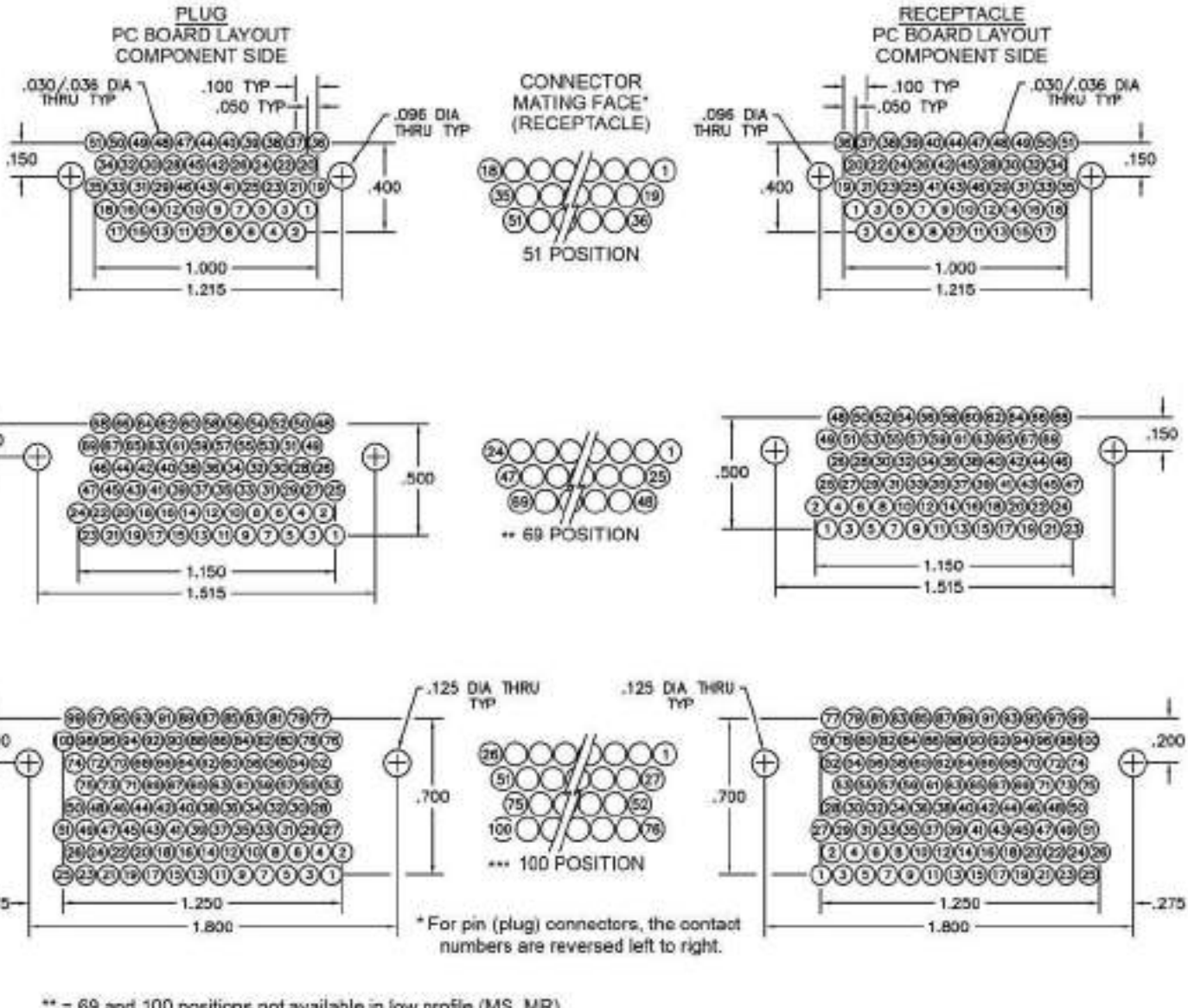

* For pin (plug) connectors, the contact numbers are reversed left to right.

** = 69 and 100 positions not available in low profile (MS, MR)
*** = 100 position not available in thru-cut body style (R, S)

AirBorn

Right Angle Boardmount (Compressed Footprint)

.050"

9 thru 100 Contacts

MK

MK-2P2-031-A35-220S
(PLUG)

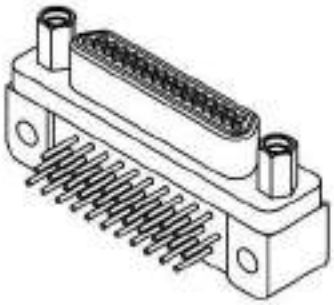

MK-2Q2-031-B45-220S
(RECEPTACLE)

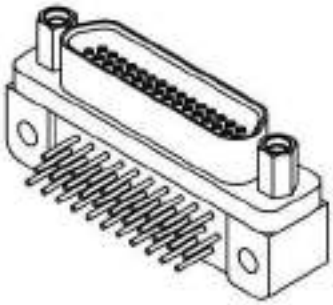

MATING MATRIX	
CONNECTOR	MATES WITH
MK-2P...	MK, ML, MM, MN receptacles
MK-2Q...	MK, ML, MM, MN plugs

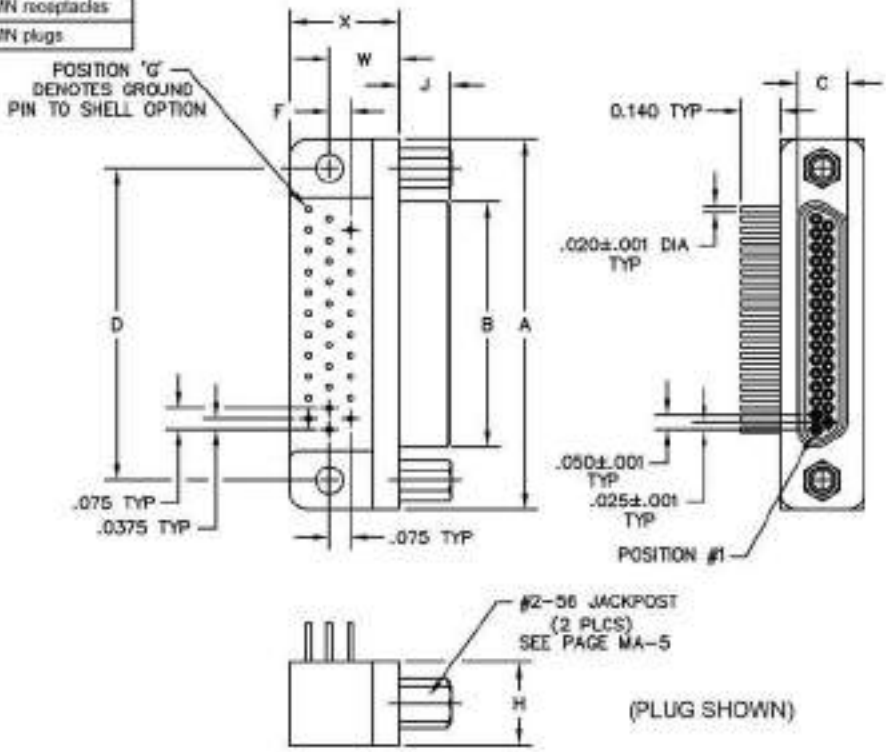

DIMENSIONS															
SIZE	CONTACT ROWS	A	B		C		D	F	H	J		W	X MAX	HARDWARE	MOUNTING HOLE
			PLUG MAX	RCPT MAX	PLUG MAX	RCPT MAX				PLUG	RCPT				
9	2	.775	.334	.400	.185	.251	.565	.0375	.298	.183	.195	.250	.400	#2-56 UNC THD	.096 DIA OR #2-56 UNC THREADED INSERT
15		.925	.484	.550			.715	.075							
21		1.075	.634	.700			.865								
25		1.175	.734	.800			.965								
31		1.325	.884	.950			1.115								
37		1.475	1.034	1.100			1.265								
51	3	1.425	.984	1.050	.228	.294	1.215	.1125	.341			.300	.490		
69		1.725	1.284	1.350			1.515								
100	4	2.160	1.384	1.508	.271	.394	1.600	.1875	.384			.400	.660	#4-40 UNC THD	.125 DIA OR #4-40 UNC THREADED INSERT

AirBorn

PLUG: MK–2P2–031–335–220S
RECEPTACLE: MK–2Q2–031–445–220S

XX–XXX–XXX–XXX–XXXX–XXX

SERIES | BODY | SIZE | CONTACTS | HARDWARE | OPTIONS

PLUG

SERIES

MK .050" Rugged Metal PC Board Mount Connector

BODY

2 2-Row (Sizes 9 thru 37)
3 3-Row (Size 51 & 69)
4 4-Row (Size 100)

BODY STYLE:
P Plug, right angle, compressed footprint

BODY MATERIAL:
2 Electroless nickel shell w/ PPS insulator
3 Electrodeposited cadmium shell w/ PPS insulator ☒
4 Hard anodized black shell w/ PPS insulator
5 Stainless steel shell w/ PPS insulator
A Pure Electro-Deposited Aluminum
K Zinc Nickel Plating
T Nickel Polymer Plating

SIZE

XXX 009, 015, 021, 025, 031, 037, 051, 069, 100

CONTACTS

TYPE CONTACTS/TERMINATIONS:
32 Pin, right angle, PCB leads, .109"
33 Pin, right angle, PCB leads, .140"
34 Pin, right angle, PCB leads, .172"
A2 Pin, right angle, PCB leads, .109", w/ ground pin option
A3 Pin, right angle, PCB leads, .140", w/ ground pin option
A4 Pin, right angle, PCB leads, .172", w/ ground pin option

PLATING OPTIONS:
3 50 µ" Au contacts: Au terminations
5 50 µ" Au contacts: Sn/Pb alloy terminations ☒
7 50 µ" Au contacts: SAC305 terminations

HARDWARE

STYLE OF HARDWARE:
00 None
22 Two fixed jacknuts (62")
99 Keying hardware, see options below

POLARIZATION:
0S Standard body polarization

OPTIONS

0B7 Threaded inserts in mounting holes
KPXX Two fixed jacknuts (KN")

NOTES

See page MA-6 for keying options

RECEPTACLE

SERIES

MK .050" Rugged Metal PC Board Mount Connector

BODY

2 2-Row (Sizes 9 thru 37)
3 3-Row (Size 51 & 69)
4 4-Row (Size 100)

BODY STYLE:
Q Receptacle, right angle, compressed footprint

BODY MATERIAL:
2 Electroless nickel shell w/ PPS insulator
3 Electrodeposited cadmium shell w/ PPS insulator ☒
4 Hard anodized black shell w/ PPS insulator
5 Stainless steel shell w/ PPS insulator
A Pure Electro-Deposited Aluminum
K Zinc Nickel Plating
T Nickel Polymer Plating

SIZE

XXX 009, 015, 021, 025, 031, 037, 051, 069, 100

CONTACTS

TYPE CONTACTS/TERMINATIONS:
43 Socket, right angle, PCB leads, .109"
44 Socket, right angle, PCB leads, .140"
45 Socket, right angle, PCB leads, .172"
B3 Socket, right angle, PCB leads, .109", w/ ground pin option
B4 Socket, right angle, PCB leads, .140", w/ ground pin option
B5 Socket, right angle, PCB leads, .172", w/ ground pin option

PLATING OPTIONS:
3 50 µ" Au contacts: Au terminations
5 50 µ" Au contacts: Sn/Pb alloy terminations ☒
7 50 µ" Au contacts: SAC305 terminations

HARDWARE

STYLE OF HARDWARE:
00 None
22 Two fixed jacknuts (62")
99 Keying hardware, see options below

POLARIZATION:
0S Standard body polarization

OPTIONS

900 Interfacial sealing gasket
0B7 Threaded inserts in mounting holes and interfacial sealing gasket
KPXX Two fixed jacknuts (KN") and interfacial sealing gasket

NOTES

See page MA-6 for keying options

* = Use numbers in parenthesis when ordering size 100.
☒ = Option not RoHS compliant

AirBorn

Recommended PC Board Layout

Right Angle, Compressed Footprint
Standard Polarization

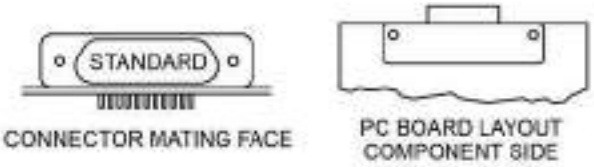

PLUG
PC BOARD LAYOUT
COMPONENT SIDE

CONNECTOR
MATING FACE*
(RECEPTACLE)

RECEPTACLE
PC BOARD LAYOUT
COMPONENT SIDE

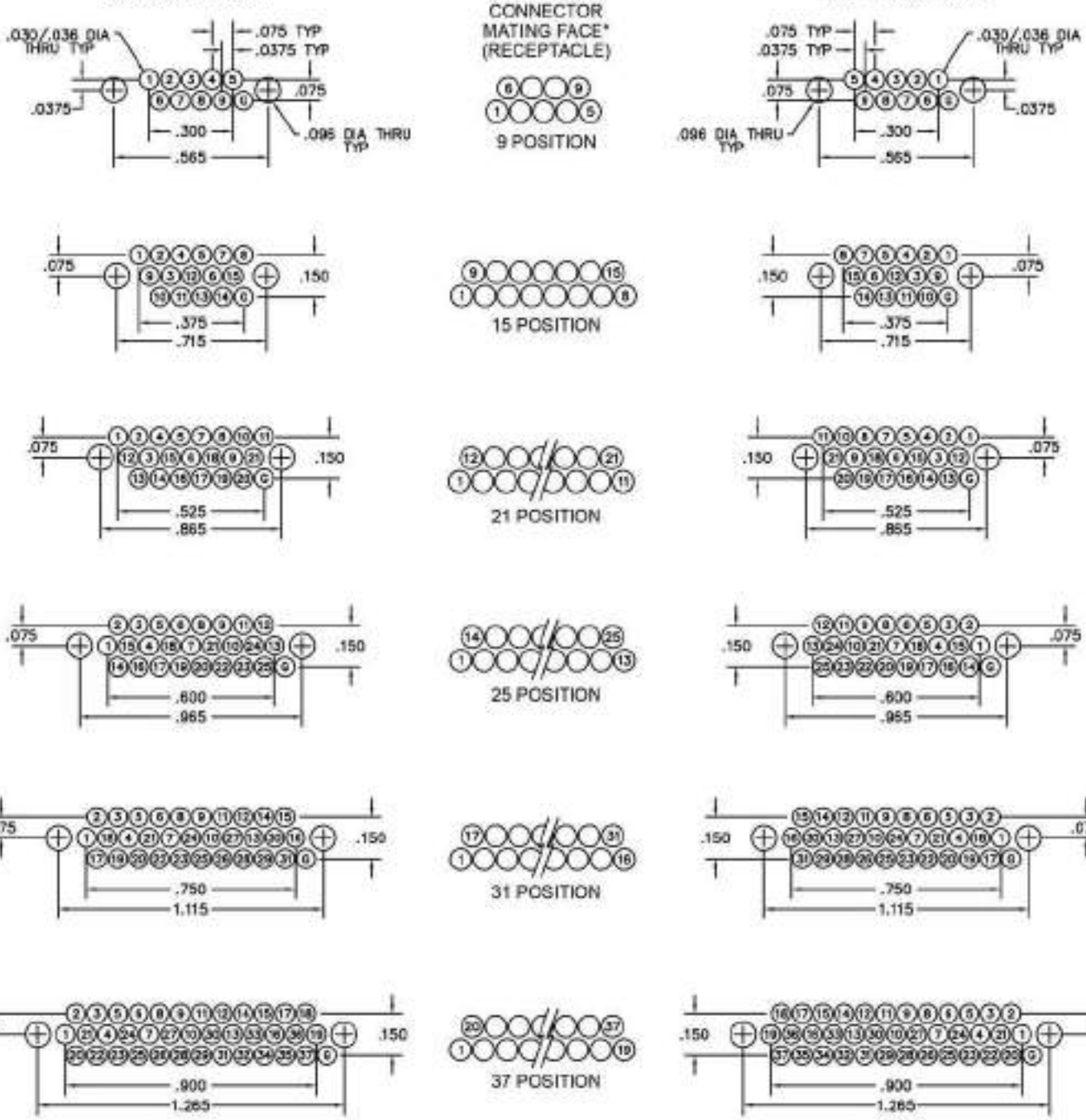

AirBorn

CONNECTOR MATING FACE

PC BOARD LAYOUT
COMPONENT SIDE

Recommended PC Board Layout

Right Angle, Compressed Footprint
Standard Polarization

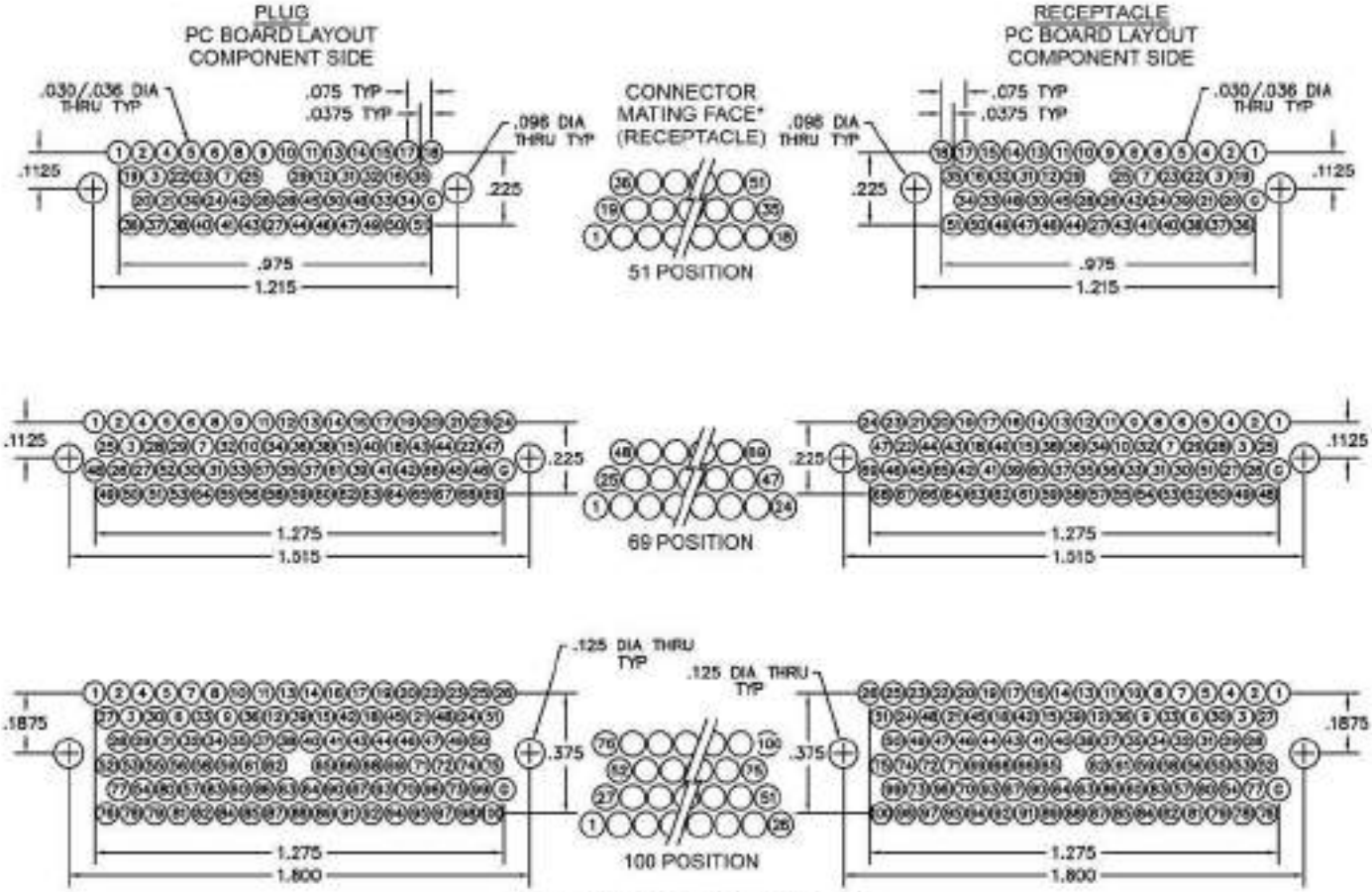

* For pin (plug) connectors, the contact numbers are reversed left to right.

AirBorn

Board (Standard Footprint) to Cable

.050"

9 thru 100 Contacts

Rugged Board Mount

MK, ML

Rugged Cable

MM, MN

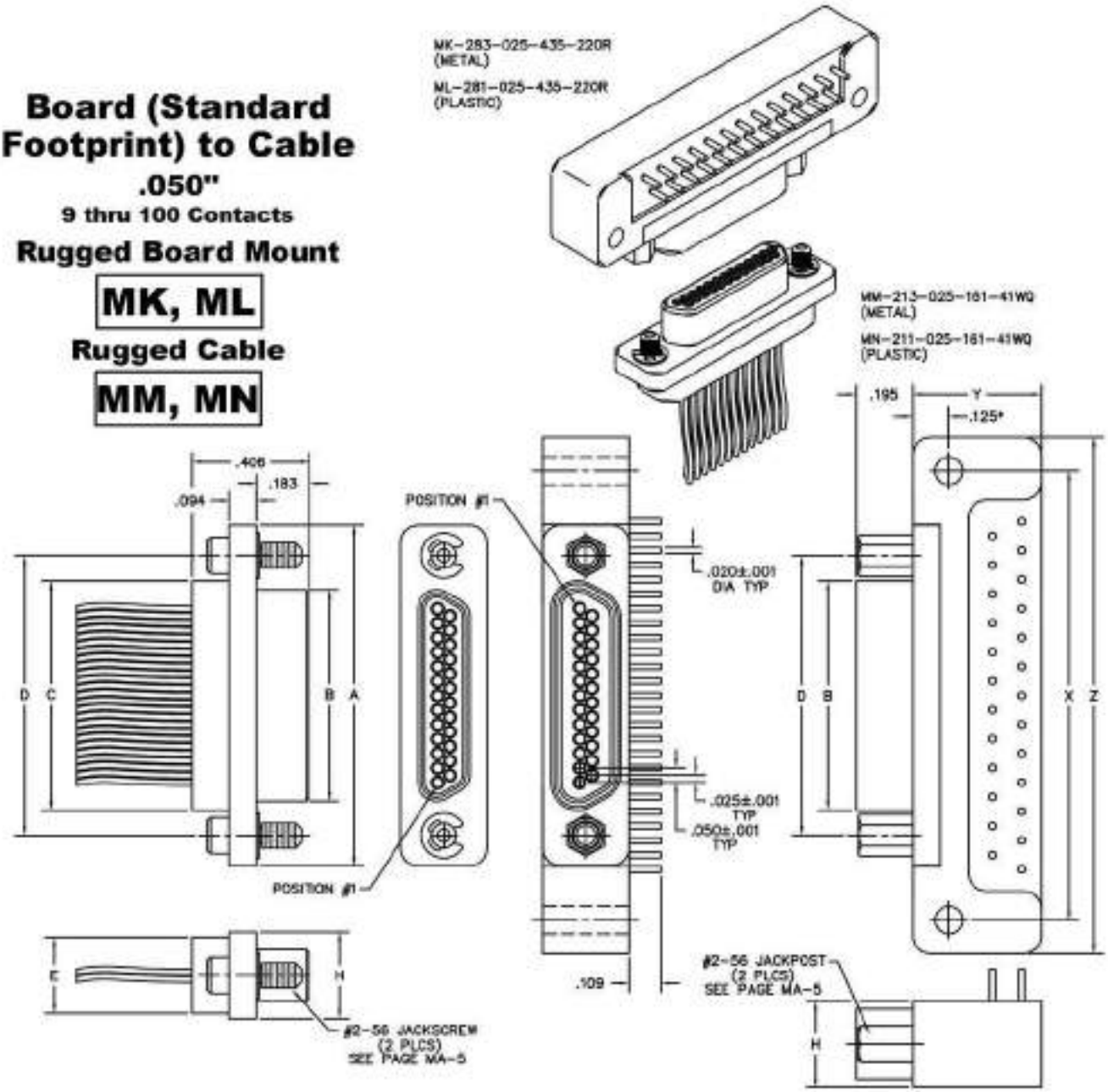

DIMENSIONS													
SIZE	CONTACT ROWS	A	B PLUG MAX	B ROPT MAX	C	D	E POTTING WELL MAX	H	X	Y MAX	Z MAX	HARDWARE	MOUNTING HOLE
9	2	.775	.334	.400	.390	.565	.270	.298	1.150	.455	1.390	#2-56 UNC THD	.086 DIA OR #2-56 UNC THREADED INSERT
15		.925	.484	.550	.540	.715			1.300		1.540		
21		1.075	.634	.700	.690	.865			1.450		1.690		
25		1.175	.734	.800	.790	.965			1.550		1.790		
31		1.325	.884	.950	.940	1.115			1.800		2.040		
37		1.475	1.034	1.100	1.090	1.265			2.100		2.340		
51	3	1.425	.984	1.050	1.040	1.215	.310	.341	1.800	.585	1.875		
100	4	2.160	1.384	1.508	1.432	1.800	.360	.384	2.500	.665**	2.780	#4-40 UNC THD	.125 DIA OR #4-40 UNC THREADED INSERT

* = .225 FOR "-05K" AND "08J" SPECIAL CODES (MIL-SPEC FOOTPRINT FOR 100 POSITION ONLY)
** = .765 MAX FOR "-05K" AND "08J" SPECIAL CODES (MIL-SPEC FOOTPRINT FOR 100 POSITION ONLY)

AirBorn

PLUG: MM–213–025–161–41WQ
RECEPTACLE: MK–283–025–435–220R
PLUG: MN–211–025–161–41WQ
RECEPTACLE: ML–281–025–435–220R

XX–XXX–XXX–XXX–XXXX–XXX

PLUG	RECEPTACLE
SERIES	
MM .050" Rugged Metal I/O Connector MN .050" Rugged Plastic I/O Connector (MM & MN mate with MK, ML, MM, MN receptacles)	MK .050" Rugged Metal PC Board Mount Connector ML .050" Rugged Plastic PC Board Mount Connector (MK & ML mate with MK, ML, MM, MN plugs)
BODY	
2 2-Row (Sizes 9 thru 37) 3 3-Row (Size 51) 4 4-Row (Size 100)	2 2-Row (Sizes 9 thru 37) 3 3-Row (Size 51) 4 4-Row (Size 100)
BODY STYLE: 1 Plug, straight, with ears	BODY STYLE: 8 Receptacle, right angle, standard footprint, w/ mtg holes
BODY MATERIAL: 1 Polyphenylene Sulfide (MN only) 2 Polyphenylene Sulfide with electroless nickel shell 3 Polyphenylene Sulfide with electrodeposited cadmium shell ☒ 4 Polyphenylene Sulfide with hard anodized black shell 5 Polyphenylene Sulfide with stainless steel shell A Pure Electro-Deposited Aluminum K Zinc Nickel Plating T Nickel Polymer Plating	BODY MATERIAL: 1 Polyphenylene Sulfide (ML only) 2 Polyphenylene Sulfide with electroless nickel shell 3 Polyphenylene Sulfide with electrodeposited cadmium shell ☒ 4 Polyphenylene Sulfide with hard anodized black shell 5 Polyphenylene Sulfide with stainless steel shell A Pure Electro-Deposited Aluminum K Zinc Nickel Plating T Nickel Polymer Plating
SIZE	
XXX 009, 015, 021, 025, 031, 037, 051, 100	XXX 009, 015, 021, 025, 031, 037, 051, 100
CONTACTS	
TYPE CONTACTS/TERMINATIONS: 11 Pin, straight, solder cup 14 Pin, straight, .500" pigtails (.018 dia) 15 Pin, straight, 1.000" pigtails (.018 dia) 16 Pin, straight, crimped wire	TYPE CONTACTS/TERMINATIONS: 43 Socket, right angle, PCB leads, .109" 44 Socket, right angle, PCB leads, .140" 45 Socket, right angle, PCB leads, .172"
PLATING OPTIONS: 1 50 µ" Au contacts (crimp wire) 3 50 µ" Au contacts; 10 µ" Au terminations (solder cup, pigtail) 5 50 µ" Au contacts; Sn/Pb alloy terminations (pigtail) ☒ 7 50 µ" Au contacts; SAC305 terminations (pigtail)	PLATING OPTIONS: 3 50 µ" Au contacts; 10 µ" Au terminations 5 50 µ" Au contacts; Sn/Pb alloy terminations ☒ 7 50 µ" Au contacts; SAC305 terminations
HARDWARE	
STYLE OF HARDWARE: 00 None 22 Two fixed jacknut assemblies (62*) 41 Two turning jackscrews, allen head, retaining ring (81*) 42 Two long turning jackscrews, allen head, retaining ring (82*) 43 Two turning jackscrews, slot head, retaining ring (83*) 44 Two long turning jackscrews, slot head, retaining ring (84*) 45 Two turning jackscrews, allen head, captivated** (85*) 99 Keying hardware, see options below (Body material 2, 3 and 4 only)	STYLE OF HARDWARE: 00 None 22 Two fixed jacknut assemblies (62*) 99 Keying hardware, see options below (Body material 2, 3 and 4 only)
POLARIZATION / WIRING: 00 None XX For wiring codes, see page MA-3 & MA-4	POLARIZATION / WIRING 0R Reversed body polarization
OPTIONS	
KSXX Two turning jackscrews. See page MA-6 for keying options (KJ*)	KPXX Two fixed jacknuts and interfacial sealing gasket. See page MA-6 for keying options (KN*) 900 Interfacial sealing gasket 05K Mil-Spec footprint (size 100 only) 0B7 Threaded inserts and interfacial sealing gasket 0BJ Mil-Spec footprint (size 100 only) with threaded inserts and interfacial sealing gasket x

* = Use numbers or letters in parenthesis when ordering size 100.
** = Captive hardware is factory installed and non-removable.
☒ = Option not RoHS compliant

AirBorn

Board (Standard Footprint) to Cable

.050"

9 thru 100 Contacts

Rugged Board Mount

MK, ML

Rugged Cable

MM, MN

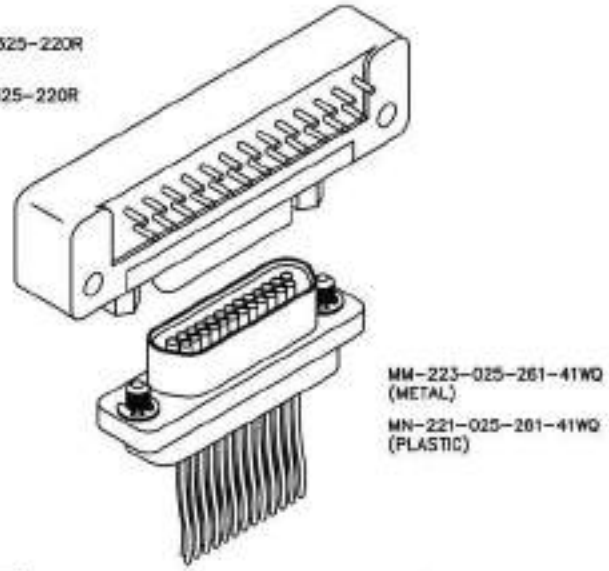

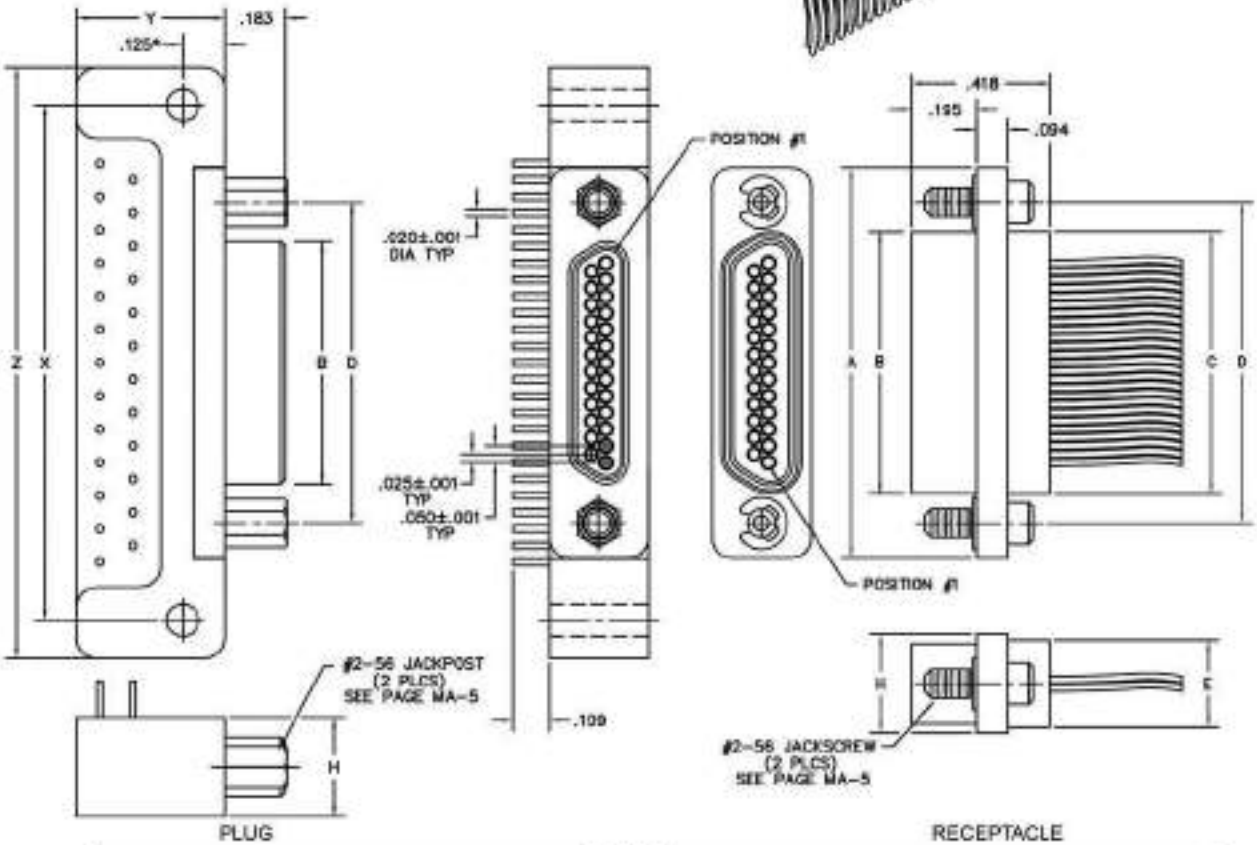

DIMENSIONS													
SIZE	CONTACT ROWS	A	B PLUG MAX	B RCPT MAX	C	D	E POTTING WELL MAX	H	X	Y MAX	Z MAX	HARDWARE	MOUNTING HOLE
9	2	.775	.334	.400	.390	.565	.270	.298	1.150	.455	1.390	#2-56 UNC THD	.096 DIA OR #2-56 UNC THREADED INSERT
15		.925	.484	.550	.540	.715			1.300		1.540		
21		1.075	.634	.700	.690	.865			1.450		1.690		
25		1.175	.734	.800	.790	.965			1.550		1.790		
31		1.325	.884	.950	.940	1.115			1.800		2.040		
37		1.475	1.034	1.100	1.090	1.265			2.100		2.340		
51	3	1.425	.984	1.050	1.040	1.215	.310	.341	1.600	.565	1.875		
100	4	2.160	1.384	1.508	1.432	1.800	.360	.384	2.500	.665**	2.780	#4-40 UNC THD	.125 DIA OR #4-40 UNC THREADED INSERT

* = .225 FOR "-05K" AND "0BJ" SPECIAL CODES (MIL-SPEC FOOTPRINT FOR 100 POSITION ONLY)
** = .765 MAX FOR "-05K" AND "0BJ" SPECIAL CODES (MIL-SPEC FOOTPRINT FOR 100 POSITION ONLY)

AirBorn

PLUG:	MK–273–025–325–220R
RECEPTACLE:	MM–223–025–261–41WQ
PLUG:	ML–271–025–325–220R
RECEPTACLE:	MN 221 025 261 41WQ

XX–XXX–XXX–XXX–XXXX–XXX

PLUG	RECEPTACLE
SERIES	
MK .050" Rugged Metal PC Board Mount Connector ML .050" Rugged Plastic PC Board Mount Connector (MK & ML mate with MK, ML, MM, MN receptacles)	MM .050" Rugged Metal I/O Connector MN .050" Rugged Plastic I/O Connector (MM & MN mate with MK, ML, MM, MN plugs)
BODY	
2 2-Row (Sizes 9 thru 37) 3 3-Row (Size 51) 4 4-Row (Size 100)	2 2-Row (Sizes 9 thru 37) 3 3-Row (Size 51) 4 4-Row (Size 100)
BODY STYLE: 7 Plug, right angle, standard footprint, w/ mtg holes	BODY STYLE: 2 Receptacle, straight, with ears
BODY MATERIAL: 1 Polyphenylene Sulfide (ML only) 2 Polyphenylene Sulfide with electroless nickel shell 3 Polyphenylene Sulfide with electrodeposited cadmium shell ☒ 4 Polyphenylene Sulfide with hard anodized black shell 5 Polyphenylene Sulfide with stainless steel shell A Pure Electro-Deposited Aluminum K Zinc Nickel Plating T Nickel Polymer Plating	BODY MATERIAL: 1 Polyphenylene Sulfide (MN only) 2 Polyphenylene Sulfide with electroless nickel shell 3 Polyphenylene Sulfide with electrodeposited cadmium shell ☒ 4 Polyphenylene Sulfide with hard anodized black shell 5 Polyphenylene Sulfide with stainless steel shell A Pure Electro-Deposited Aluminum K Zinc Nickel Plating T Nickel Polymer Plating
SIZE	
XXX 009, 015, 021, 025, 031, 037, 051, 100	XXX 009, 015, 021, 025, 031, 037, 051, 100
CONTACTS	
TYPE CONTACTS/TERMINATIONS: 32 Pin, right angle, PCB leads, .100" 33 Pin, right angle, PCB leads, .140" 34 Pin, right angle, PCB leads, .172"	TYPE CONTACTS/TERMINATIONS: 21 Socket, straight, solder cup 24 Socket, straight, .500" pigtails (.018 dia) 25 Socket, straight, 1.000" pigtails (.018 dia) 26 Socket, straight, crimped wire
PLATING OPTIONS: 3 50 µ" Au contacts; 10 µ" Au terminations 5 50 µ" Au contacts; Sn/Pb alloy terminations ☒ 7 50 µ" Au contacts; SAC305 terminations	PLATING OPTIONS: 1 50 µ" Au contacts (crimp wire) 3 50 µ" Au contacts; 10 µ" Au terminations (solder cup, pigtail) 5 50 µ" Au contacts; Sn/Pb alloy terminations (pigtail) ☒ 7 50 µ" Au contacts; SAC305 terminations (pigtail)
HARDWARE	
STYLE OF HARDWARE: 00 None 22 Two fixed jacknut assemblies (62*) 99 Keying hardware, see options below (Body material 2, 3 and 4 only)	STYLE OF HARDWARE: 00 None 22 Two fixed jacknut assemblies (62*) 41 Two turning jackscrews, allen head, retaining ring (81*) 42 Two long turning jackscrews, allen head, retaining ring (82*) 43 Two turning jackscrews, slot head, retaining ring (83*) 44 Two long turning jackscrews, slot head, retaining ring (84*) 45 Two turning jackscrews, allen head, captivated** (85*) 99 Keying hardware, see options below (Body material 2, 3 and 4 only)
POLARIZATION / WIRING: 0R Reversed body polarization	POLARIZATION / WIRING 00 None XX For wiring codes, see page MA-3 & MA-4
OPTIONS	
KPXX Two fixed jacknuts. See page MA-6 for keying options (KN*) 05K Mil-Spec footprint (size 100 only) 0B7 Threaded inserts 0BJ Mil-Spec footprint (size 100 only) with threaded inserts	KSXX Two turning jackscrews and interfacial sealing gasket. See page MA-6 for keying options (KJ*) 900 Interfacial sealing gasket

* = Use numbers or letters in parenthesis when ordering size 100.
** = Captive hardware is factory installed and non-removable.
☒ = Option not RoHS compliant

AirBorn

Recommended PC Board Layout

Right Angle, Standard Footprint
Reverse Polarization

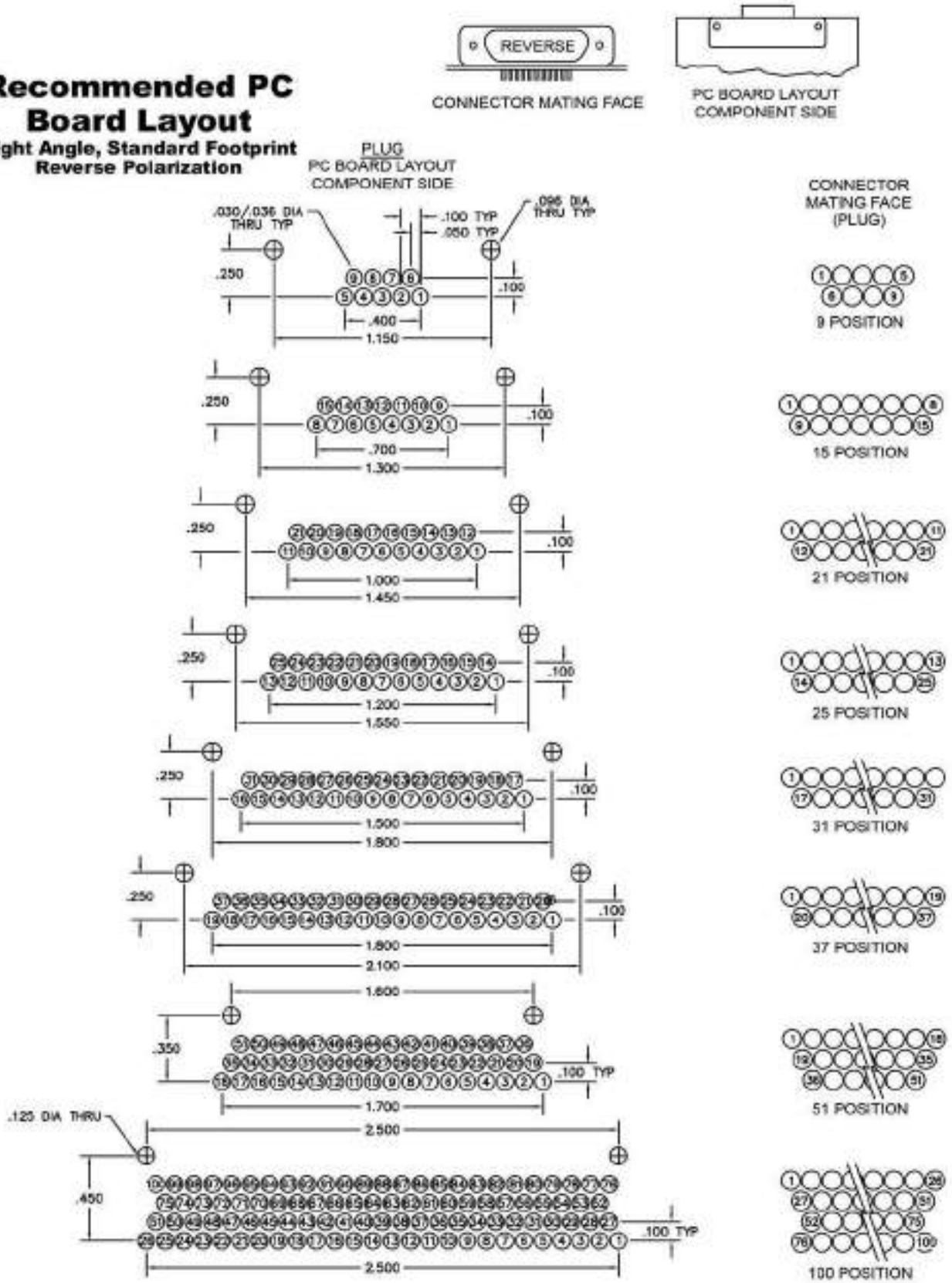

AirBorn

CONNECTOR MATING FACE

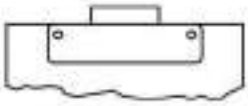

PC BOARD LAYOUT
COMPONENT SIDE

Recommended PC Board Layout

Right Angle, Standard Footprint
Reverse Polarization

CONNECTOR MATING FACE (RECEPTACLE)

RECEPTACLE PC BOARD LAYOUT COMPONENT SIDE

9 POSITION

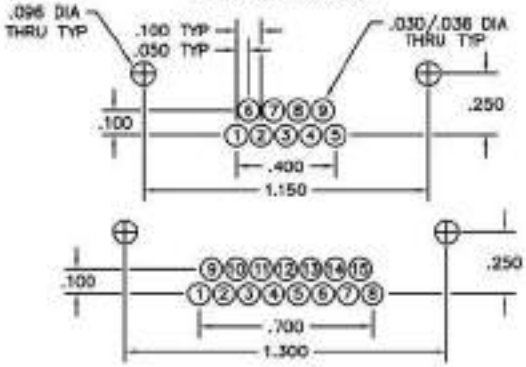

15 POSITION

21 POSITION

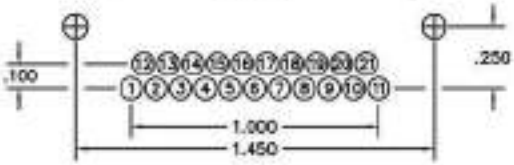

25 POSITION

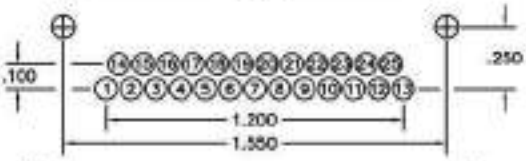

31 POSITION

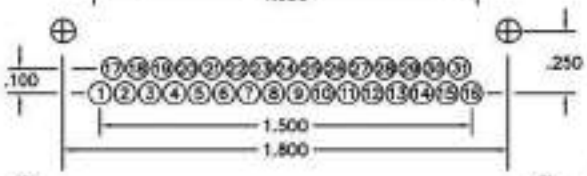

37 POSITION

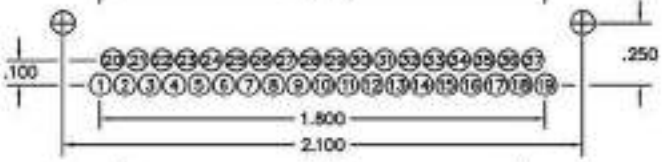

51 POSITION

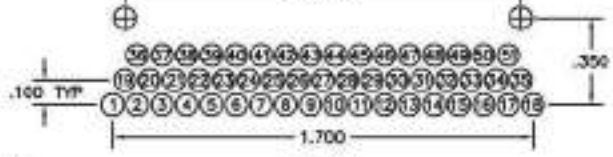

100 POSITION

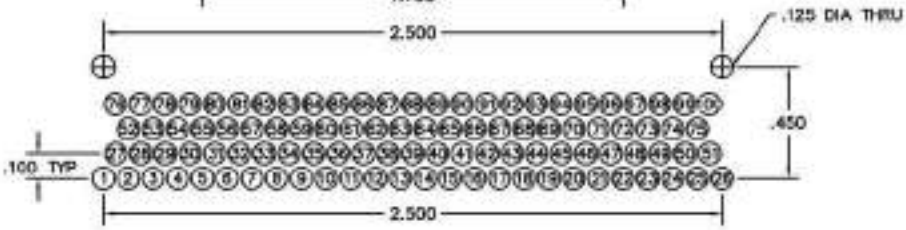

AirBorn

Cable to Board (Narrow Footprint)

.050"

9 thru 100 Contacts

Rugged Cable

MM, MN

Rugged Board Mount

MK, ML

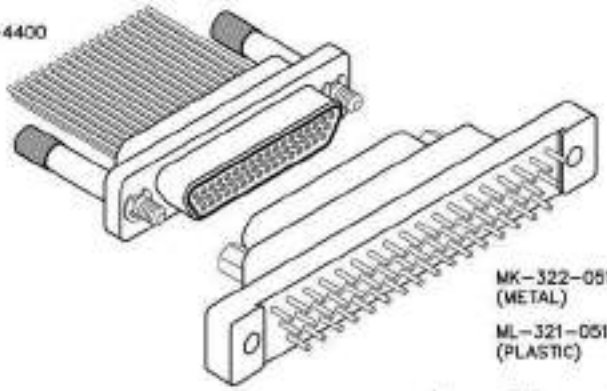

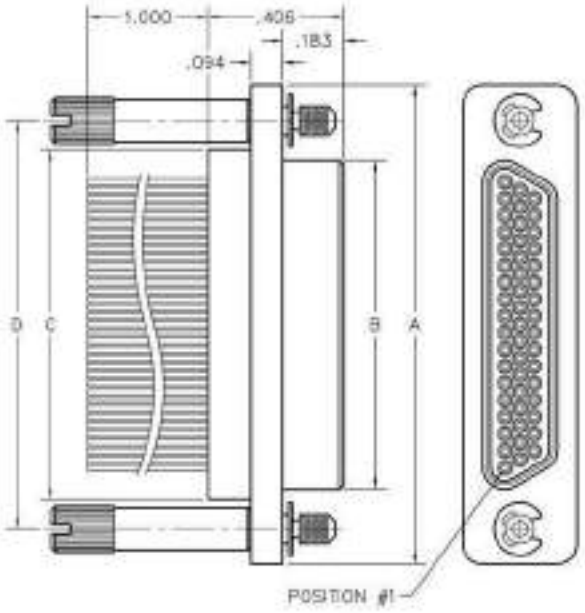

PLUG

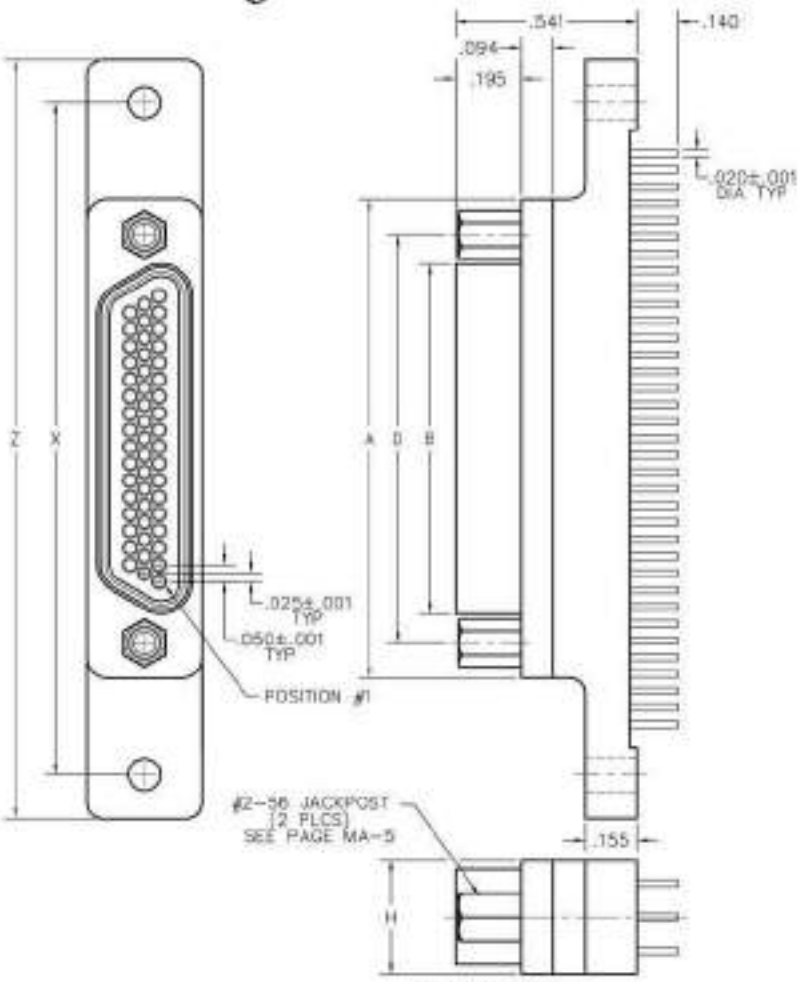

RECEPTACLE

DIMENSIONS													
SIZE	CONTACT ROWS	A	B PLUG MAX	B RCPT MAX	C	D	E POTTING WELL MAX	H	X	Z MAX	HARDWARE	MOUNTING HOLE
9	2	.775	.334	.400	.390	.565	.270	.298	1.150	1.390	#2-56 UNC THD (.092 DIA THRU)	.096 DIA OR #2-56 UNC THREADED INSERT
15		.925	.484	.550	.540	.715						
21		1.075	.634	.700	.690	.865			1.450	1.690		
25		1.175	.734	.800	.790	.965			1.500	1.740		
31		1.325	.884	.950	.940	1.115			1.800	2.040		
37		1.475	1.034	1.100	1.090	1.265			2.100	2.340		
51	3	1.425	.984	1.050	1.040	1.215	.310	.341	2.000	2.270		
100	4	2.160	1.384	1.508	1.432	1.800	.360	.384	2.800	3.240	#4-40 UNC THD (.147 DIA THRU)	.125 DIA OR #2-56 UNC THREADED INSERT

www.airborn.com
(512) 863-5585

AirBorn

PLUG: MM–312–051–153–4400
RECEPTACLE: MK–322–051–235–2200
PLUG: MN–311–051–153–4400
RECEPTACLE: ML–321–051–235–2200

XX–XXX–XXX–XXX–XXXX–XXX

PLUG	RECEPTACLE
SERIES	
MM .050" Rugged Metal I/O Connector MN .050" Rugged Plastic I/O Connector (MM & MN mate with MK, ML, MM, MN receptacles)	MK .050" Rugged Metal PC Board Mount Connector ML .050" Rugged Plastic PC Board Mount Connector (MK & ML mate with MK, ML, MM, MN plugs)
BODY	
2 2-Row (Sizes 9 thru 37) 3 3-Row (Size 51) 4 4-Row (Size 100)	2 2-Row (Sizes 9 thru 37) 3 3-Row (Size 51) 4 4-Row (Size 100)
BODY STYLE: 1 Plug, straight, with ears	BODY STYLE: 2 Receptacle, straight, narrow footprint, w/ mtg holes
BODY MATERIAL: 1 Polyphenylene Sulfide (MN only) 2 Polyphenylene Sulfide with electroless nickel shell 3 Polyphenylene Sulfide with electrodeposited cadmium shell ☒ 4 Polyphenylene Sulfide with hard anodized black shell 5 Polyphenylene Sulfide with stainless steel shell A Pure Electro-Deposited Aluminum K Zinc Nickel Plating T Nickel Polymer Plating	BODY MATERIAL: 1 Polyphenylene Sulfide (ML only) 2 Polyphenylene Sulfide with electroless nickel shell 3 Polyphenylene Sulfide with electrodeposited cadmium shell ☒ 4 Polyphenylene Sulfide with hard anodized black shell 5 Polyphenylene Sulfide with stainless steel shell A Pure Electro-Deposited Aluminum K Zinc Nickel Plating T Nickel Polymer Plating
SIZE	
XXX 009, 015, 021, 025, 031, 037, 051, 100	XXX 009, 015, 021, 025, 031, 037, 051, 100
CONTACTS	
TYPE CONTACTS/TERMINATIONS: 11 Pin, straight, solder cup 14 Pin, straight, .500" pigtails (.015 dia) 15 Pin, straight, 1.000" pigtails (.018 dia) 16 Pin, straight, crimped wire	TYPE CONTACTS/TERMINATIONS: 22 Socket, straight, PCB leads, .109" 23 Socket, straight, PCB leads, .140" 24 Socket, straight, PCB leads, .172"
PLATING OPTIONS: 1 50 µ" Au contacts (crimp wire) 3 50 µ" Au contacts; 10 µ" Au terminations (solder cup, pigtail) 5 50 µ" Au contacts; Sn/Pb alloy terminations (pigtail) ☒ 7 50 µ" Au contacts; SAC305 terminations (pigtail)	PLATING OPTIONS: 3 50 µ" Au contacts; 10 µ" Au terminations 5 50 µ" Au contacts; Sn/Pb alloy terminations ☒ 7 50 µ" Au contacts; SAC305 terminations
HARDWARE	
STYLE OF HARDWARE: 00 None 22 Two fixed jacknut assemblies (62*) 41 Two turning jackscrews, allen head, retaining ring (81*) 42 Two long turning jackscrews, allen head, retaining ring (82*) 43 Two turning jackscrews, slot head, retaining ring (83*) 44 Two long turning jackscrews, slot head, retaining ring (84*) 45 Two turning jackscrews, allen head, captivated** (85*) 99 Keying hardware, see options below (Body material 2, 3 and 4 only)	STYLE OF HARDWARE: 00 None 22 Two fixed jacknut assemblies (62*) 99 Keying hardware, see options below (Body material 2, 3 and 4 only)
POLARIZATION / WIRING: 00 None XX For wiring codes, see page MA-3 & MA-4	POLARIZATION / WIRING 00 None
OPTIONS	
KSXX Two turning jackscrews. See page MA-6 for keying options (KJ*)	KPXX Two fixed jacknuts and interfacial sealing gasket. See page MA-6 for keying options (KN*) 900 Interfacial sealing gasket 0B7 Threaded inserts and interfacial sealing gasket

* = Use numbers or letters in parenthesis when ordering size 100.
** = Captive hardware is factory installed and non-removable.
☒ = Option not RoHS compliant

AirBorn

Cable to Board (Narrow Footprint)

.050"

9 thru 100 Contacts

Rugged Cable **MM, MN**

Rugged Board Mount **MK, ML**

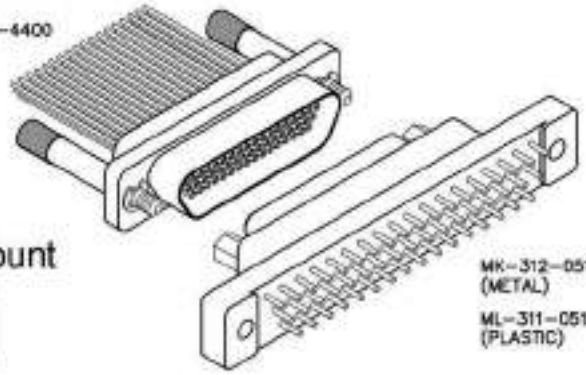

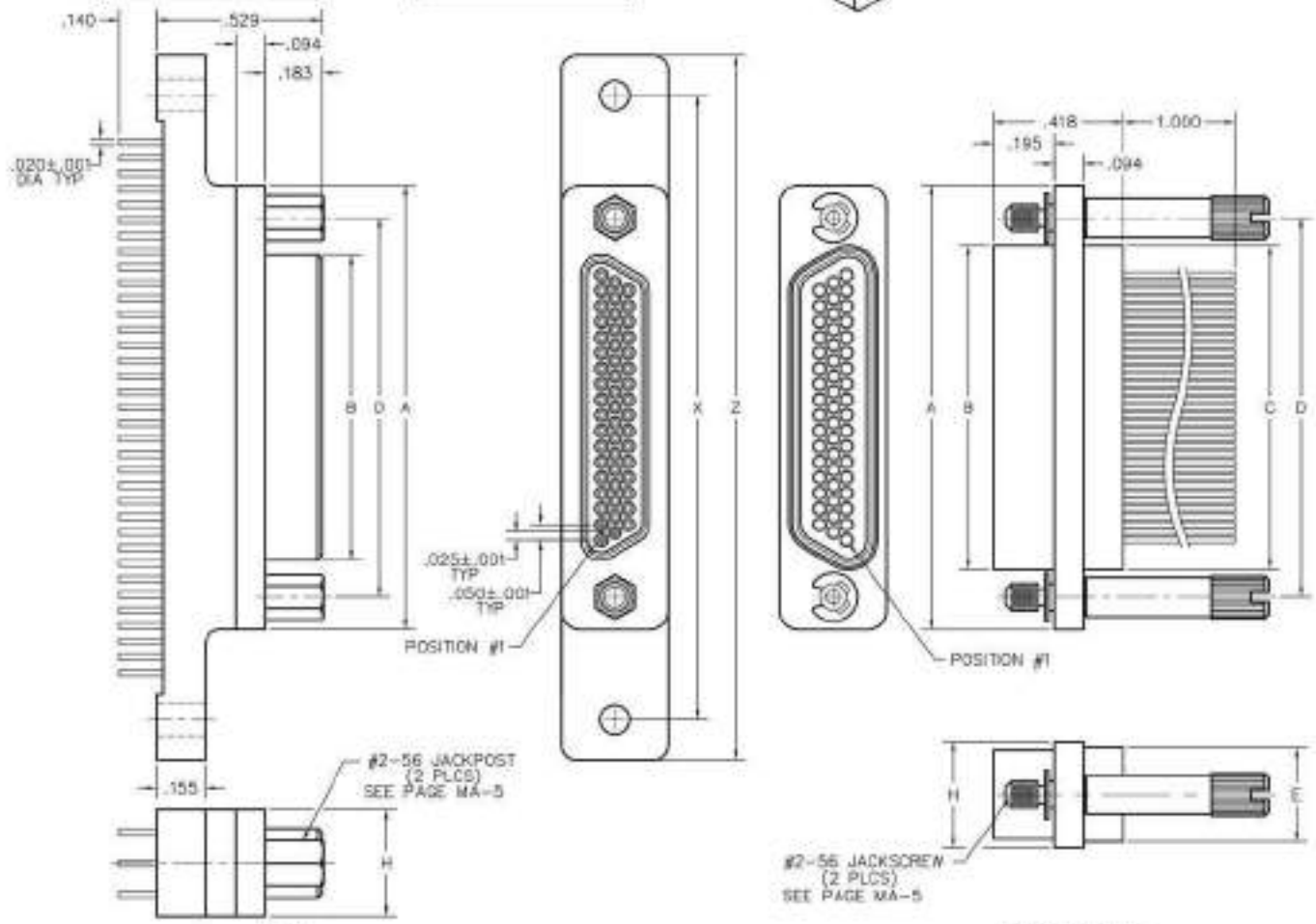

PLUG

RECEPTACLE

DIMENSIONS												
SIZE	CONTACT ROWS	A	B PLUG MAX	B RCPT MAX	C	D	E POTTING WELL MAX	H	X	Z MAX	HARDWARE	MOUNTING HOLE
9	2	.775	.334	.400	.390	.565	.270	.298	1.150	1.390	#2-56 UNC THD	.096 DIA OR #2-56 UNC THREADED INSERT
15		.925	.484	.550	.540	.715			1.150	1.390		
21		1.075	.634	.700	.690	.865			1.450	1.690		
25		1.175	.734	.800	.790	.965			1.500	1.740		
31		1.325	.884	.950	.940	1.115			1.800	2.040		
37		1.475	1.034	1.100	1.090	1.265			2.100	2.340		
51	3	1.425	.984	1.050	1.040	1.215	.310	.341	2.000	2.270		
100	4	2.160	1.384	1.508	1.432	1.800	.360	.384	2.800	3.240	#4-40 UNC THD	.125 DIA OR #2-56 UNC THREADED INSERT

AirBorn

PLUG:	MK–312–051–135–2200
RECEPTACLE:	MN–322–051–253–4400
PLUG:	ML–311–051–135–2200
RECEPTACLE:	MN–321–051–253–4400

XX–XXX–XXX–XXX–XXXX–XXX

PLUG	RECEPTACLE
SERIES	
MK .050" Rugged Metal PC Board Mount Connector ML .050" Rugged Plastic PC Board Mount Connector (MK & ML mate with MK, ML, MM, MN receptacles)	MM .050" Rugged Metal I/O Connector MN .050" Rugged Plastic I/O Connector (MM & MN mate with MK, ML, MM, MN plugs)
BODY	
2 2-Row (Sizes 9 thru 37) 3 3-Row (Size 51) 4 4-Row (Size 100)	2 2-Row (Sizes 9 thru 37) 3 3-Row (Size 51) 4 4-Row (Size 100)
BODY STYLE: 1 Plug, straight, narrow footprint, w/ mtg holes	BODY STYLE: 2 Receptacle, straight, with ears
BODY MATERIAL: 1 Polyphenylene Sulfide (ML only) 2 Polyphenylene Sulfide with electroless nickel shell 3 Polyphenylene Sulfide with electrodeposited cadmium shell ☒ 4 Polyphenylene Sulfide with hard anodized black shell 5 Polyphenylene Sulfide with stainless steel shell A Pure Electro-Deposited Aluminum K Zinc Nickel Plating T Nickel Polymer Plating	BODY MATERIAL: 1 Polyphenylene Sulfide (MN only) 2 Polyphenylene Sulfide with electroless nickel shell 3 Polyphenylene Sulfide with electrodeposited cadmium shell ☒ 4 Polyphenylene Sulfide with hard anodized black shell 5 Polyphenylene Sulfide with stainless steel shell A Pure Electro-Deposited Aluminum K Zinc Nickel Plating T Nickel Polymer Plating
SIZE	
XXX 009, 015, 021, 025, 031, 037, 051, 100	XXX 009, 015, 021, 025, 031, 037, 051, 100
CONTACTS	
TYPE CONTACTS/TERMINATIONS: 12 Pin, straight, PCB leads, .109" 13 Pin, straight, PCB leads, .140" 14 Pin, straight, PCB leads, .172"	TYPE CONTACTS/TERMINATIONS: 21 Socket, straight, solder cup 24 Socket, straight, .500" pigtails (.018 dia) 25 Socket, straight, 1.000" pigtails (.018 dia) 26 Socket, straight, crimped wire
PLATING OPTIONS: 3 50 µ" Au contacts; 10 µ" Au terminations 5 50 µ" Au contacts; Sn/Pb alloy terminations ☒ 7 50 µ" Au contacts; SAC305 terminations	PLATING OPTIONS: 1 50 µ" Au contacts (crimp wire) 3 50 µ" Au contacts; 10 µ" Au terminations (solder cup, pigtail) 5 50 µ" Au contacts; Sn/Pb alloy terminations (pigtail) ☒ 7 50 µ" Au contacts; SAC305 terminations (pigtail)
HARDWARE	
STYLE OF HARDWARE: 00 None 22 Two fixed jacknut assemblies (62*) 99 Keying hardware, see options below (Body material 2, 3 and 4 only)	STYLE OF HARDWARE: 00 None 22 Two fixed jacknut assemblies (62*) 41 Two turning jackscrews, allen head, retaining ring (81*) 42 Two long turning jackscrews, allen head, retaining ring (82*) 43 Two turning jackscrews, slot head, retaining ring (83*) 44 Two long turning jackscrews, slot head, retaining ring (84*) 45 Two turning jackscrews, allen head, captivated** (85*) 99 Keying hardware, see options below (Body material 2, 3 and 4 only)
POLARIZATION / WIRING: 00 None	POLARIZATION / WIRING 00 None XX For wiring codes, see page MA-3 & MA-4
OPTIONS	
KPXX Two fixed jacknuts. See page MA-6 for keying options (KN*) 0B7 Threaded inserts	KSXX Two turning jackscrews and interfacial sealing gasket. See page MA-6 for keying options (KJ*) 900 Interfacial sealing gasket

* = Use numbers or letters in parenthesis when ordering size 100.
** = Captive hardware is factory installed and non-removable.
☒ = Option not RoHS compliant

AirBorn

Recommended PC Board Layout

Straight, Narrow Footprint

PLUG
PC BOARD LAYOUT
COMPONENT SIDE

CONNECTOR
MATING FACE
(PLUG)

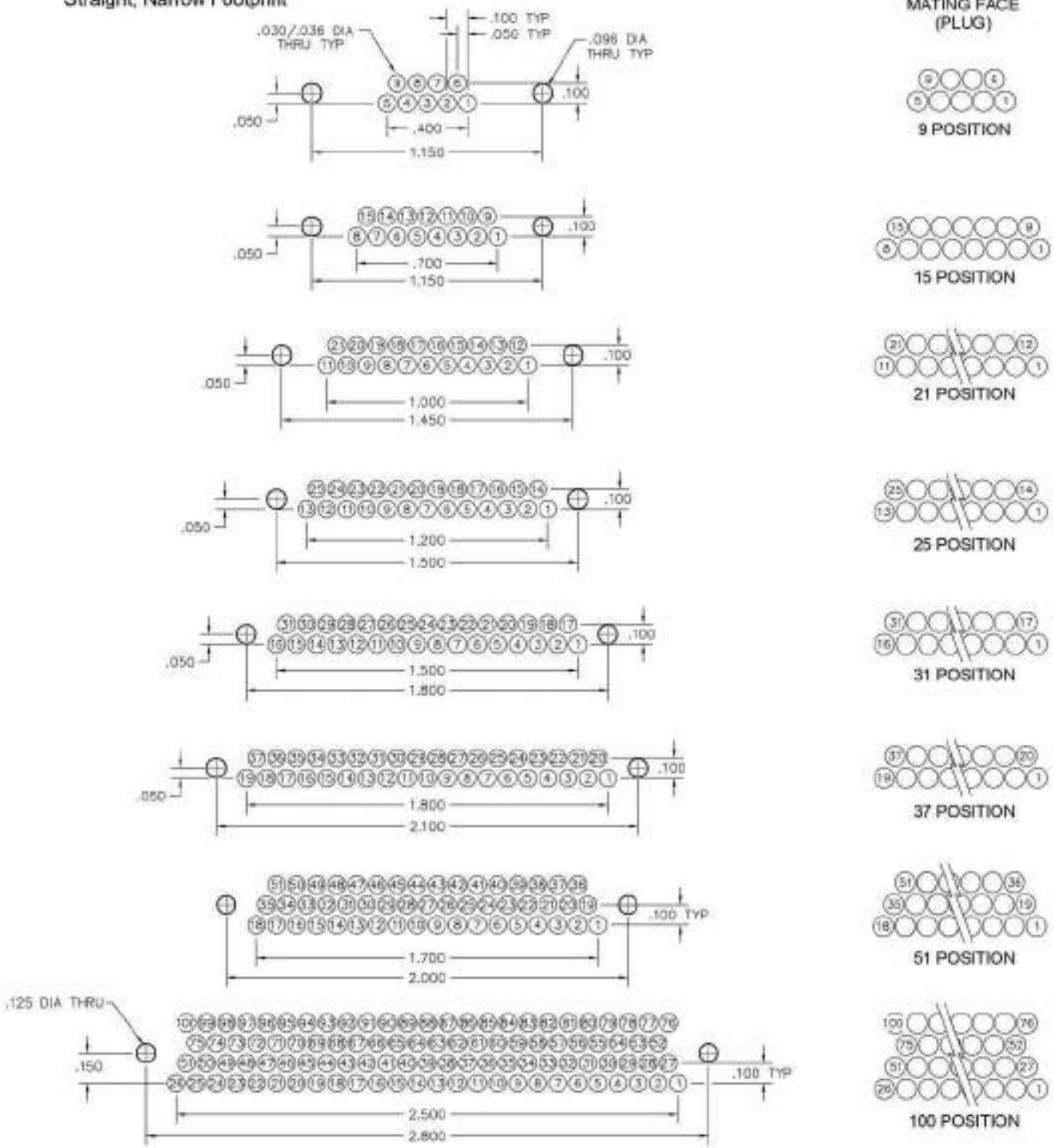

AirBorn

Recommended PC Board Layout

Straight, Narrow Footprint

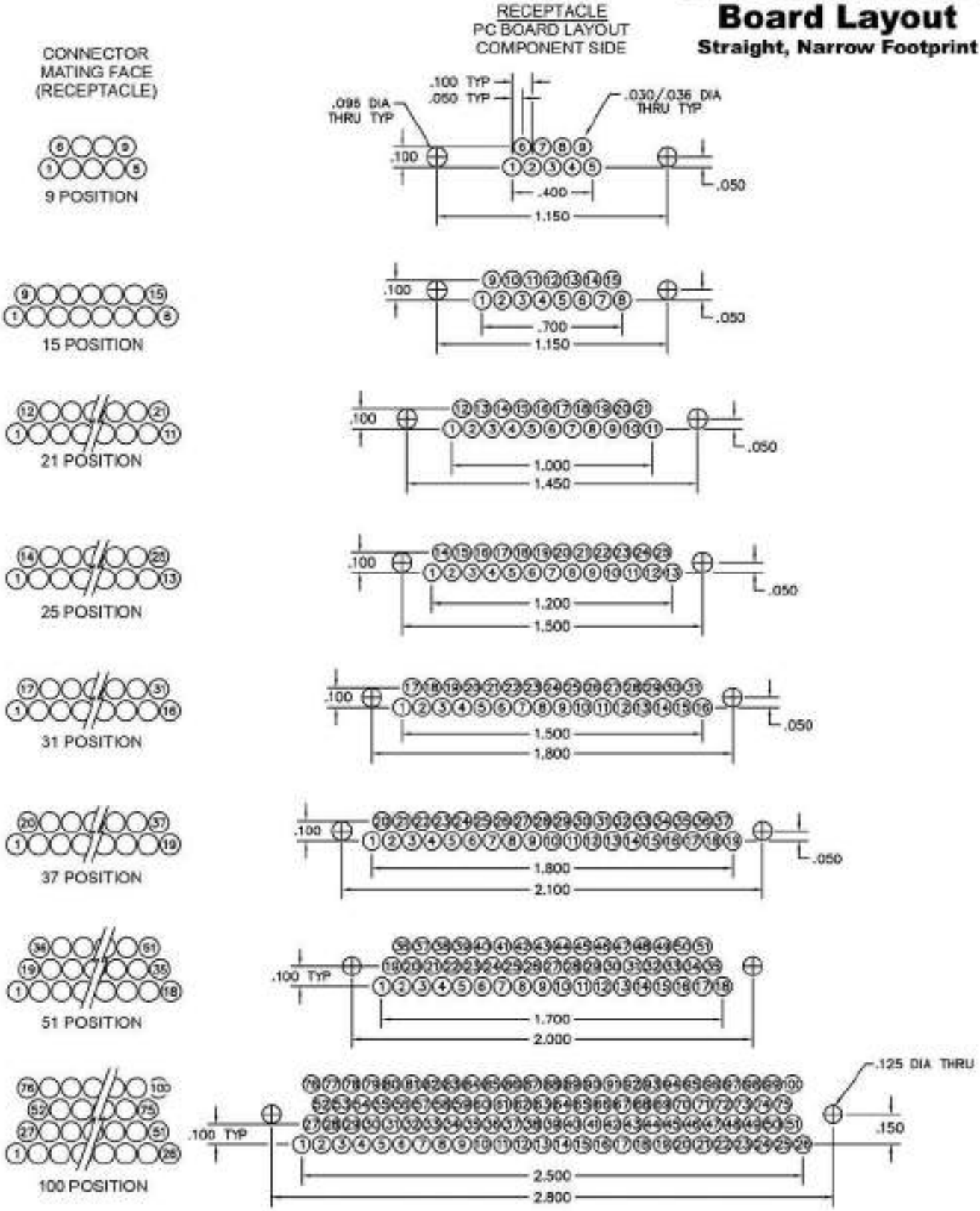

AirBorn

Cable to Board (Standard Footprint)

.050"

9 thru 100 Contacts

Rugged Cable

MM, MN

Rugged Board Mount

MK, ML

MM-312-051-161-45WP (METAL)

MN-311-051-161-45WP (PLASTIC)

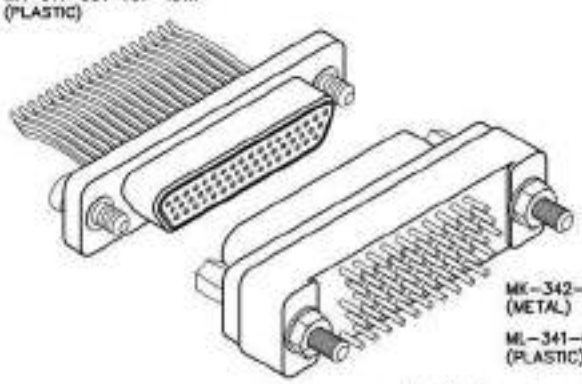

MK-342-051-225-2200 (METAL)

ML-341-051-225-2200 (PLASTIC)

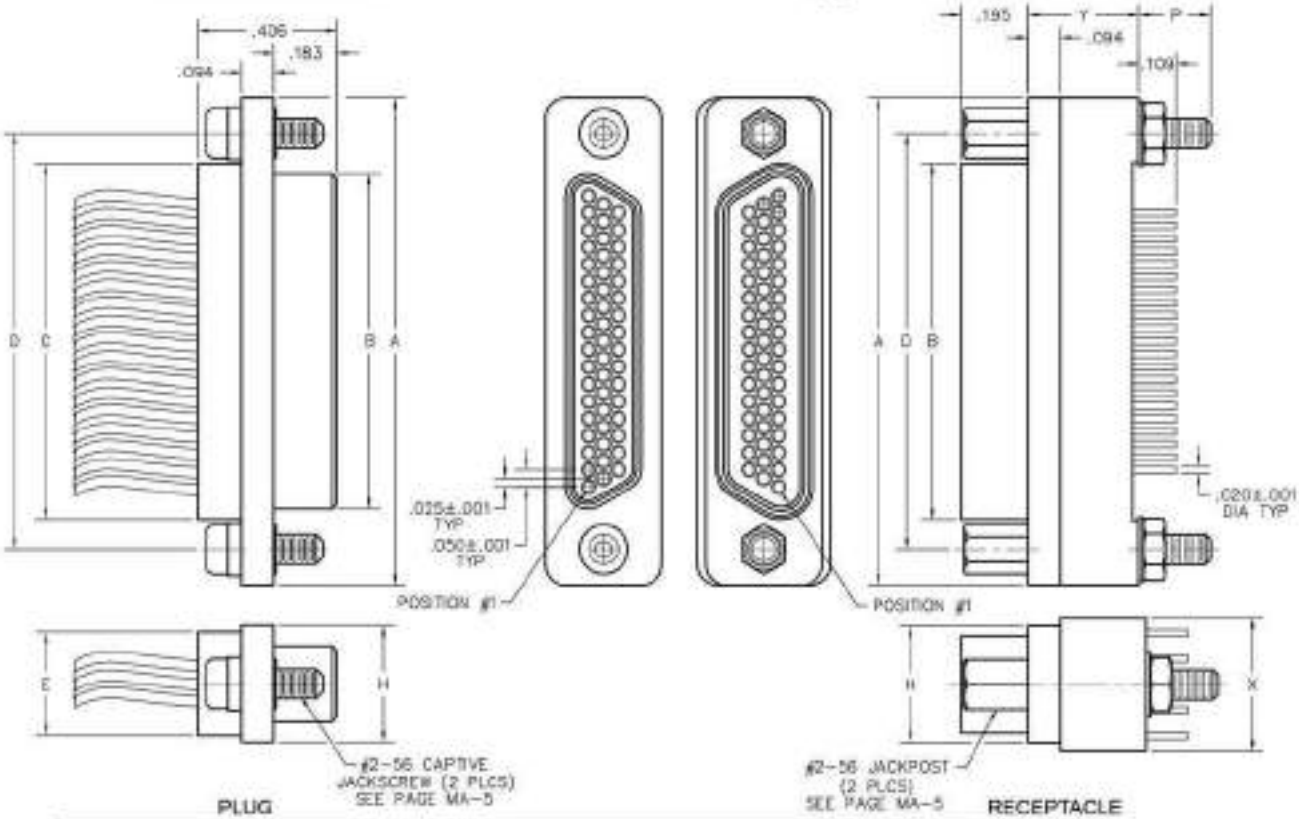

PLUG

RECEPTACLE

DIMENSIONS														
SIZE	CONTACT ROWS	A	B PLUG MAX	B RCPT MAX	C	D	E POTTING WELL MAX	H	F	X	Y	Z**	HARDWARE
9	2	.775	.334	.400	.390	.565	.270	.298	.210	.298	.280	.390	#2-56 UNC THD (#2-56 CLEARANCE OR #2-56 UNC THREADED INSERT)
15		.925	.484	.550	.540	.715						.540	
21		1.075	.634	.700	.690	.865						.690	
25		1.175	.734	.800	.790	.965						.780	
31		1.325	.884	.950	.940	1.115						.930	
37		1.475	1.034	1.100	1.090	1.265			.214		.330	1.080	
51	3	1.425	.984	1.050	1.040	1.215	.310	.341	.219	.390	.325	1.046	
69		1.725	1.284	1.350	1.340	1.515						1.346	
100	4	2.160	1.384	1.508	1.432	1.800	.360	.364	.216	.490	.379	1.530	#4-40 UNC THD (#4-40 CLEARANCE OR #4-40 UNC THREADED INSERT)

* = 69 POSITION CONNECTORS ARE AVAILABLE IN METAL ONLY.
** = "Z" DIMENSION FOR TURNING JACKSCREW ONLY

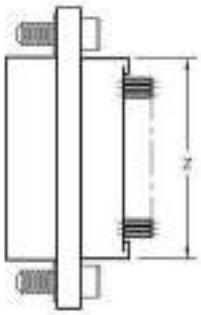

AirBorn

PLUG: MM-312-051-161-45WP
RECEPTACLE: MK-342-051-225-2200
PLUG: MN-311-051-161-45WP
RECEPTACLE: ML-341-051-225-2200

XX-XXX-XXX-XXX-XXXX-XXX

PLUG	RECEPTACLE
SERIES	
MM .050" Rugged Metal I/O Connector MN .050" Rugged Plastic I/O Connector (MM & MN mate with MK, ML, MM, MN receptacles)	MK .050" Rugged Metal PC Board Mount Connector ML .050" Rugged Plastic PC Board Mount Connector (MK & ML mate with MK, ML, MM, MN plugs)
BODY	
2 2-Row (Sizes 9 thru 37) 3 3-Row (Size 51 & 69***) 4 4-Row (Size 100)	2 2-Row (Sizes 9 thru 37) 3 3-Row (Size 51 & 69***) 4 4-Row (Size 100)
BODY STYLE: 1 Plug, straight, with ears	BODY STYLE: 4 Receptacle, straight, standard footprint
BODY MATERIAL: 1 Polyphenylene Sulfide (MN only) 2 Polyphenylene Sulfide with electroless nickel shell 3 Polyphenylene Sulfide with electrodeposited cadmium shell ☒ 4 Polyphenylene Sulfide with hard anodized black shell 5 Polyphenylene Sulfide with stainless steel shell A Pure Electro-Deposited Aluminum K Zinc Nickel Plating T Nickel Polymer Plating	BODY MATERIAL: 1 Polyphenylene Sulfide (ML only) 2 Polyphenylene Sulfide with electroless nickel shell 3 Polyphenylene Sulfide with electrodeposited cadmium shell ☒ 4 Polyphenylene Sulfide with hard anodized black shell 5 Polyphenylene Sulfide with stainless steel shell A Pure Electro-Deposited Aluminum K Zinc Nickel Plating T Nickel Polymer Plating
SIZE	
XXX 009, 015, 021, 025, 031, 037, 051, 069***, 100	XXX 009, 015, 021, 025, 031, 037, 051, 069***, 100
CONTACTS	
TYPE CONTACTS/TERMINATIONS: 11 Pin, straight, solder cup 14 Pin, straight, .500" pigtails (.018 dia) 15 Pin, straight, 1.000" pigtails (.018 dia) 16 Pin, straight, crimped wire	TYPE CONTACTS/TERMINATIONS: 22 Socket, straight, PCB leads, .109" 23 Socket, straight, PCB leads, .140" 24 Socket, straight, PCB leads, .172"
PLATING OPTIONS: 1 50 µ" Au contacts (crimp wire) 3 50 µ" Au contacts; 10 µ" Au terminations (solder cup, pigtail) 5 50 µ" Au contacts; Sn/Pb alloy terminations (pigtail) ☒ 7 50 µ" Au contacts; SAC305 terminations (pigtail)	PLATING OPTIONS: 3 50 µ" Au contacts; 10 µ" Au terminations 5 50 µ" Au contacts; Sn/Pb alloy terminations ☒ 7 50 µ" Au contacts; SAC305 terminations
HARDWARE	
STYLE OF HARDWARE: 00 None 22 Two fixed jacknut assemblies (62*) 41 Two turning jackscrews, allen head, retaining ring (81*) 42 Two long turning jackscrews, allen head, retaining ring (82*) 43 Two turning jackscrews, slot head, retaining ring (83*) 44 Two long turning jackscrews, slot head, retaining ring (84*) 45 Two turning jackscrews, allen head, captivated** (85*) 99 Keying hardware, see options below (Body material 2, 3 and 4 only)	STYLE OF HARDWARE: 00 None 22 Two fixed jacknut assemblies (62*) 41 Two turning jackscrews, allen head, retaining ring**** (81*) 99 Keying hardware, see options below (Body material 2, 3 and 4 only)
POLARIZATION / WIRING: 00 None XX For wiring codes, see page MA-3 & MA-4	POLARIZATION / WIRING 00 None
OPTIONS	
KSXX Two turning jackscrews. See page MA-6 for keying options (KJ*)	KPXX Two fixed jacknuts and interfacial sealing gasket. See page MA-6 for keying options (KN*) 900 Interfacial sealing gasket 087 Threaded inserts and interfacial sealing gasket

* = Use numbers or letters in parenthesis when ordering size 100.
** = Captive hardware is factory installed and non-removable.
☒ = Option not RoHS compliant
*** = 69 position connectors are available in metal only.
**** = Connector body has no mounting holes.

AirBorn

Cable to Board (Standard Footprint)

.050"

9 thru 100 Contacts

Rugged Cable

MM, MN

Rugged Board Mount

MK, ML

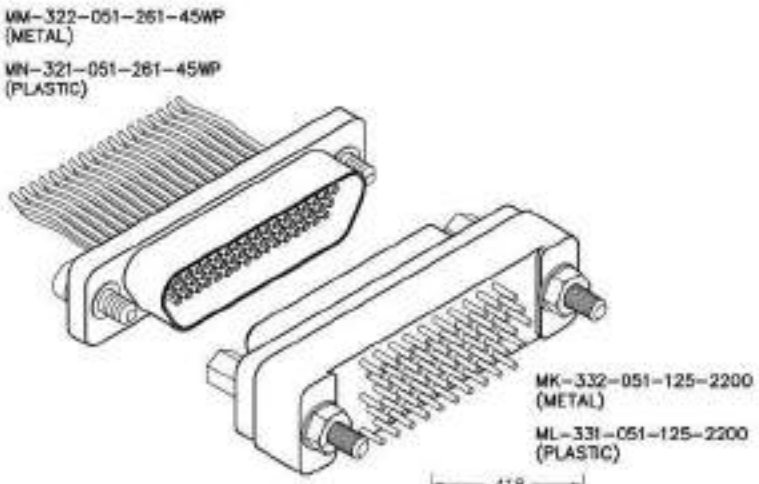

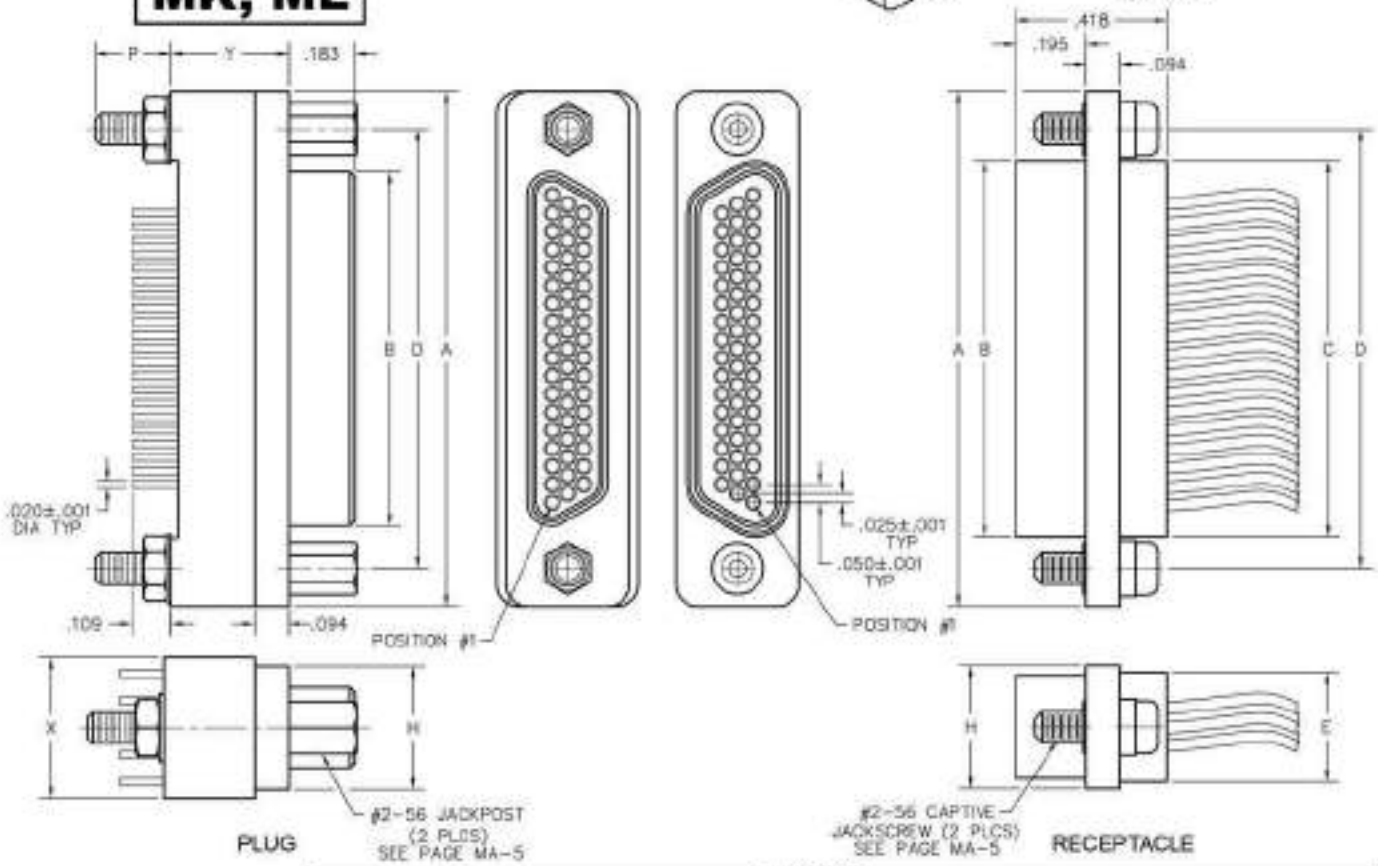

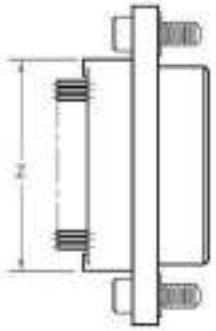

DIMENSIONS													
SIZE	CONTACT ROWS	A	B PLUG MAX	B RCPT MAX	C	D	E POTTING WELL MAX	H	P	X	Y	Z**	HARDWARE
9	2	.775	.334	.400	.390	.565	.270	.298	.210	.298	.280	.390	#2-56 UNC THD (#2-56 CLEARANCE OR #2-56 UNC THREADED INSERT)
15		.925	.484	.550	.540	.715						.540	
21		1.075	.634	.700	.690	.865						.690	
25		1.175	.734	.800	.790	.965						.780	
31		1.325	.884	.950	.940	1.115						.930	
37		1.475	1.034	1.100	1.090	1.265			.214		.330	1.080	
51	3	1.425	.984	1.050	1.040	1.215	.310	.341	.219	.390	.325	1.046	
69		1.725	1.284	1.350	1.340	1.515						1.346	
100	4	2.160	1.384	1.508	1.432	1.800	.360	.384	.216	.490	.379	1.530	#4-40 UNC THD (#4-40 CLEARANCE OR #4-40 UNC THREADED INSERT)

* = 69 POSITION CONNECTORS ARE AVAILABLE IN METAL ONLY.
** = "Z" DIMENSION FOR TURNING JACKSCREW ONLY

AirBorn

PLUG: MK–332–051–125–2200
RECEPTACLE: MM–322–051–261–45WP
PLUG: ML–331–051–125–2200
RECEPTACLE: MN–321–051–261–45WP

XX–XXX–XXX–XXX–XXXX–XXX

PLUG	RECEPTACLE
SERIES	
MK .050" Rugged Metal PC Board Mount Connector ML .050" Rugged Plastic PC Board Mount Connector (MK & ML mate with MK, ML, MM, MN receptacles)	MM .050" Rugged Metal I/O Connector MN .050" Rugged Plastic I/O Connector (MM & MN mate with MK, ML, MM, MN plugs)
BODY	
2 2-Row (Sizes 9 thru 37) 3 3-Row (Size 51 & 69***) 4 4-Row (Size 100)	2 2-Row (Sizes 9 thru 37) 3 3-Row (Size 51 & 69***) 4 4-Row (Size 100)
BODY STYLE: 3 Plug, straight, standard footprint	BODY STYLE: 2 Receptacle, straight, with ears
BODY MATERIAL: 1 Polyphenylene Sulfide (ML only) 2 Polyphenylene Sulfide with electroless nickel shell 3 Polyphenylene Sulfide with electrodeposited cadmium shell ☒ 4 Polyphenylene Sulfide with hard anodized black shell 5 Polyphenylene Sulfide with stainless steel shell A Pure Electro-Deposited Aluminum K Zinc Nickel Plating T Nickel Polymer Plating	BODY MATERIAL: 1 Polyphenylene Sulfide (MN only) 2 Polyphenylene Sulfide with electroless nickel shell 3 Polyphenylene Sulfide with electrodeposited cadmium shell ☒ 4 Polyphenylene Sulfide with hard anodized black shell 5 Polyphenylene Sulfide with stainless steel shell A Pure Electro-Deposited Aluminum K Zinc Nickel Plating T Nickel Polymer Plating
SIZE	
XXX 009, 015, 021, 025, 031, 037, 051, 069***, 100	XXX 009, 015, 021, 025, 031, 037, 051, 069***, 100
CONTACTS	
TYPE CONTACTS/TERMINATIONS: 12 Pin, straight, PCB leads, .100" 13 Pin, straight, PCB leads, .140" 14 Pin, straight, PCB leads, .172"	TYPE CONTACTS/TERMINATIONS: 21 Socket, straight, solder cup 24 Socket, straight, .500" pigtails (.018 dia) 25 Socket, straight, 1.000" pigtails (.018 dia) 26 Socket, straight, crimped wire
PLATING OPTIONS: 3 50 µ" Au contacts; 10 µ" Au terminations 5 50 µ" Au contacts; Sn/Pb alloy terminations ☒ 7 50 µ" Au contacts; SAC305 terminations	PLATING OPTIONS: 1 50 µ" Au contacts (crimp wire) 3 50 µ" Au contacts; 10 µ" Au terminations (solder cup, pigtail) 5 50 µ" Au contacts; Sn/Pb alloy terminations (pigtail) ☒ 7 50 µ" Au contacts; SAC305 terminations (pigtail)
HARDWARE	
STYLE OF HARDWARE: 00 None 22 Two fixed jacknut assemblies (62*) 41 Two turning jackscrews, allen head, retaining ring**** (81*) 99 Keying hardware, see options below (Body material 2, 3 and 4 only)	STYLE OF HARDWARE: 00 None 22 Two fixed jacknut assemblies (62*) 41 Two turning jackscrews, allen head, retaining ring (81*) 42 Two long turning jackscrews, allen head, retaining ring (82*) 43 Two turning jackscrews, slot head, retaining ring (83*) 44 Two long turning jackscrews, slot head, retaining ring (84*) 45 Two turning jackscrews, allen head, captivated** (85*) 99 Keying hardware, see options below (Body material 2, 3 and 4 only)
POLARIZATION / WIRING: 00 None	POLARIZATION / WIRING 00 None XX For wiring codes, see page MA-3 & MA-4
OPTIONS	
KPXX Two fixed jacknuts. See page MA-6 for keying options (KN*) DB7 Threaded inserts	KSXX Two turning jackscrews and interfacial sealing gasket. See page MA-6 for keying options (KJ*) 900 Interfacial sealing gasket

* = Use numbers or letters in parenthesis when ordering size 100.
** = Captive hardware is factory installed and non-removable.
☒ = Option not RoHS compliant
*** = 69 position connectors are available in metal only.
**** = Connector body has no mounting holes.

AirBorn

Recommended PC Board Layout

Straight, Standard Footprint

CONNECTOR MATING FACE (PLUG)

9 POSITION

15 POSITION

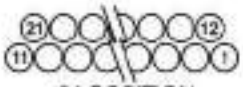

21 POSITION

25 POSITION

31 POSITION

37 POSITION

PLUG
PC BOARD LAYOUT
COMPONENT SIDE

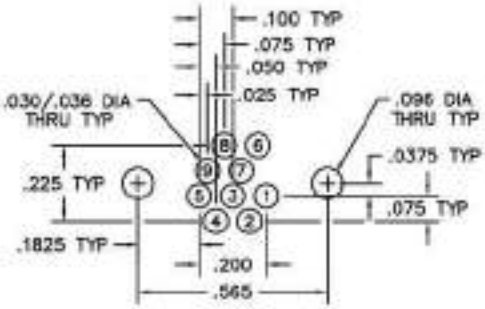

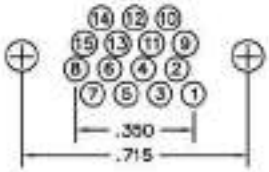

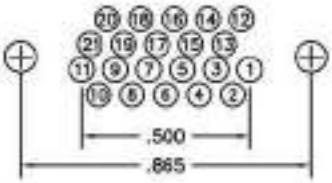

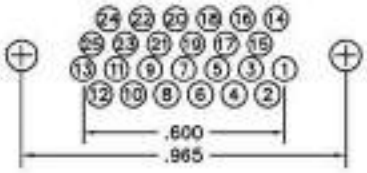

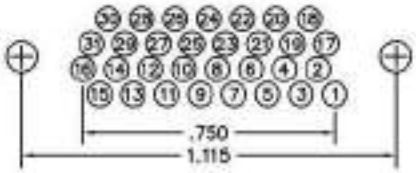

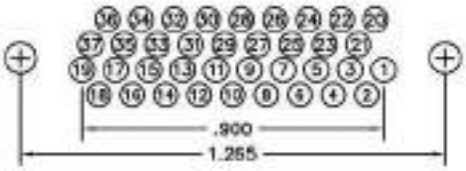

Recommended PC Board Layout

Straight, Standard Footprint

PLUG
PC BOARD LAYOUT
COMPONENT SIDE

CONNECTOR
MATING FACE
(PLUG)

51 POSITION

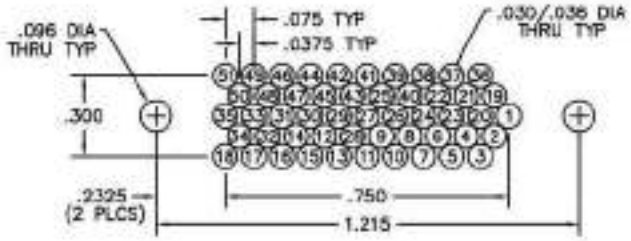

69 POSITION

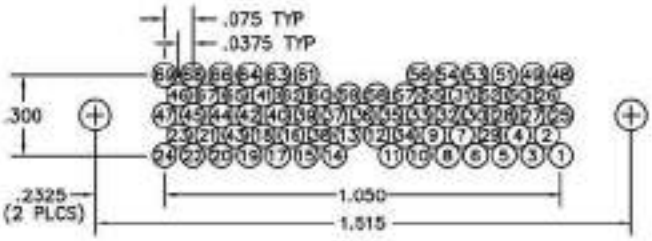

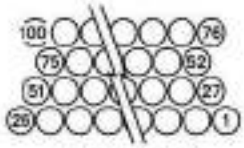

100 POSITION

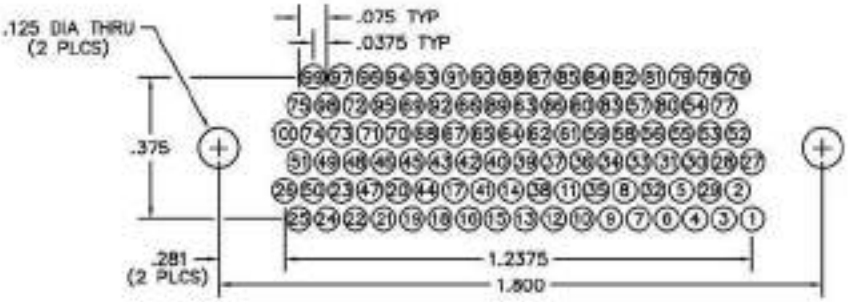

AirBorn

Recommended PC Board Layout

Straight, Standard Footprint

RECEPTACLE
PC BOARD LAYOUT
COMPONENT SIDE

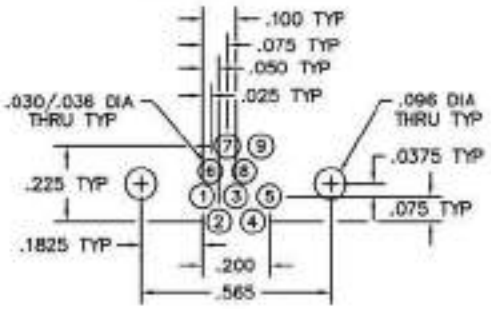

CONNECTOR
MATING FACE
(RECEPTACLE)

9 POSITION

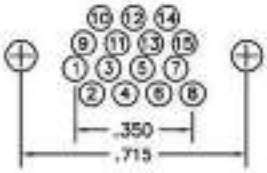

15 POSITION

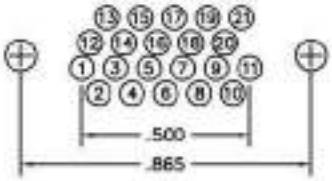

21 POSITION

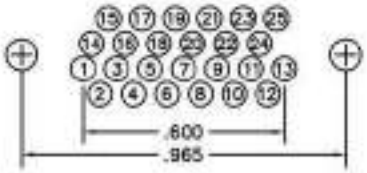

25 POSITION

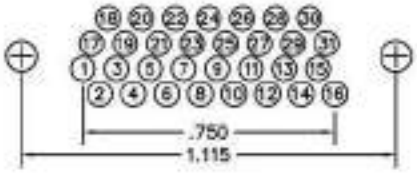

31 POSITION

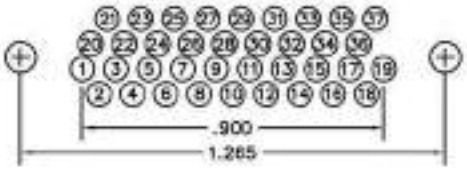

37 POSITION

Recommended PC Board Layout

Straight, Standard Footprint

RECEPTACLE
PC BOARD LAYOUT
COMPONENT SIDE

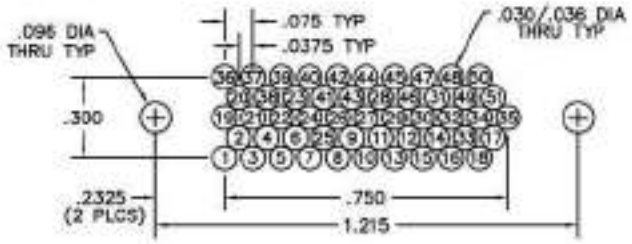

CONNECTOR
MATING FACE
(RECEPTACLE)

51 POSITION

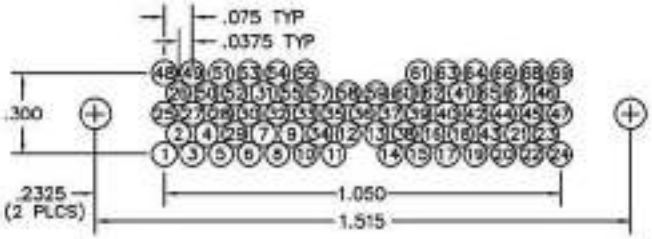

69 POSITION

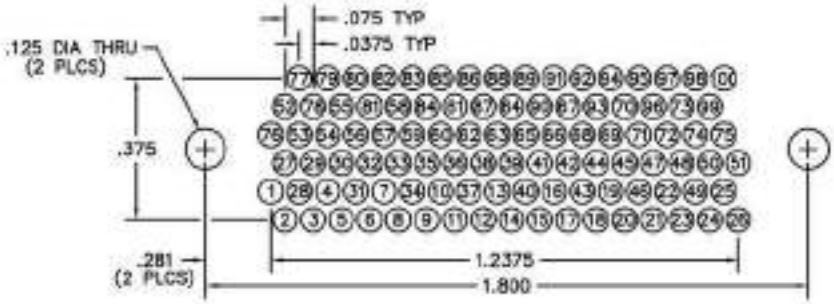

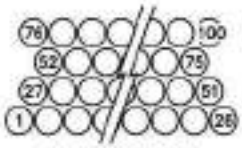

100 POSITION

AirBorn

Specifications - Surface Mount Connectors

Materials and Finishes *

Contacts:	Pins: BeCu alloy strip per ASTM B194 Sockets: Brass per ASTM B121 / B121M or ASTM B16 / B16M or ASTM B453
Contact Finish:	Gold plate per ASTM B488
Shells:	Aluminum Alloy 6061-T6 per SAE AMS-QQ-A-250/11 or 6061-T6511 per SAE AMS-QQ-A-200/8 or Stainless Steel 300 series per ASTM A484 / A484M and ASTM A582 / A582M Passivated per SAE AMS2700
Aluminum Shell Finishes:	Electroless Nickel per SAE AMS2404, Class 3, 500 µ" min Electrodeposited Cadmium per SAE AMS-QQ-P-416, Type II, Class 3 Black Anodized per MIL-A-8625, Type III, Class 2
Molded Insulators:	Glass filled polyphenylene sulfide per MIL-M-24519
Embedment:	Frey Engineering Co. insulating compound CF3003-80 and L-II-49 or equivalent
Jackscrews, Jackposts and Nuts:	Corrosion resistant steel per ASTM A320 or ASTM A484 / A484M and ASTM A582 / A582M Passivated per SAE AMS2700
Clips and Washers:	Corrosion resistant steel per ASME 18.24 or NASM35333 or ASTM A484/A484M and ASTM A582/A582M (For reference only: ASME 18.24 CRS per ASTM A693 and NASM35333 CRS per ASTM A240) Passivated per ASME 18.24 or NASM35333 or SAE AMS2700 (For reference only: ASME 18.24 and NASM35333 passivated per SAE AMS2700)
Brackets:	Card Edge Mount: Aluminum Alloy 7075-T6 per SAE AMS-QQ-A-250/12 or SAE AMS-QQ-A-200/11 Plating consistent with Aluminum Shell Horizontal Surface Mount: Corrosion resistant steel per ASTM A240 Passivated per SAE AMS2700
Interfacial Seal Gaskets:	Fluorosilicone per SAE AMS-R-25988
Tolerances:	Unless otherwise specified: Fractions = ±1/64" Decimals = ±.010" Angles = ±5° Wire lengths: uninsulated/solid = +0.2"/-0.0"

Note: AirBorn can manufacture special configurations for your exact specifications.

* = Reference the above listed specifications or an equivalent industry standard when applicable

AirBorn

Performance - Surface Mount Connectors

Contact Rating:	3-amperes maximum
Solderability:	Terminals (except crimp) tested in accordance with MIL-STD-202, Method 208
Wire Size:	Solid #30 AWG standard (consult factory for other sizes and types)
Test Voltage:	600 V, RMS, 60 Hz
Operating Temperature:	-55° C to +125° C
Insulation Resistance:	5,000 megohms minimum @ 500 VDC
Durability:	500 connector mating cycles
Vibration:	Tested in accordance with MIL-STD-1344, Method 2005, Condition IV, according to MIL-83513
Shock:	Tested in accordance with MIL-STD-1344, Method 2004, Condition E, according to MIL-83513
Salt Spray:	Mated connectors tested in accordance with MIL-STD-1344, Method 1001, Test Condition B
Humidity:	Mated connectors tested in accordance with MIL-STD-1344, Method 1002, Type II (except steps 7a and 7b)
Thermal Shock:	Tested to the temperature extremes of MIL-STD-1344, Method 1003, Test Condition A (except step 3, temperature shall be 125° C)
Contact Resistance:	0.065 volt maximum drop @ 2.5 amps (.026 ohms)
Contact Engaging Force:	6.0 ounce maximum, with .0221 diameter test sleeve
Contact Separating Force:	0.5 ounce minimum, with .0230 diameter test sleeve
Crimp Strength:	5 pound minimum tensile strength

AirBorn

Board SMT to Cable

.050"

9 thru 51 Contacts

Rugged Metal

MM

Rugged Plastic

MN

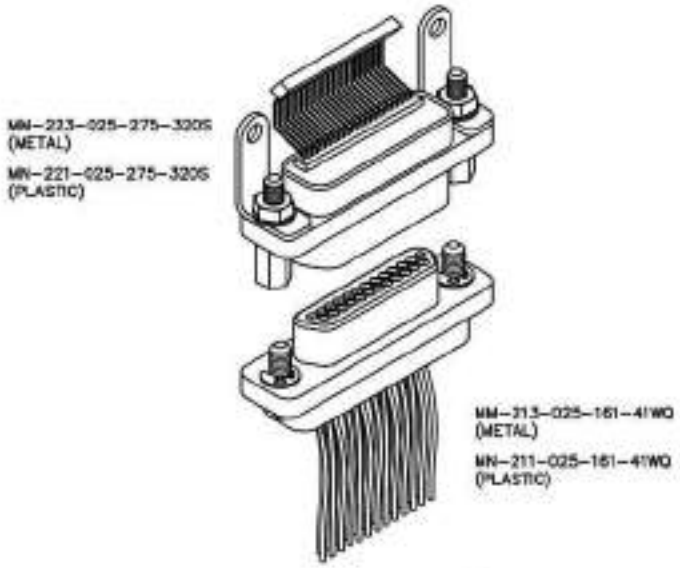

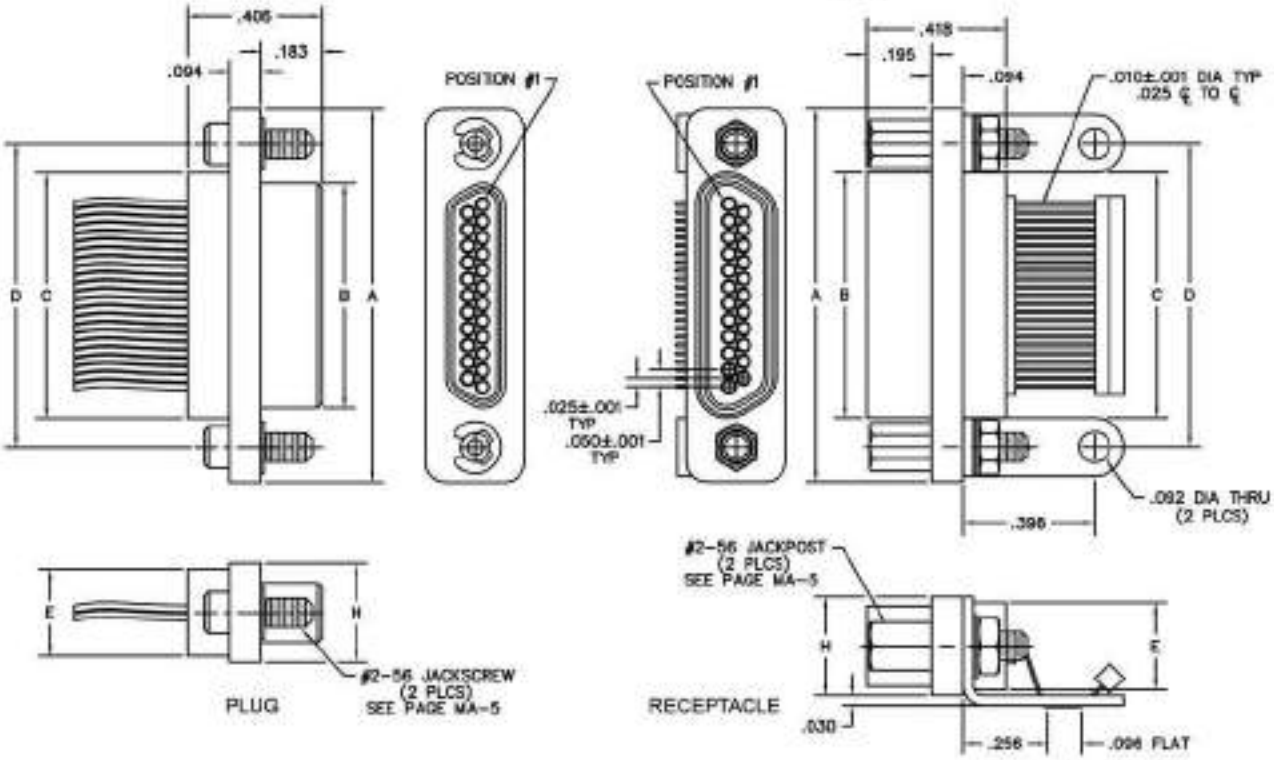

DIMENSIONS									
SIZE	CONTACT ROWS	A	B		C	D	E	H	HARDWARE
			PLUG MAX	RCPT MAX			POTTING WELL MAX		
9	2	.775	.334	.400	.390	.565	.270	.298	#2-56 UNC THD (.092 DIA THRU)
15		.925	.484	.550	.540	.715			
21		1.075	.634	.700	.690	.865			
25		1.175	.734	.800	.790	.965			
31		1.325	.884	.950	.940	1.115			
37		1.475	1.034	1.100	1.090	1.265			
51*		1.825	1.384	1.450	1.440	1.615			

* = 51 POSITION CONNECTORS ARE AVAILABLE IN METAL ONLY.

AirBorn

PLUG: MM–213–025–161–41WQ
RECEPTACLE: MM–223–025–275–320S
PLUG: MN–211–025–161–41WQ
RECEPTACLE: MN–221–025–275–320S

XX–XXX–XXX–XXX–XXXX–XXX

PLUG	RECEPTACLE
SERIES	
MM .050" Rugged Metal I/O Connector MN .050" Rugged Plastic I/O Connector (MM & MN mate with MK, ML, MM, MN receptacles)	MM .050" Rugged Metal PC Board Mount, SMT Connector MN .050" Rugged Plastic PC Board Mount, SMT Connector (MM & MN mate with MK, ML, MM, MN plugs)
BODY	
2 2-Row (Sizes 9 thru 51***)	2 2-Row (Sizes 9 thru 51***)
BODY STYLE: 1 Plug, straight, with ears	BODY STYLE: 2 Receptacle, straight, with ears
BODY MATERIAL: 1 Polyphenylene Sulfide (MN only) 2 Polyphenylene Sulfide with electroless nickel shell 3 Polyphenylene Sulfide with electrodeposited cadmium shell ☒ 4 Polyphenylene Sulfide with hard anodized black shell 5 Polyphenylene Sulfide with stainless steel shell A Pure Electro-Deposited Aluminum K Zinc Nickel Plating T Nickel Polymer Plating	BODY MATERIAL: 1 Polyphenylene Sulfide (MN only) 2 Polyphenylene Sulfide with electroless nickel shell 3 Polyphenylene Sulfide with electrodeposited cadmium shell ☒ 4 Polyphenylene Sulfide with hard anodized black shell 5 Polyphenylene Sulfide with stainless steel shell A Pure Electro-Deposited Aluminum K Zinc Nickel Plating T Nickel Polymer Plating
SIZE	
XXX 009, 015, 021, 025, 031, 037, 051***	XXX 009, 015, 021, 025, 031, 037, 051***
CONTACTS	
TYPE CONTACTS/TERMINATIONS: 11 Pin, straight, solder cup 14 Pin, straight, .500" pigtails (.018 dia) 15 Pin, straight, 1.000" pigtails (.018 dia) 16 Pin, straight, crimped wire	TYPE CONTACTS/TERMINATIONS: 27 Socket, Surface Mount
PLATING OPTIONS: 1 50 µ" Au contacts (crimp wire) 3 50 µ" Au contacts; 10 µ" Au terminations (solder cup, pigtail) 5 50 µ" Au contacts; Sn/Pb alloy terminations (pigtail) ☒ 7 50 µ" Au contacts; SAC305 terminations (pigtail)	PLATING OPTIONS: 5 50 µ" Au contacts; Sn/Pb alloy terminations ☒ 8 50 µ" Au contacts; Sn plated terminations
HARDWARE	
STYLE OF HARDWARE: 00 None 22 Two fixed jacknut assemblies 41 Two turning jackscrews, allen head, retaining ring 42 Two long turning jackscrews, allen head, retaining ring 43 Two turning jackscrews, slot head, retaining ring 44 Two long turning jackscrews, slot head, retaining ring 45 Two turning jackscrews, allen head, captivated**	STYLE OF HARDWARE: 00 None 32 Two fixed jacknut assemblies with mounting bracket 46 Two turning jackscrews, allen head, captivated** with mounting bracket
POLARIZATION / WIRING: 00 None XX For wiring codes, see page MA-3 & MA-4	POLARIZATION / WIRING OR Reverse Body Polarization OS Standard Body Polarization
OPTIONS	
	900 Interfacial sealing gasket

** = Captive hardware is factory installed and non-removable.
*** = 51 position connectors are available in metal only (non Mil-Spec interface).
☒ = Option not RoHS compliant

AirBorn

Board SMT to Cable

.050"

9 thru 51 Contacts

Rugged Metal

MM

Rugged Plastic

MN

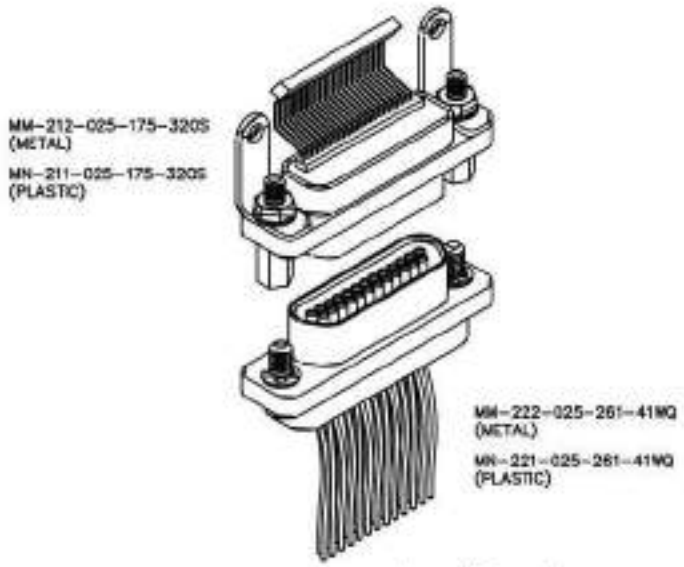

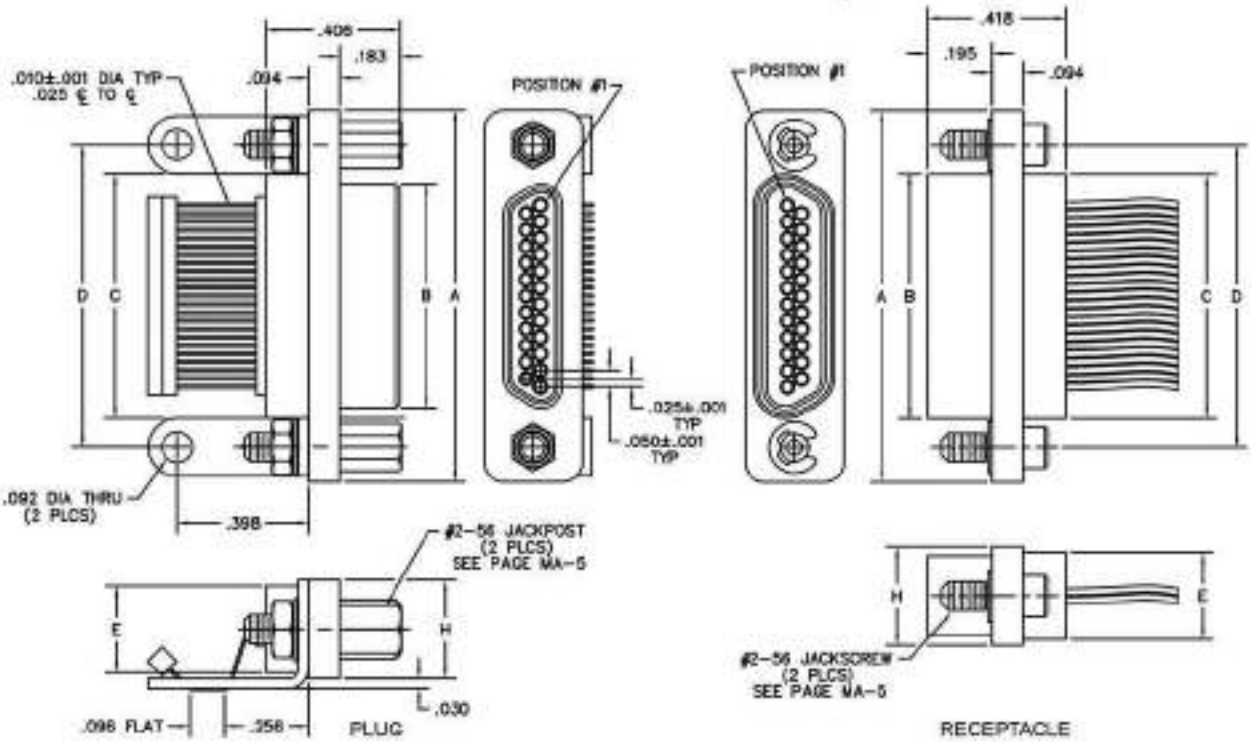

DIMENSIONS									
SIZE	CONTACT ROWS	A	B PLUG MAX	B RCPT MAX	C	D	E POTTING WELL MAX	H	HARDWARE
9	2	.775	.334	.400	.390	.565	.270	.298	#2-56 UNC THD (.092 DIA THRU)
15		.925	.484	.550	.540	.715			
21		1.075	.634	.700	.690	.865			
25		1.175	.734	.800	.790	.965			
31		1.325	.884	.950	.940	1.115			
37		1.475	1.034	1.100	1.090	1.265			
51*		1.825	1.384	1.450	1.440	1.615			

* = 51 POSITION CONNECTORS ARE AVAILABLE IN METAL ONLY.

AirBorn

PLUG:	MM–212–025–175–320S
RECEPTACLE:	MM–222–025–261–41WQ
PLUG:	MN–211–025–175–320S
RECEPTACLE:	MN–221–025–261–41WQ

XX–XXX–XXX–XXX–XXXX–XXX

PLUG	RECEPTACLE
SERIES	
MM .050" Rugged Metal PC Board Mount, SMT Connector MN .050" Rugged Plastic PC Board Mount, SMT Connector (MM & MN mate with MK, ML, MM, MN receptacles)	MM .050" Rugged Metal I/O Connector MN .050" Rugged Plastic I/O Connector (MM & MN mate with MK, ML, MM, MN plugs)
BODY	
2 2-Row (Sizes 9 thru 51***)	2 2-Row (Sizes 9 thru 51***)
BODY STYLE: 1 Plug, straight, with ears	BODY STYLE: 2 Receptacle, straight, with ears
BODY MATERIAL: 1 Polyphenylene Sulfide (MN only) 2 Polyphenylene Sulfide with electroless nickel shell 3 Polyphenylene Sulfide with electrodeposited cadmium shell ☒ 4 Polyphenylene Sulfide with hard anodized black shell 5 Polyphenylene Sulfide with stainless steel shell A Pure Electro-Deposited Aluminum K Zinc Nickel Plating T Nickel Polymer Plating	BODY MATERIAL: 1 Polyphenylene Sulfide (MN only) 2 Polyphenylene Sulfide with electroless nickel shell 3 Polyphenylene Sulfide with electrodeposited cadmium shell ☒ 4 Polyphenylene Sulfide with hard anodized black shell 5 Polyphenylene Sulfide with stainless steel shell A Pure Electro-Deposited Aluminum K Zinc Nickel Plating T Nickel Polymer Plating
SIZE	
XXX 009, 015, 021, 025, 031, 037, 051***	XXX 009, 015, 021, 025, 031, 037, 051***
CONTACTS	
TYPE CONTACTS/TERMINATIONS: 17 Pin, Surface Mount	TYPE CONTACTS/TERMINATIONS: 21 Socket, straight, solder cup 24 Socket, straight, .500" pigtails (.018 dia) 25 Socket, straight, 1.000" pigtails (.018 dia) 26 Socket, straight, crimped wire
PLATING OPTIONS: 5 50 µ" Au contacts; Sn/Pb alloy terminations ☒ 8 50 µ" Au contacts; Sn plated terminations	PLATING OPTIONS: 1 50 µ" Au contacts (crimp wire) 3 50 µ" Au contacts; 10 µ" Au terminations (solder cup, pigtail) 5 50 µ" Au contacts; Sn/Pb alloy terminations (pigtail) ☒ 7 50 µ" Au contacts; SAC305 terminations (pigtail)
HARDWARE	
STYLE OF HARDWARE: 00 None 32 Two fixed jacknut assemblies with mounting bracket 46 Two turning jackscrews, allen head, captivated** with mounting bracket	STYLE OF HARDWARE: 00 None 22 Two fixed jacknut assemblies 41 Two turning jackscrews, allen head, retaining ring 42 Two long turning jackscrews, allen head, retaining ring 43 Two turning jackscrews, slot head, retaining ring 44 Two long turning jackscrews, slot head, retaining ring 45 Two turning jackscrews, allen head, captivated**
POLARIZATION / WIRING: 0R Reverse Body Polarization 0S Standard Body Polarization	POLARIZATION / WIRING 00 None XX For wiring codes, see page MA-3 & MA-4
OPTIONS	
	900 Interfacial sealing gasket

** = Captive hardware is factory installed and non-removable.
*** = 51 position connectors are available in metal only (non Mil-Spec interface).

☒ = Option not RoHS compliant

AirBorn

Recommended PC Board Layout

Surface Mount
Standard Polarization

PLUG
PC BOARD LAYOUT
COMPONENT SIDE

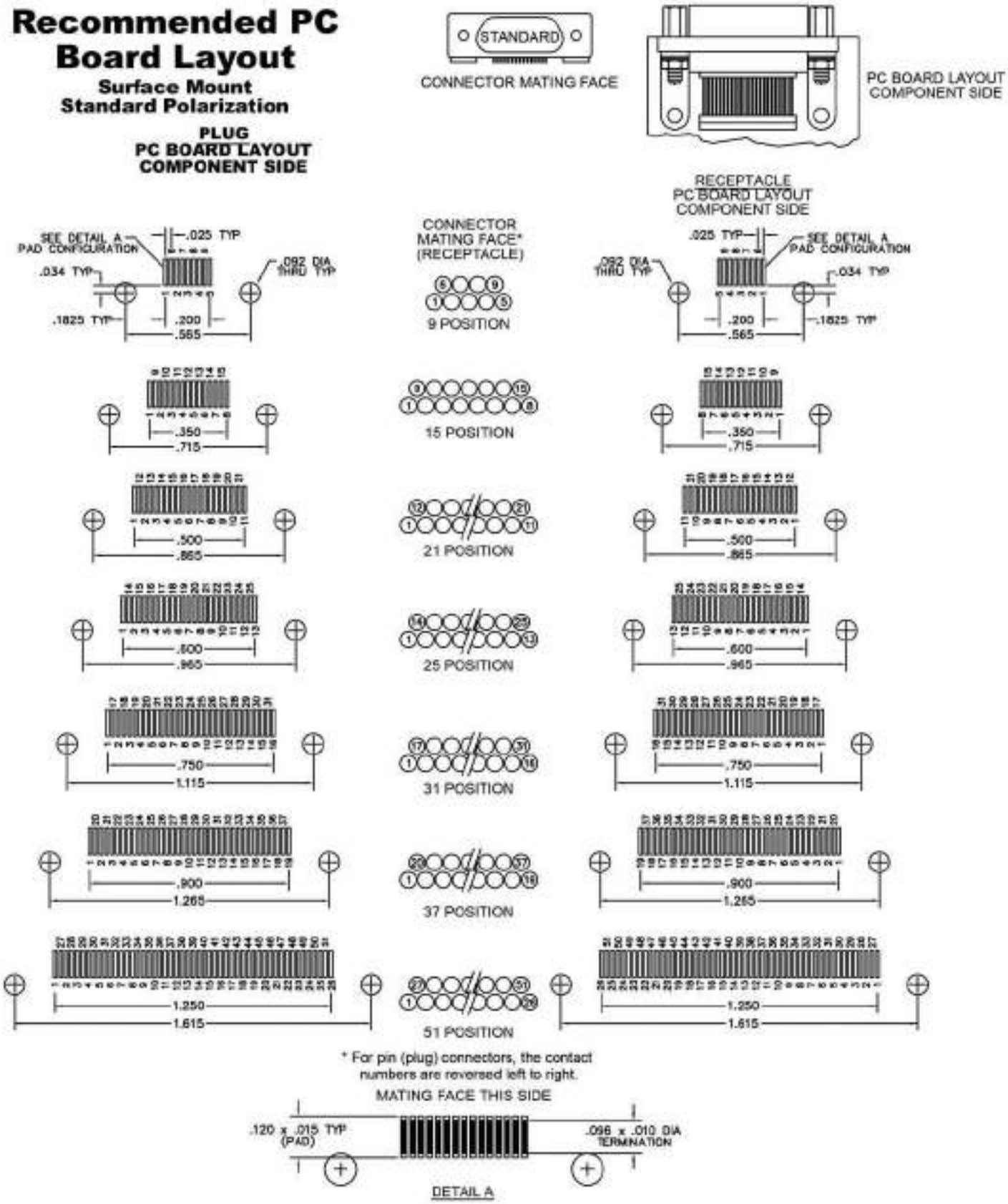

Recommended PC Board Layout

Surface Mount
Reverse Polarization

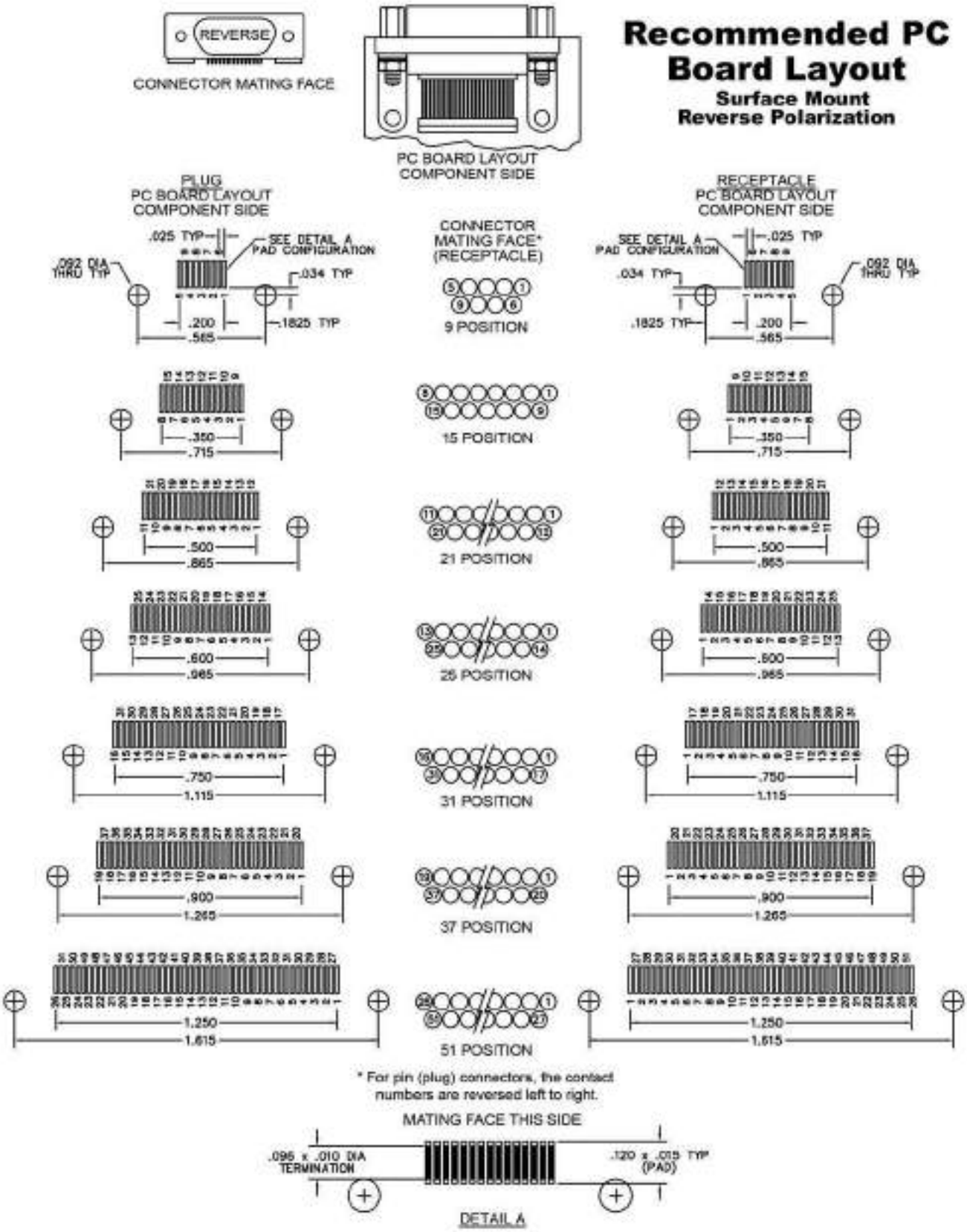

AirBorn

Cable to Board (Vertical Surface Mount)

.050"

9 thru 51 Contacts

Rugged Surface Mount

MK

Rugged Cable

MM

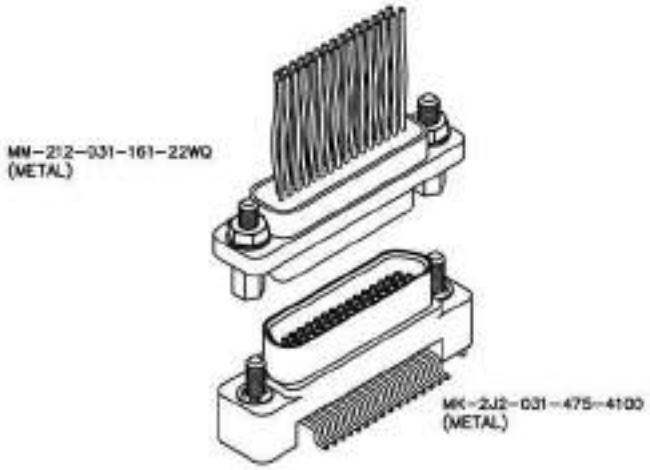

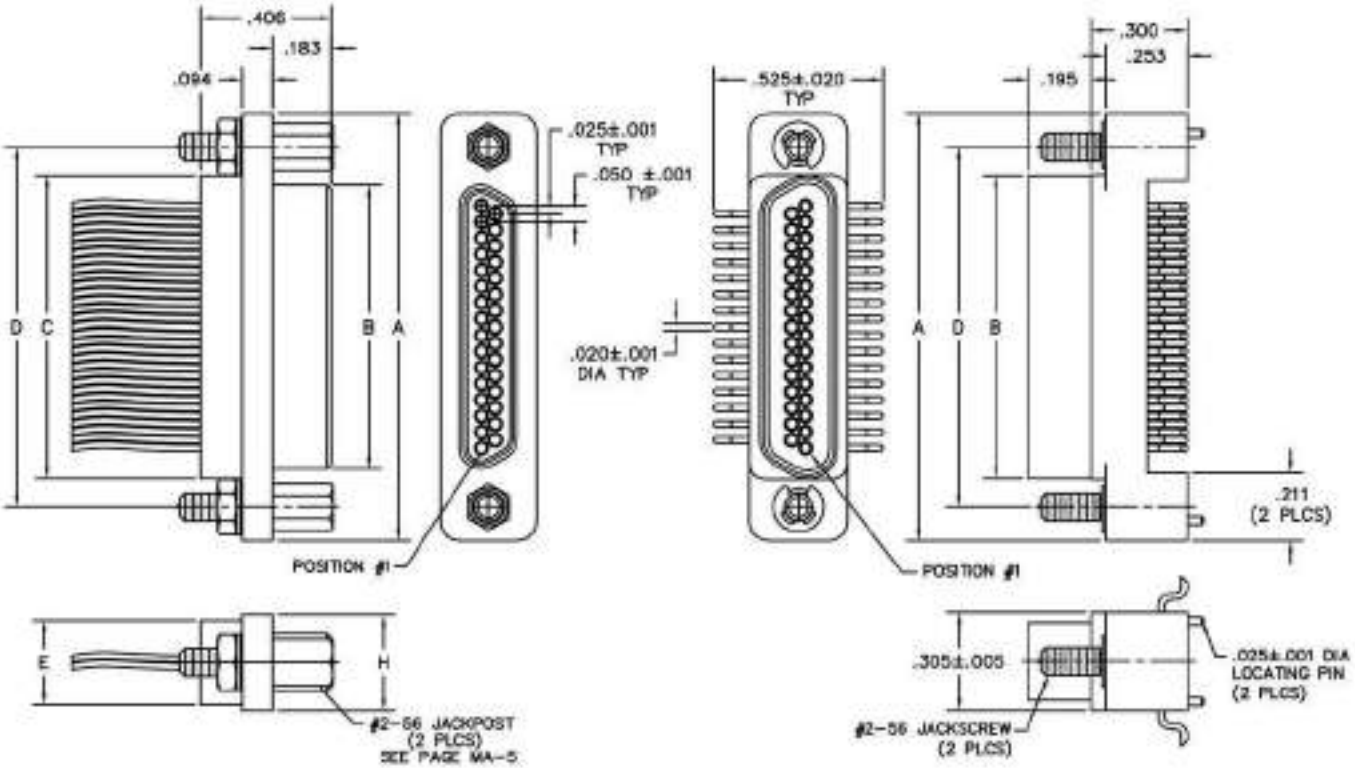

PLUG RECEPTACLE

DIMENSIONS									
SIZE	CONTACT ROWS	A	B PLUG MAX	B RCPT MAX	C	D	E POTTING WELL MAX	H	HARDWARE
9	2	.775	.334	.400	.390	.565	.270	.298	#2-56 UNC THD (.092 DIA THRU)
15		.925	.484	.550	.540	.715			
21		1.075	.634	.700	.690	.865			
25		1.175	.734	.800	.790	.965			
31		1.325	.884	.950	.940	1.115			
37		1.475	1.034	1.100	1.090	1.265			
51*		1.825	1.384	1.450	1.440	1.615			

* = 51 POSITION CONNECTORS ARE NON-MIL SPEC INTERFACE

AirBorn

PLUG: MM–212–031–161–41WQ
RECEPTACLE: MK–2J2–031–475–2200
XX–XXX–XXX–XXX–XXXX–XXX

PLUG	RECEPTACLE
SERIES	
MM .050" Rugged Metal I/O Connector (MM mates with MK, ML, MM, MN receptacles)	MK .050" Rugged Metal Surface Mount Connector (MK mates with MK, ML, MM, MN plugs)
BODY	
2 2-Row (Sizes 9 thru 51*)	2 2-Row (Sizes 9 thru 51*)
BODY STYLE:	BODY STYLE:
1 Plug, straight, with ears	J Receptacle, vertical surface mount
BODY MATERIAL:	BODY MATERIAL:
2 Polyphenylene Sulfide with electroless nickel shell	2 Polyphenylene Sulfide with electroless nickel shell
3 Polyphenylene Sulfide with electrodeposited cadmium shell ☒	3 Polyphenylene Sulfide with electrodeposited cadmium shell ☒
4 Polyphenylene Sulfide with hard anodized black shell	4 Polyphenylene Sulfide with hard anodized black shell
A Pure Electro-Deposited Aluminum	A Pure Electro-Deposited Aluminum
K Zinc Nickel Plating	K Zinc Nickel Plating
T Nickel Polymer Plating	T Nickel Polymer Plating
SIZE	
XXX 009, 015, 021, 025, 031, 037, 051*	XXX 009, 015, 021, 025, 031, 037, 051*
CONTACTS	
TYPE CONTACTS/TERMINATIONS:	TYPE CONTACTS/TERMINATIONS:
11 Pin, straight, solder cup	47 Socket, vertical smt
14 Pin, straight, .500" pigtails (.018 dia)	
15 Pin, straight, 1.000" pigtails (.018 dia)	
16 Pin, straight, crimped wire	
PLATING OPTIONS:	PLATING OPTIONS:
1 50 µ" Au contacts (crimp wire)	5 50 µ" Au contacts; Sn/Pb alloy terminations ☒
3 50 µ" Au contacts; 10 µ" Au terminations (solder cup, pigtail)	7 50 µ" Au contacts; SAC305 terminations
5 50 µ" Au contacts; Sn/Pb alloy terminations (pigtail) ☒	
7 50 µ" Au contacts; SAC305 terminations (pigtail)	
HARDWARE	
STYLE OF HARDWARE:	STYLE OF HARDWARE:
00 None	00 None
22 Two fixed jacknut assemblies	22 Two fixed jacknut assemblies
41 Two turning jackscrews, allen head, retaining ring	41 Two turning jackscrews, allen head, retaining ring
42 Two long turning jackscrews, allen head, retaining ring	99 Keying hardware, see options below
43 Two turning jackscrews, slot head, retaining ring	
44 Two long turning jackscrews, slot head, retaining ring	
45 Two turning jackscrews, allen head, captivated**	
99 Keying hardware, see options below	
POLARIZATION / WIRING:	POLARIZATION / WIRING
00 None	00 None
XX For wiring codes, see page MA-3 & MA-4	
OPTIONS	
KSXX Two turning jackscrews. See page MA-6 for keying options	KPXX Two fixed jacknuts and interfacial sealing gasket. See page MA-6 for keying options
	900 Interfacial sealing gasket

* = 2 row, 51 position connectors are non-Mil Spec interface.
** = Captive hardware is factory installed and non-removable.

☒ = Option not RoHS compliant

AirBorn

Cable to Board (Vertical Surface Mount)

.050"

9 thru 51 Contacts

Rugged Surface Mount

MK

Rugged Cable

MM

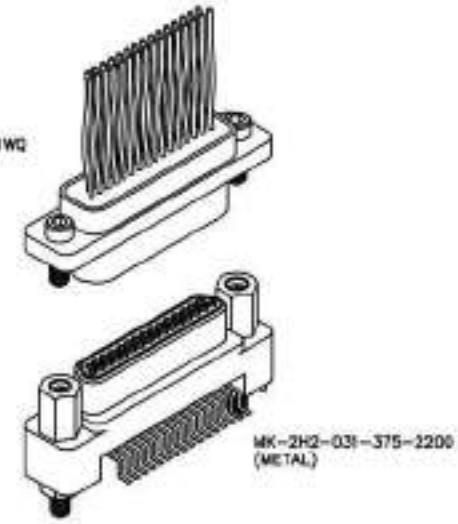

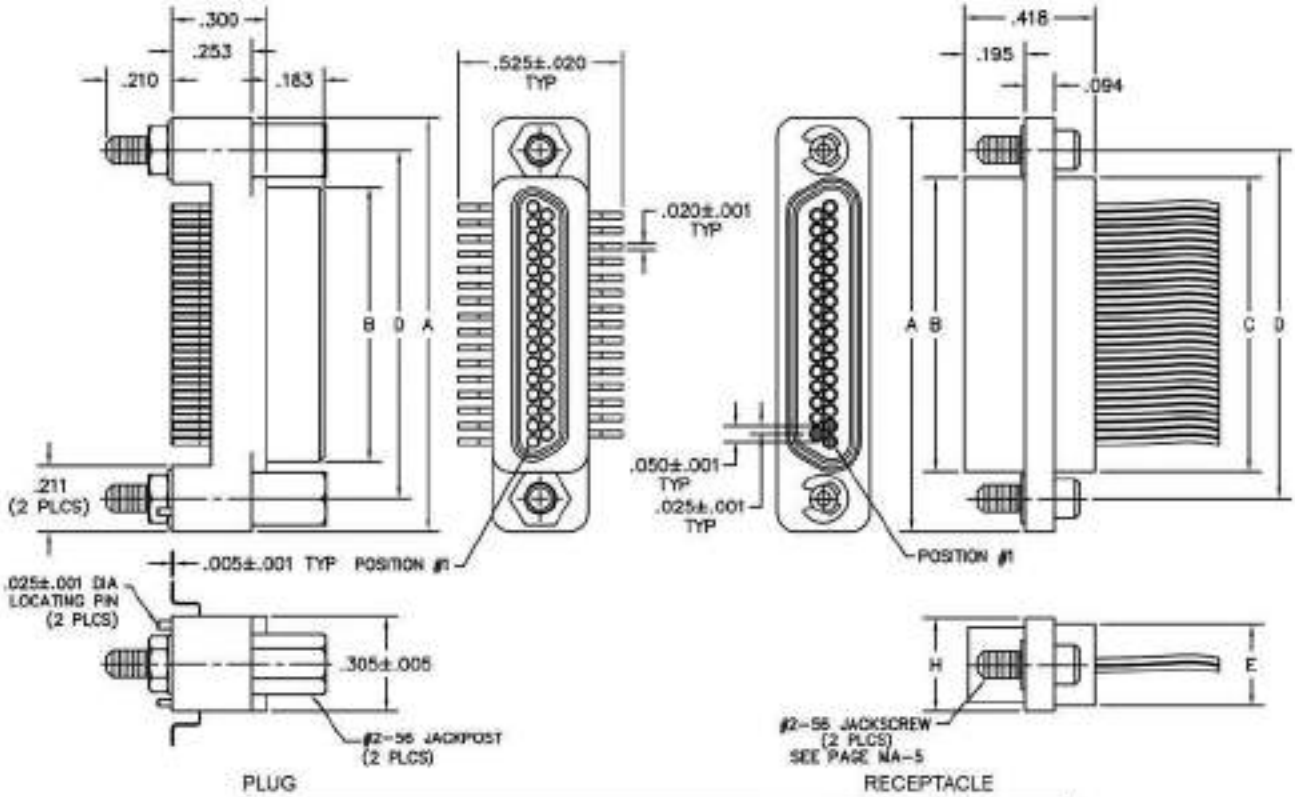

DIMENSIONS									
SIZE	CONTACT ROWS	A	B PLUG MAX	B RCPT MAX	C	D	E POTTING WELL MAX	H	HARDWARE
9	2	.775	.334	.400	.390	.565	.270	.298	#2-56 UNC THD (.092 DIA THRU)
15		.925	.484	.550	.540	.715			
21		1.075	.634	.700	.690	.865			
25		1.175	.734	.800	.790	.965			
31		1.325	.884	.950	.940	1.115			
37		1.475	1.034	1.100	1.090	1.265			
51*		1.825	1.384	1.450	1.440	1.615			

* = 51 POSITION CONNECTORS ARE NON-MIL SPEC INTERFACE

AirBorn

PLUG: MK–2H3–031–375–2200
RECEPTACLE: MM–223–031–213–4100
XX–XXX–XXX–XXX–XXX–XXXX–XXX

PLUG	RECEPTACLE
SERIES	
MK .050" Rugged Metal Surface Mount Connector (MK mates with MK, ML, MM, MN receptacles)	MM .050" Rugged Metal I/O Connector (MM mates with MK, ML, MM, MN plugs)
BODY	
2 2-Row (Sizes 9 thru 51*)	2 2-Row (Sizes 9 thru 51*)
BODY STYLE:	BODY STYLE:
H Plug, vertical surface mount	2 Receptacle, straight, with ears
BODY MATERIAL:	BODY MATERIAL:
2 Polyphenylene Sulfide with electroless nickel shell	2 Polyphenylene Sulfide with electroless nickel shell
3 Polyphenylene Sulfide with electrodeposited cadmium shell ☒	3 Polyphenylene Sulfide with electrodeposited cadmium shell ☒
4 Polyphenylene Sulfide with hard anodized black shell	4 Polyphenylene Sulfide with hard anodized black shell
A Pure Electro-Deposited Aluminum	A Pure Electro-Deposited Aluminum
K Zinc Nickel Plating	K Zinc Nickel Plating
T Nickel Polymer Plating	T Nickel Polymer Plating
SIZE	
XXX 009, 015, 021, 025, 031, 037, 051*	XXX 009, 015, 021, 025, 031, 037, 051*
CONTACTS	
TYPE CONTACTS/TERMINATIONS:	TYPE CONTACTS/TERMINATIONS:
37 Pin, vertical smt	21 Socket, straight, solder cup
	24 Socket, straight, .500" pigtails (.018 dia)
	25 Socket, straight, 1.000" pigtails (.018 dia)
	26 Socket, straight, crimped wire
PLATING OPTIONS:	PLATING OPTIONS:
5 50 µ" Au contacts; Sn/Pb alloy terminations ☒	1 50 µ" Au contacts (crimp wire)
7 50 µ" Au contacts; SAC305 terminations	3 50 µ" Au contacts: 10 µ" Au terminations (solder cup, pigtail)
	5 50 µ" Au contacts; Sn/Pb alloy terminations (pigtail) ☒
	7 50 µ" Au contacts; SAC305 terminations (pigtail)
HARDWARE	
STYLE OF HARDWARE:	STYLE OF HARDWARE:
00 None	00 None
22 Two fixed jacknut assemblies	22 Two fixed jacknut assemblies
41 Two turning jackscrews, allen head, retaining ring	41 Two turning jackscrews, allen head, retaining ring
99 Keying hardware, see options below	42 Two long turning jackscrews, allen head, retaining ring
	43 Two turning jackscrews, slot head, retaining ring
	44 Two long turning jackscrews, slot head, retaining ring
	45 Two turning jackscrews, allen head, captivated**
	99 Keying hardware, see options below
POLARIZATION / WIRING:	POLARIZATION / WIRING
00 None	00 None
	XX For wiring codes, see page MA-3 & MA-4
OPTIONS	
KPXX Two fixed jacknuts. See page MA-6 for keying options	KSXX Two turning jackscrews and interfacial sealing gasket. See page MA-6 for keying options
	900 Interfacial sealing gasket

* = 2 row, 51 position connectors are non-Mil Spec interface.
** = Captive hardware is factory installed and non-removable.

☒ = Option not RoHS compliant

AirBorn

Recommended PC Board Layout

Vertical Surface Mount

PLUG
PC BOARD LAYOUT
COMPONENT SIDE

CONNECTOR
MATING FACE*
(RECEPTACLE)

RECEPTACLE
PC BOARD LAYOUT
COMPONENT SIDE

* For pin (plug) connectors, the contact numbers are reversed left to right.

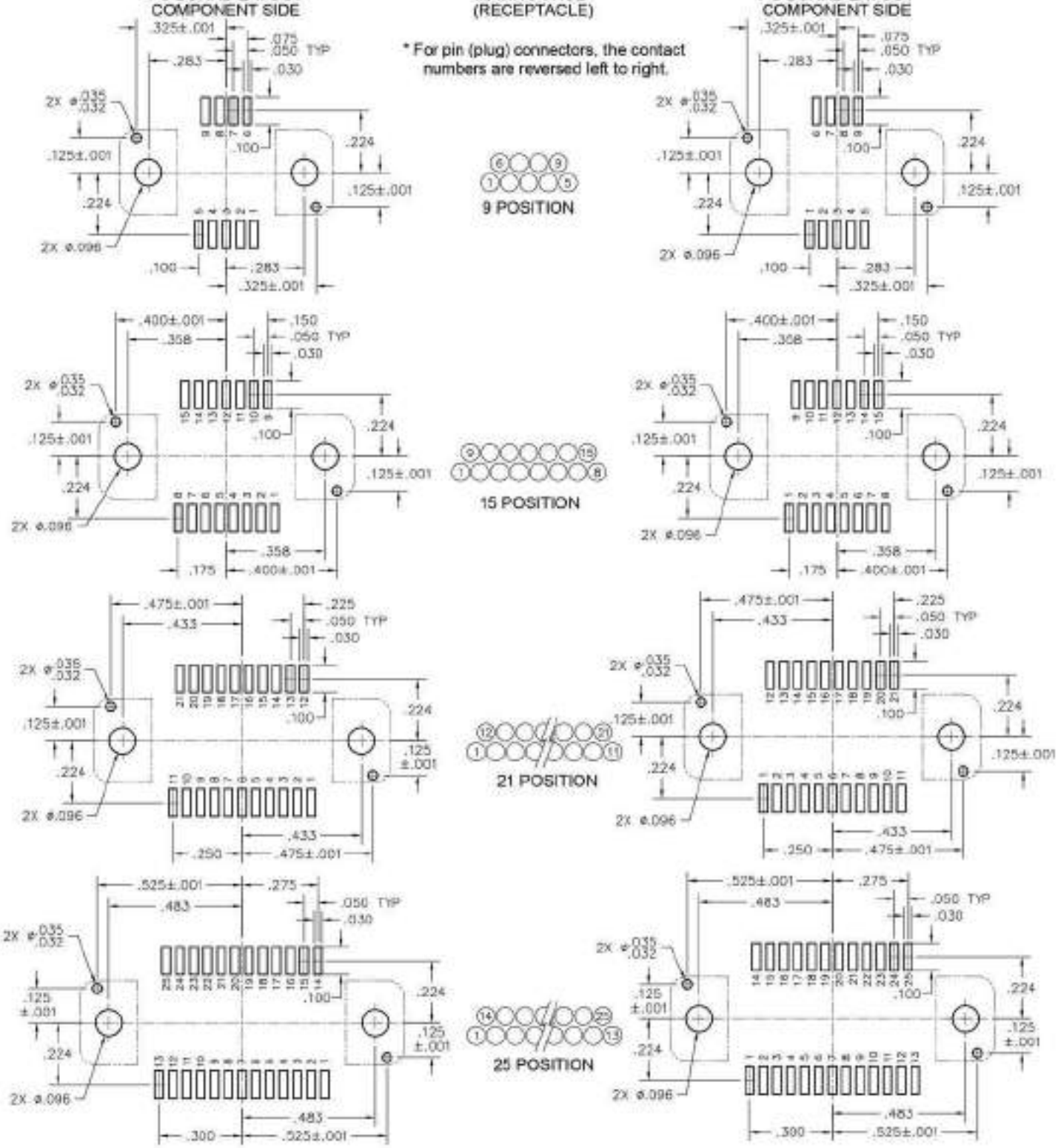

Recommended PC Board Layout

Vertical Surface Mount

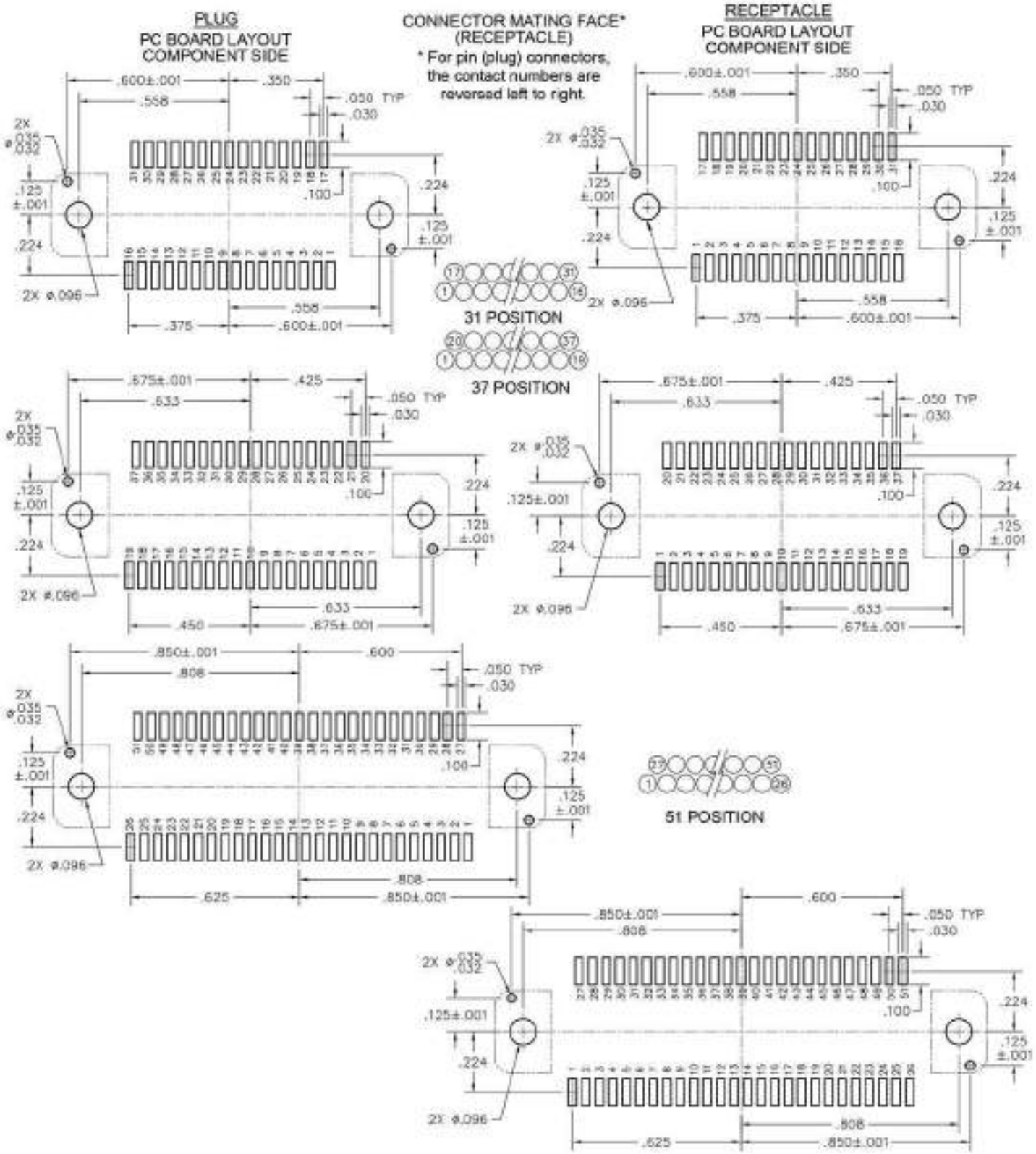

AirBorn

Card Edge Mount to Cable

.050"

9 thru 100 Contacts

Rugged Card Edge Mount

MK

Rugged Metal

MM

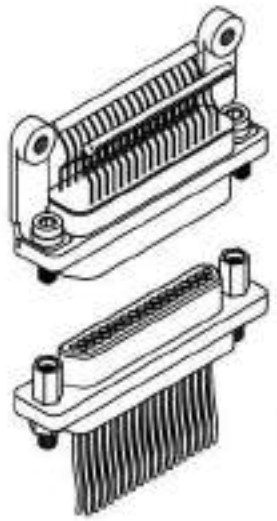

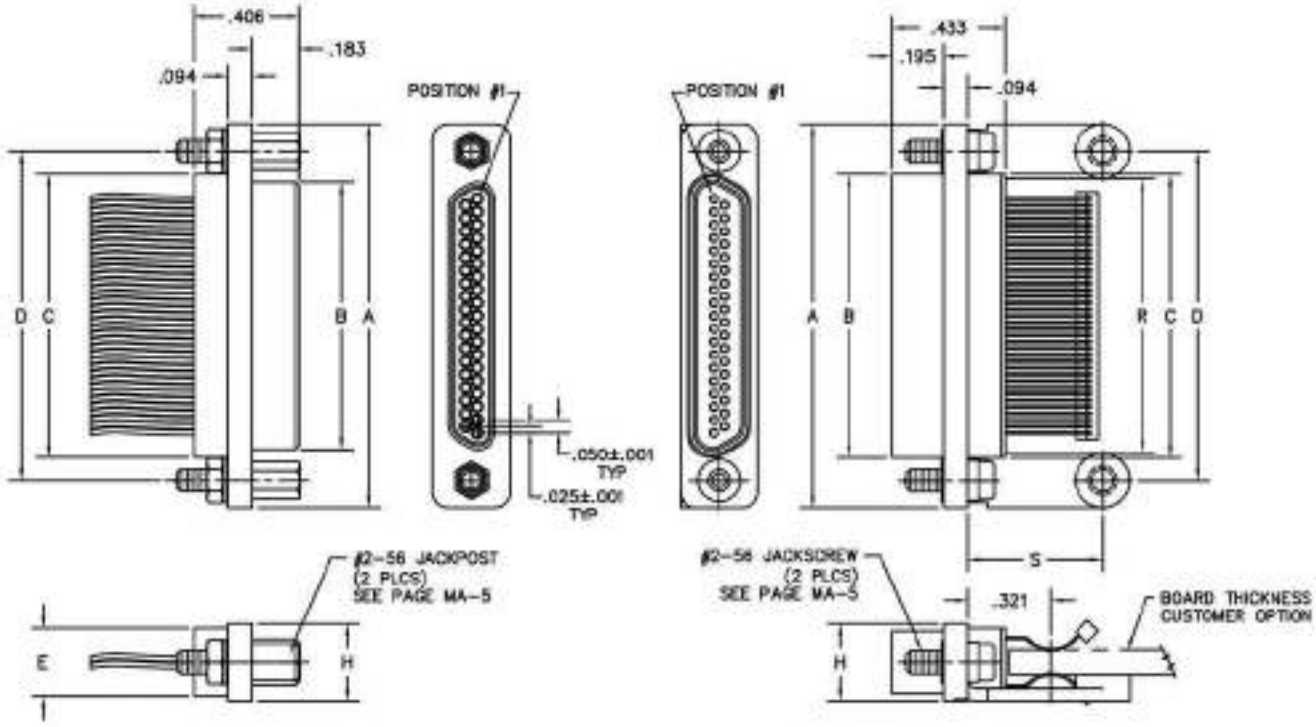

DIMENSIONS												
SIZE	CONTACT ROWS	A	B PLUG MAX	B RCPT MAX	C	D	E POTTING WELL MAX	H	HARDWARE	MOUNTING HOLES	R	S
9	2	.775	.334	.400	.390	.565	.270	.298	#2-56 UNC THD	#4-40 UNC THD	.355	.519
15		.925	.484	.550	.540	.715					.505	
21		1.075	.634	.700	.690	.865					.655	
25		1.175	.734	.800	.790	.965					.755	
31		1.325	.884	.950	.940	1.115					.905	
37		1.475	1.034	1.100	1.090	1.265					1.055	
51	3	1.425	.984	1.050	1.040	1.215	.310	.341			1.005	
69		1.725	1.284	1.350	1.340	1.515					1.309	
100	4	2.160	1.384	1.508	1.432	1.800	.360	.384	#4-40 UNC THD		1.514	.540

AirBorn

PLUG: MM–212–031–161–22WQ
RECEPTACLE: MK–2G2–031–275–460S–900
XX–XXX–XXX–XXX–XXXX–XXX

PLUG	RECEPTACLE
SERIES	
MM .050" Rugged Metal I/O Connector (MM mates with MK, ML, MM, MN receptacles)	MK .050" Rugged Metal Card Edge Mount (MK mates with MK, ML, MM, MN plugs)
BODY	
2 2-Row (Sizes 9 thru 37) 3 3-Row (Size 51 & 69) 4 4-Row (Size 100)	2 2-Row (Sizes 9 thru 37) 3 3-Row (Size 51 & 69) 4 4-Row (Size 100)
BODY STYLE: 1 Plug, straight, with ears	BODY STYLE: G Receptacle, straight, card edge with mounting brackets
BODY MATERIAL: 2 Polyphenylene Sulfide with electroless nickel shell 3 Polyphenylene Sulfide with electrodeposited cadmium shell ☒ 4 Polyphenylene Sulfide with hard anodized black shell A Pure Electro-Deposited Aluminum K Zinc Nickel Plating T Nickel Polymer Plating	BODY MATERIAL: 2 Polyphenylene Sulfide with electroless nickel shell 3 Polyphenylene Sulfide with electrodeposited cadmium shell ☒ 4 Polyphenylene Sulfide with hard anodized black shell A Pure Electro-Deposited Aluminum K Zinc Nickel Plating T Nickel Polymer Plating
SIZE	
XXX 009, 015, 021, 025, 031, 037, 051, 069, 100	XXX 009, 015, 021, 025, 031, 037, 051, 069, 100
CONTACTS	
TYPE CONTACTS/TERMINATIONS: 11 Pin, straight, solder cup 14 Pin, straight, .500" pigtails (.018 dia) 15 Pin, straight, 1.000" pigtails (.018 dia) 16 Pin, straight, crimped wire	TYPE CONTACTS/TERMINATIONS: 27 Socket, surface mount, .062-.094" pcb thickness (.010 dia) 28 Socket, surface mount, .109-.140" pcb thickness (.010 dia)
PLATING OPTIONS: 1 50 µ" Au contacts (crimp wire) 3 50 µ" Au contacts; 10 µ" Au terminations (solder cup, pigtail) 5 50 µ" Au contacts; Sn/Pb alloy terminations (pigtail) ☒ 7 50 µ" Au contacts; SAC305 terminations (pigtail)	PLATING OPTIONS: 5 50 µ" Au contacts; Sn/Pb alloy terminations ☒ 8 50 µ" Au contacts; Sn plated terminations
HARDWARE	
STYLE OF HARDWARE: 00 None 22 Two fixed jacknut assemblies (62*) 41 Two turning jackscrews, allen head, retaining ring (81*) 42 Two long turning jackscrews, allen head, retaining ring (82*) 43 Two turning jackscrews, slot head, retaining ring (83*) 44 Two long turning jackscrews, slot head, retaining ring (84*) 45 Two turning jackscrews, allen head, captivated** (85*)	STYLE OF HARDWARE: 32 Two fixed jacknut assemblies (72*) 46 Two turning jackscrews, allen head, captivated** (86*)
POLARIZATION / WIRING: 00 None XX For wiring codes, see page MA-3 & MA-4	POLARIZATION / WIRING 0S Standard Body Polarization
OPTIONS	
	900 Interfacial sealing gasket

* = Use number in parenthesis when ordering size 100.
** = Captive hardware is factory installed and non-removable.

☒ = Option not RoHS compliant

AirBorn

Card Edge Mount to Cable

.050"

9 thru 100 Contacts

Rugged Card Edge Mount

MK

Rugged Metal

MM

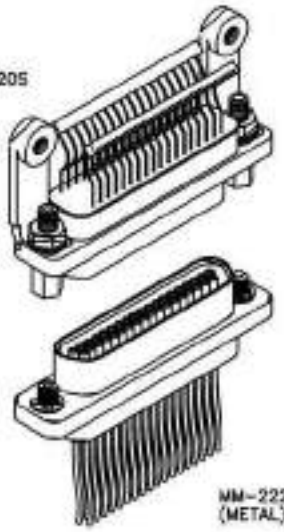

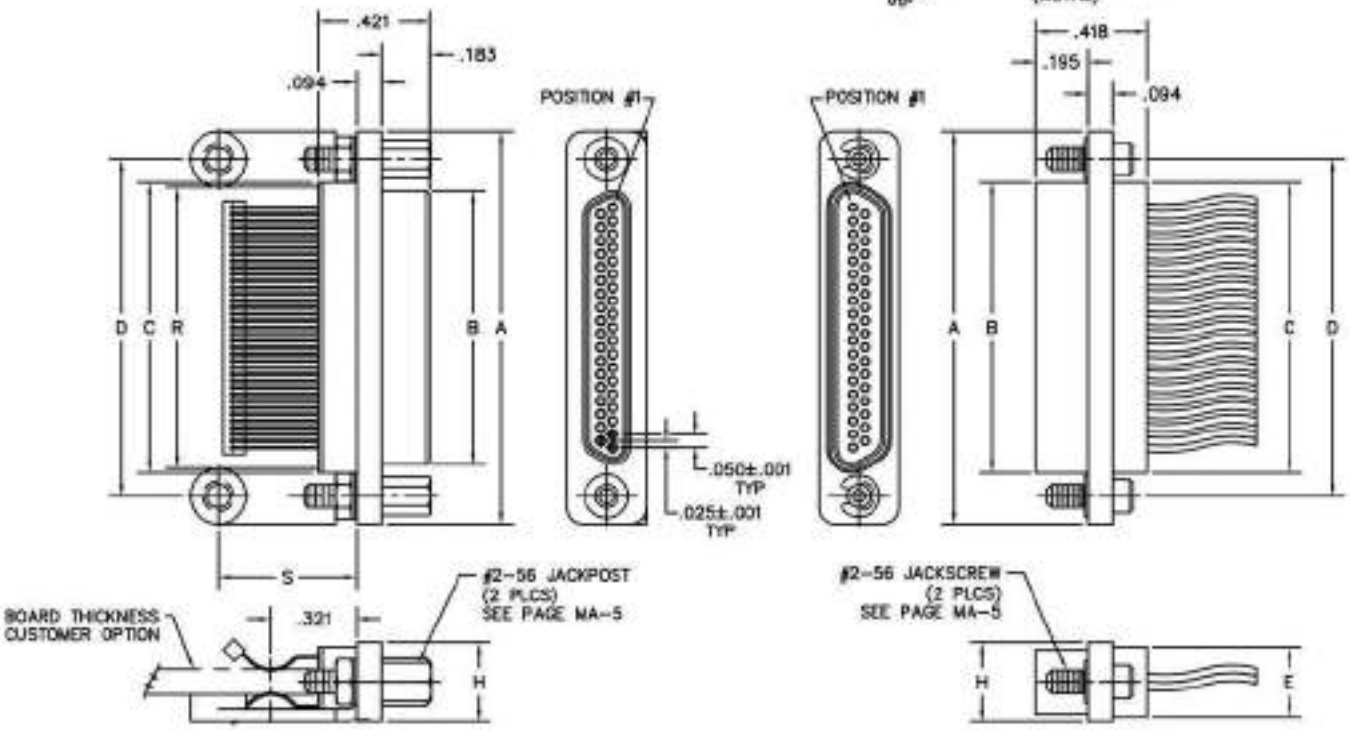

PLUG RECEPTACLE

DIMENSIONS												
SIZE	CONTACT ROWS	A	B PLUG MAX	B RCPT MAX	C	D	E POTTING WELL MAX	H	HARDWARE	MOUNTING HOLES	R	S
9	2	.775	.334	.400	.390	.565	.270	.298	#2-56 UNC THD	#4-40 UNC THD	.355	.519
15		.925	.484	.550	.540	.715					.505	
21		1.075	.634	.700	.690	.865					.655	
25		1.175	.734	.800	.790	.965					.755	
31		1.325	.884	.950	.940	1.115					.905	
37		1.475	1.034	1.100	1.090	1.265					1.055	
51	3	1.425	.984	1.050	1.040	1.215	.310	.341			1.005	
69		1.725	1.284	1.350	1.340	1.515					1.309	
100	4	2.160	1.384	1.508	1.432	1.800	.380	.384	#4-40 UNC THD		1.514	.540

AirBorn

PLUG: MK–2F2–031–175–320S
RECEPTACLE: MM–222–031–261–41WQ–900
XX–XXX–XXX–XXX–XXXX–XXX

PLUG	RECEPTACLE
SERIES	
MK .050" Rugged Metal Card Edge Mount Connector (MK mates with MK, ML, MM, MN receptacles)	MM .050" Rugged Metal I/O Connector (MM mates with MK, ML, MM, MN plugs)
BODY	
2 2-Row (Sizes 9 thru 37) 3 3-Row (Size 51 & 69) 4 4-Row (Size 100)	2 2-Row (Sizes 9 thru 37) 3 3-Row (Size 51 & 69) 4 4-Row (Size 100)
BODY STYLE: F Plug, straight, card edge, with mounting brackets	BODY STYLE: 2 Receptacle, straight, with ears
BODY MATERIAL: 2 Polyphenylene Sulfide with electroless nickel shell 3 Polyphenylene Sulfide with electrodeposited cadmium shell ☒ 4 Polyphenylene Sulfide with hard anodized black shell A Pure Electro-Deposited Aluminum K Zinc Nickel Plating T Nickel Polymer Plating	BODY MATERIAL: 2 Polyphenylene Sulfide with electroless nickel shell 3 Polyphenylene Sulfide with electrodeposited cadmium shell ☒ 4 Polyphenylene Sulfide with hard anodized black shell A Pure Electro-Deposited Aluminum K Zinc Nickel Plating T Nickel Polymer Plating
SIZE	
XXX 009, 015, 021, 025, 031, 037, 051, 069, 100	XXX 009, 015, 021, 025, 031, 037, 051, 069, 100
CONTACTS	
TYPE CONTACTS/TERMINATIONS: 17 Pin, surface mount, .062-.094 pcb thickness (.010 dia) 18 Pin, surface mount, .109-.140 pcb thickness (.010 dia)	TYPE CONTACTS/TERMINATIONS: 21 Socket, straight, solder cup 24 Socket, straight, .500" pigtails (.018 dia) 25 Socket, straight, 1.000" pigtails (.018 dia) 26 Socket, straight, crimped wire
PLATING OPTIONS: 5 50 µ" Au contacts; Sn/Pb alloy terminations ☒ 8 50 µ" Au contacts; Sn plated terminations	PLATING OPTIONS: 1 50 µ" Au contacts (crimp wire) 3 50 µ" Au contacts; 10 µ" Au terminations (solder cup, pigtail) 5 50 µ" Au contacts; Sn/Pb alloy terminations (pigtail) ☒ 7 50 µ" Au contacts; SAC305 terminations (pigtail)
HARDWARE	
STYLE OF HARDWARE: 32 Two fixed jacknut assemblies (72*) 46 Two turning jackscrews, allen head, captivated** (86*)	STYLE OF HARDWARE: 00 None 22 Two fixed jacknut assemblies (62*) 41 Two turning jackscrews, allen head, retaining ring (81*) 42 Two long turning jackscrews, allen head, retaining ring (82*) 43 Two turning jackscrews, slot head, retaining ring (83*) 44 Two long turning jackscrews, slot head, retaining ring (84*) 45 Two turning jackscrews, allen head, captivated** (85*)
POLARIZATION / WIRING: 0S Standard Body Polarization	POLARIZATION / WIRING 00 None XX For wiring codes, see page MA-3 & MA-4
OPTIONS	
	900 Interfacial sealing gasket

* = Use number in parenthesis when ordering size 100.
** = Captive hardware is factory installed and non-removable.

☒ = Option not RoHS compliant

AirBorn

Recommended PC Board Layout

Card Edge Mount
Standard Polarization

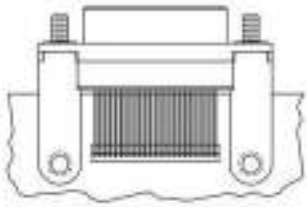

PC BOARD LAYOUT
CIRCUIT SIDE

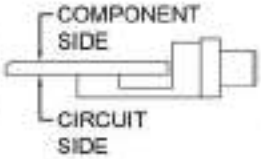

CONNECTOR MATING FACE

PLUG
PC BOARD LAYOUT
COMPONENT SIDE

PLUG
PC BOARD LAYOUT
CIRCUIT SIDE

CONNECTOR MATING FACE

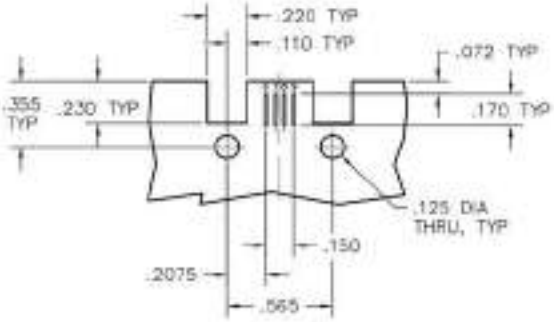

9 POSITION

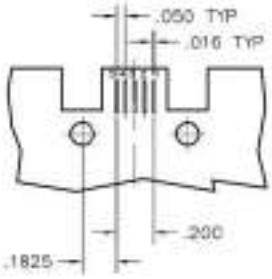

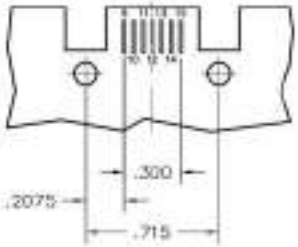

15 POSITION

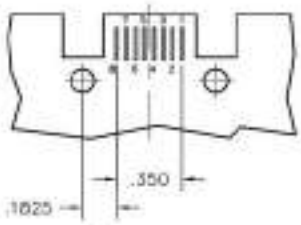

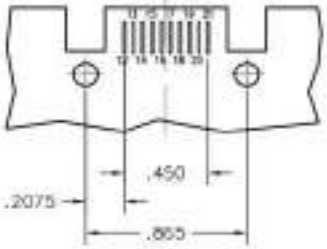

21 POSITION

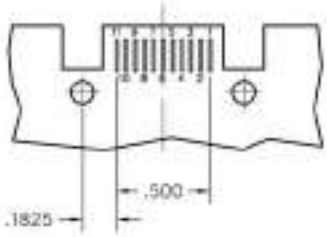

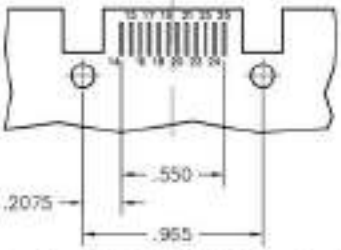

25 POSITION

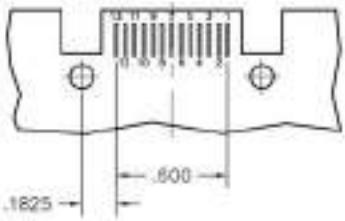

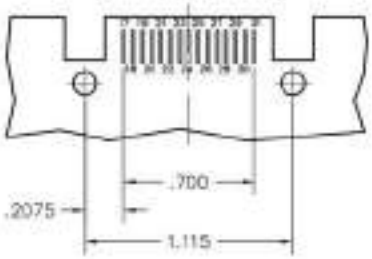

31 POSITION

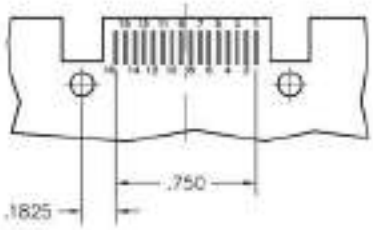

AirBorn

Recommended PC Board Layout

Card Edge Mount
Standard Polarization

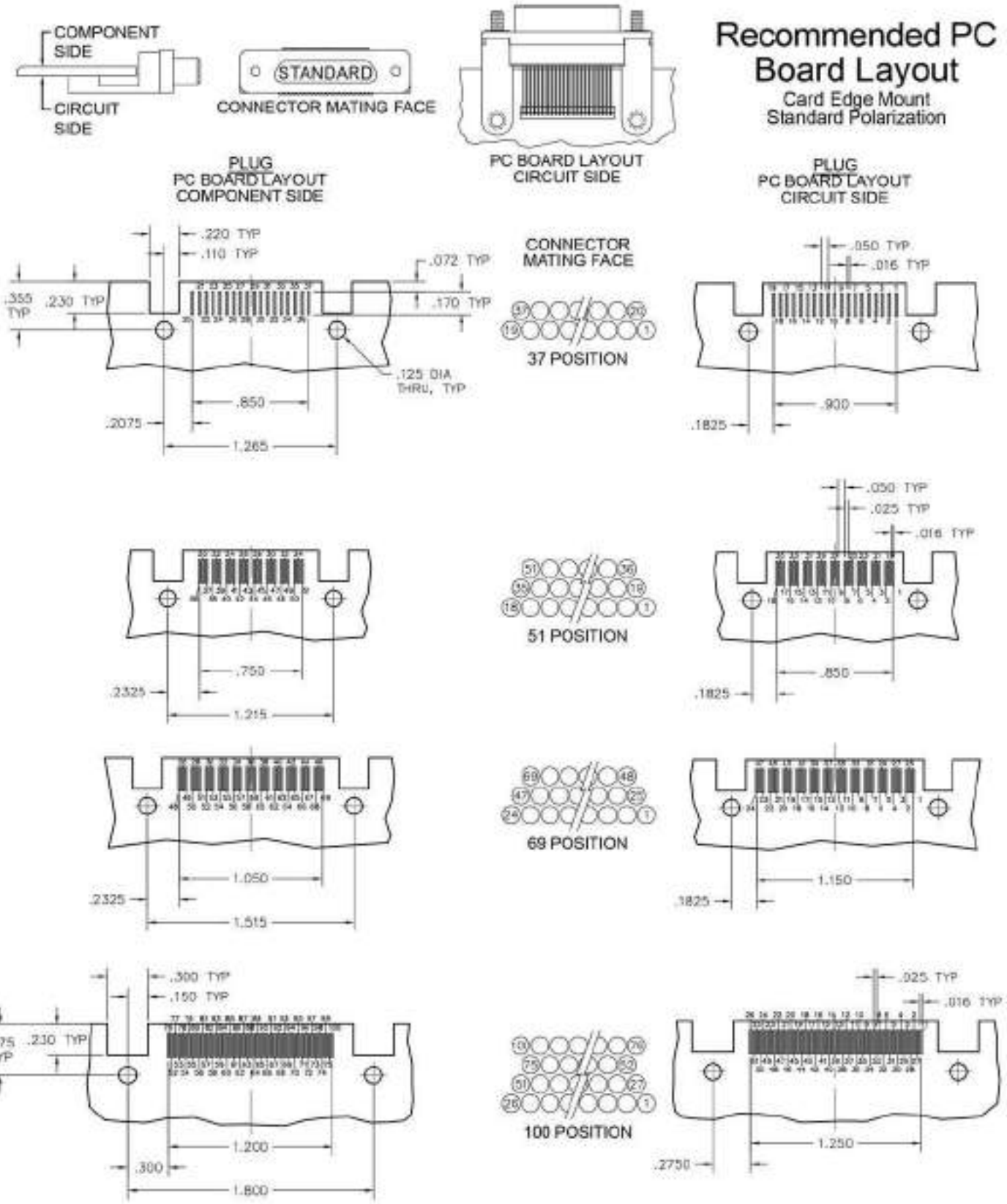

AirBorn

Recommended PC Board Layout

Card Edge Mount
Standard Polarization

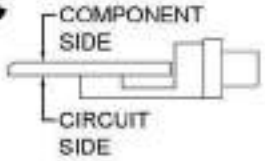

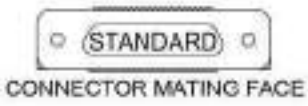

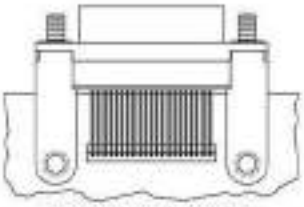

PC BOARD LAYOUT
CIRCUIT SIDE
RECEPTACLE

RECEPTACLE
PC BOARD LAYOUT
COMPONENT SIDE

RECEPTACLE
PC BOARD LAYOUT
CIRCUIT SIDE

CONNECTOR
MATING FACE

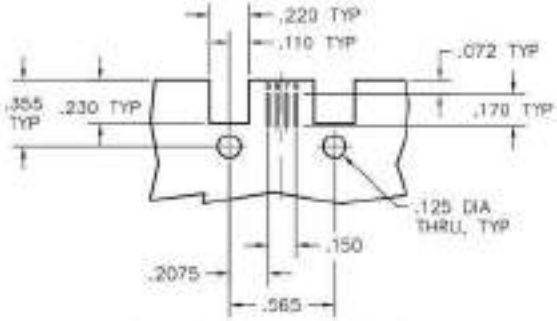

9 POSITION

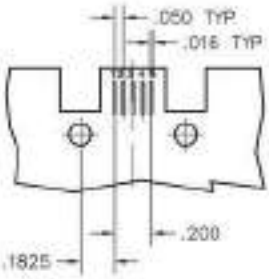

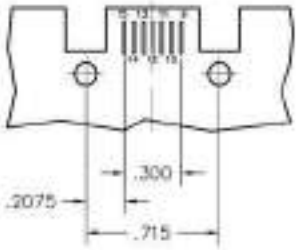

15 POSITION

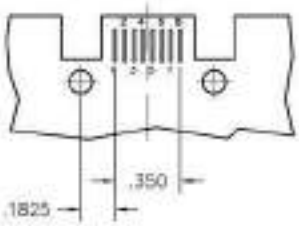

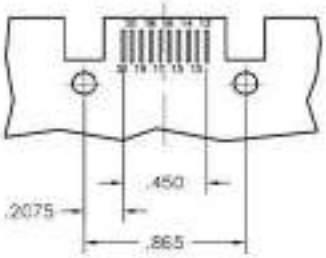

21 POSITION

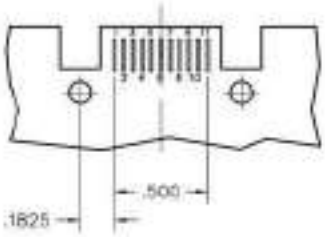

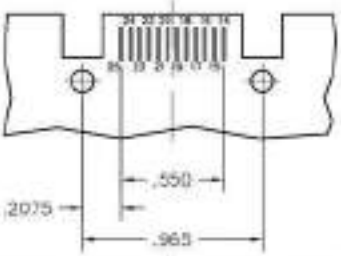

25 POSITION

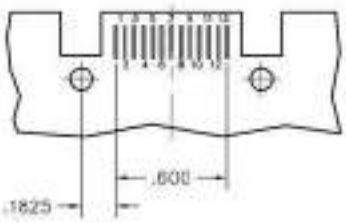

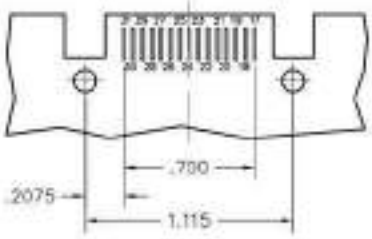

31 POSITION

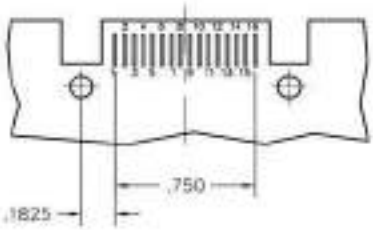

AirBorn

Recommended PC Board Layout

Card Edge Mount
Standard Polarization

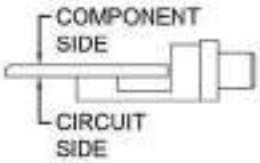

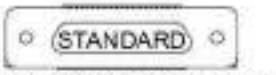

CONNECTOR MATING FACE

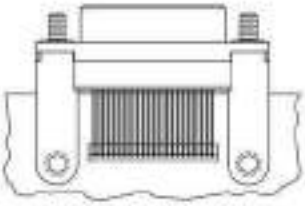

PC BOARD LAYOUT
CIRCUIT SIDE

RECEPTACLE
PC BOARD LAYOUT
COMPONENT SIDE

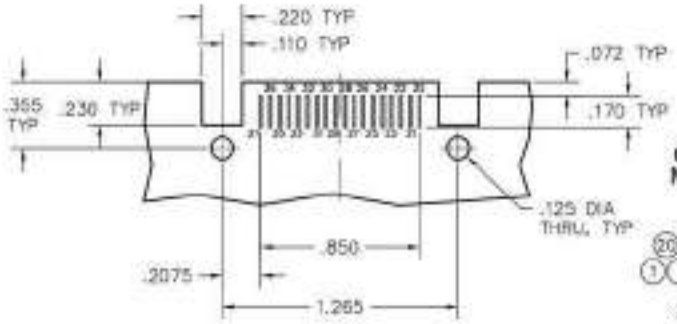

CONNECTOR MATING FACE

37 POSITION

RECEPTACLE
PC BOARD LAYOUT
CIRCUIT SIDE

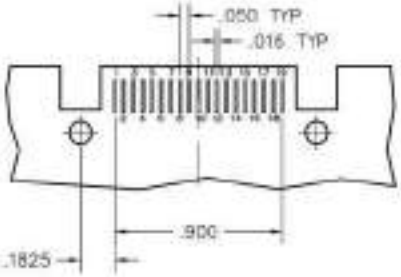

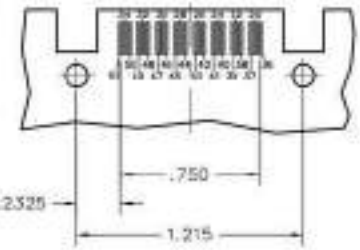

51 POSITION

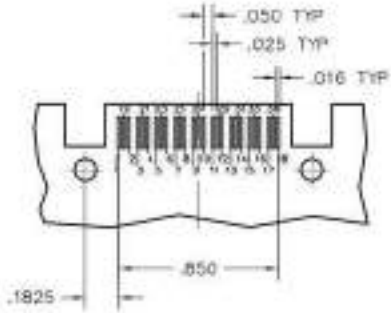

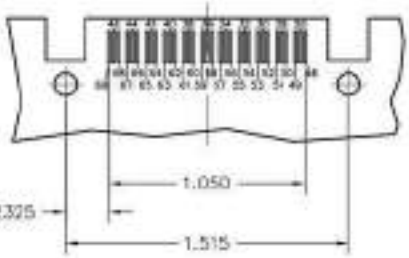

69 POSITION

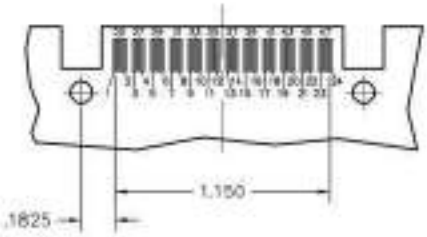

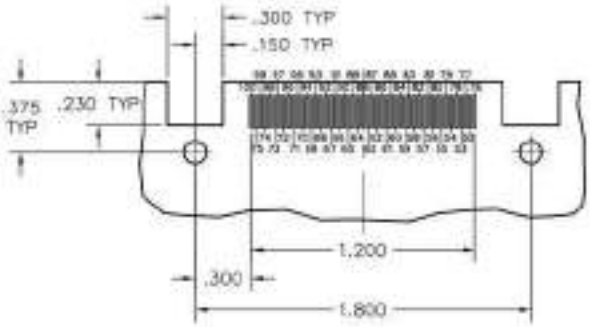

100 POSITION

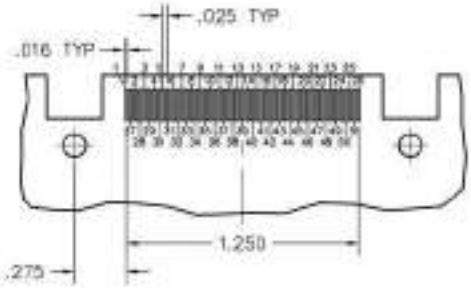

AirBorn

Filtered Cable Connectors

.050"

9 thru 37 Contacts

Rugged Metal

MF

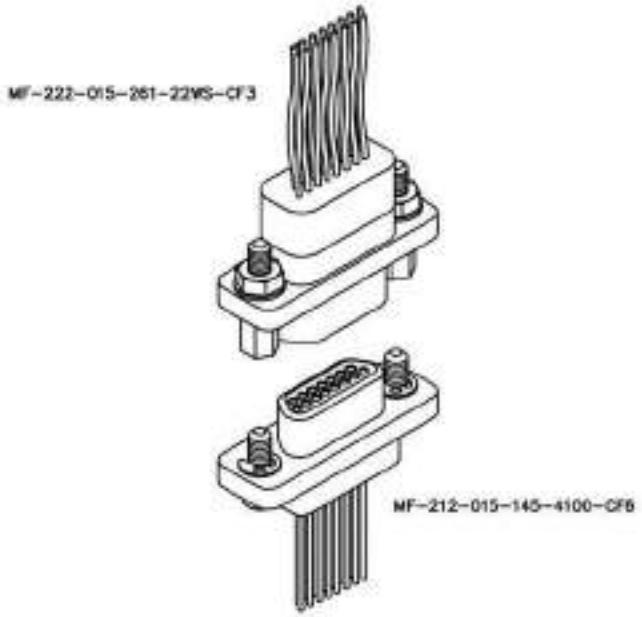

Electrical Data

Dielectric Withstanding Voltage (DWV): 300 VDC
Insulation Resistance: 5000 Megohms @ 100 VDC
Working Voltage (WV): 100 VDC
Current Rating: 3 Amps

Application Notes

1. Hipot voltage must not exceed working voltage.
2. Maximum solder tinning temperature is 275° C while maintaining a tinning dwell of 5 seconds max.
3. Maximum solder station temperature is 360° C while maintaining a soldering dwell of less than 5 seconds.
4. Temperature exceeding 150° C should never be applied to the entire connector. Failure to adhere to these guidelines may result in damage to connector or significantly reduced operating characteristics.

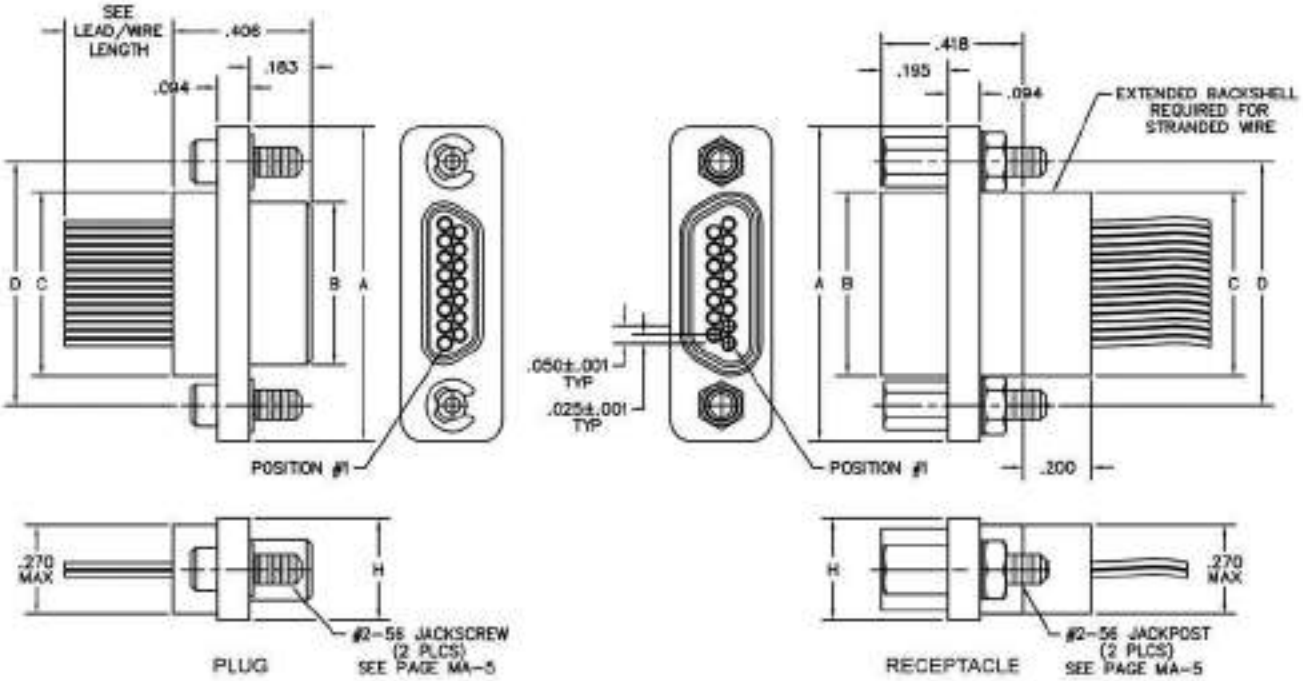

DIMENSIONS								
SIZE	CONTACT ROWS	A	B PLUG MAX	B RCPT MAX	C	D	H	HARDWARE
9	2	.775	.334	.400	.390	.565	.298	#2-56 UNC THD (.092 DIA THRU)
15		.925	.484	.550	.540	.715		
21		1.075	.634	.700	.690	.865		
25		1.175	.734	.800	.790	.965		
31		1.325	.884	.950	.940	1.115		
37		1.475	1.034	1.100	1.090	1.265		

AirBorn

PLUG: MF–212–015–145–4100–CF6
RECEPTACLE: MM–222–031–2G3–4500
PLUG: MF–212–031–1G3–4500
RECEPTACLE: MF–222–015–261–22WS–CF3

XX–XXX–XXX–XXX–XXXX–XXX

PLUG	RECEPTACLE
SERIES	
MF .050" Rugged Metal I/O Connector (MF mates with MK, ML, MM, MN receptacles)	MF .050" Rugged Metal I/O Connector (MF mates with MK, ML, MM, MN plugs)
BODY	
2 2-Row (Sizes 9 thru 37)	2 2-Row (Sizes 9 thru 37)
BODY STYLE:	BODY STYLE:
1 Plug, straight, with ears	2 Receptacle, straight, with ears & interfacial seal
BODY MATERIAL:	BODY MATERIAL:
2 Polyphenylene Sulfide with electroless nickel shell	2 Polyphenylene Sulfide with electroless nickel shell
3 Polyphenylene Sulfide with electrodeposited cadmium shell ☒	3 Polyphenylene Sulfide with electrodeposited cadmium shell ☒
SIZE	
XXX 009, 015, 021, 025, 031, 037	XXX 009, 015, 021, 025, 031, 037
CONTACTS	
TYPE CONTACTS/TERMINATIONS:	TYPE CONTACTS/TERMINATIONS:
1D Pin, straight, .109" Lead Length (.018 dia) SEE NOTE 1	2D Socket, straight, .109" Lead Length (.018 dia)
1E Pin, straight, .125" Lead Length (.018 dia) SEE NOTE 1	2E Socket, straight, .125" Lead Length (.018 dia)
1F Pin, straight, .140" Lead Length (.018 dia) SEE NOTE 1	2F Socket, straight, .140" Lead Length (.018 dia)
12 Pin, straight, .150" Lead Length (.018 dia) SEE NOTE 1	22 Socket, straight, .150" Lead Length (.018 dia)
1G Pin, straight, .156" Lead Length (.018 dia) SEE NOTE 1	2G Socket, straight, .156" Lead Length (.018 dia)
1H Pin, straight, .172" Lead Length (.018 dia) SEE NOTE 1	2H Socket, straight, .172" Lead Length (.018 dia)
1J Pin, straight, .187" Lead Length (.018 dia) SEE NOTE 1	2J Socket, straight, .187" Lead Length (.018 dia)
13 Pin, straight, .250" Lead Length (.018 dia) SEE NOTE 1	23 Socket, straight, .250" Lead Length (.018 dia)
1K Pin, straight, .375" Lead Length (.018 dia) SEE NOTE 1	2K Socket, straight, .375" Lead Length (.018 dia)
14 Pin, straight, .500" pigtails (.018 dia) SEE NOTE 1	2L Socket, straight, .500" Lead Length (.018 dia)
15 Pin, straight, 1.000" pigtails (.018 dia) SEE NOTE 1	2M Socket, straight, 1.000" Lead Length (.018 dia)
16 Pin, straight, stranded wire	24 Socket, straight, .500" pigtails (.018 dia) SEE NOTE 1
	25 Socket, straight, 1.000" pigtails (.018 dia) SEE NOTE 1
	26 Socket, straight, stranded wire
PLATING OPTIONS:	PLATING OPTIONS:
1 50 µ" Au contacts (stranded wire) ☒	1 50 µ" Au contacts (stranded wire) ☒
3 50 µ" Au contacts; 10 µ" Au terminations (pigtails)	3 50 µ" Au contacts; 10 µ" Au terminations (pigtails)
5 50 µ" Au contacts; Sn/Pb alloy terminations (pigtails) ☒	5 50 µ" Au contacts; Sn/Pb alloy terminations (pigtails) ☒
HARDWARE	
STYLE OF HARDWARE:	STYLE OF HARDWARE:
00 None	00 None
22 Two fixed jacknut assemblies	22 Two fixed jacknut assemblies
41 Two turning jackscrews, allen head, retaining ring	41 Two turning jackscrews, allen head, retaining ring
42 Two long turning jackscrews, allen head, retaining ring	42 Two long turning jackscrews, allen head, retaining ring
43 Two turning jackscrews, slot head, retaining ring	43 Two turning jackscrews, slot head, retaining ring
44 Two long turning jackscrews, slot head, retaining ring	44 Two long turning jackscrews, slot head, retaining ring
45 Two turning jackscrews, allen head, captivated**	45 Two turning jackscrews, allen head, captivated**
WIRING:	WIRING:
00 None	00 None
XX For wiring codes, see page MA-3 & MA-4	XX For wiring codes, see page MA-3 & MA-4
CAPACITOR DESIGNATOR	
XXX See tables below	XXX See tables below

** = Captive hardware is factory installed and non-removable.
☒ = Option not RoHS compliant

NOTE 1 = The leads on these contacts are soft copper suitable for forming.

CERAMIC CHIP CAPACITOR FILTERS

CAPACITOR DESIGNATOR	CAP RANGE (pF)	MINIMUM INSERTION LOSS (DECIBELS)			
		10 MHz	15 MHz	30 MHz	50 MHz
CF1 ☒	150–250	—	—	1	4
CF2 ☒	300–500	1	2	5	8
CF3 ☒	700–1000	3	6	10	10
CF4 ☒	1300–2000	6	10	15	20
CF5 ☒	4000–5400	13	15	20	27
CF6 ☒	8500–11500	18	20	25	30

PLANAR CAPACITOR FILTERS

CAPACITOR DESIGNATOR	CAP RANGE (pF)	MINIMUM INSERTION LOSS (DECIBELS)			
		10 MHz	100 MHz	500 MHz	1 GHz
PF1 ☒	150–250	—	8	33	36
PF2 ☒	300–500	—	13	37	44
PF3 ☒	700–1000	2	19	42	42
PF4 ☒	1300–2000	8	25	45	45
PF5 ☒	4000–5400	14	34	41	41
PF6 ☒	8500–11500	20	36	43	43

Minimum no load attenuation (in 50 Ohm system, 25° C)

AirBorn

Specifications - Hybrid Connectors

Materials and Finishes *

Contacts:	Pins: BeCu alloy strip per ASTM B194 Sockets: Brass per ASTM B121 / B121M or ASTM B16 / B16M or ASTM B453 Power: Copper based alloy selected for power applications
Contact Finish:	Gold plate per ASTM B488
Shells:	Aluminum Alloy 6061-T6 per SAE AMS-QQ-A-250/11 or 6061-T6511 per SAE AMS-QQ-A-200/8
Aluminum Shell Finishes:	Electroless Nickel per SAE AMS2404, Class 3, 500 µ" min Electrodeposited Cadmium per SAE AMS-QQ-P-416, Type II, Class 3
Molded Insulators:	Glass filled polyphenylene sulfide per MIL-M-24519
Embedment:	Frey Engineering Co. insulating compound CF3003-80 and L-II-49 or equivalent
Jackscrews, Jackposts and Nuts:	Corrosion resistant steel per ASTM A320 or ASTM A484 / A484M and ASTM A582 / A582 Passivated per SAE AMS2700
Clips and Washers:	Corrosion resistant steel per ASME 18.24 or NASM35333 (For reference only: ASME 18.24 CRS per ASTM A693 and NASM35333 CRS per ASTM A240) Passivated per ASME 18.24 or NASM35333 (For reference only: ASME 18.24 and NASM35333 passivated per SAE AMS2700)
Interfacial Seal Gaskets:	Fluorosilicone per SAE AMS-R-25988
Tolerances:	Unless otherwise specified: Fractions = ±1/64" Decimals = ±.010" Angles = ±5° Wire lengths: insulated/stranded = +1.0"/-0.0"

Note: AirBorn can manufacture special configurations for your exact specifications.

* = Reference the above listed specifications or an equivalent industry standard when applicable

AirBorn

Performance - Hybrid Connectors
Reference MIL-DTL-83513

Contact Rating:	3-amperes maximum for signal and coax contacts 13-amperes maximum for power contacts
Solderability:	Terminals (except crimp) tested in accordance with MIL-STD-202, Method 208
Wire Size:	Stranded #16 AWG standard for power contacts RG316 or RG178 standard for coax contacts Stranded #24-#28 AWG standard (consult factory for other sizes and types)
Test Voltage:	600 V, RMS, 60 Hz
Operating Temperature:	-55° C to +125° C
Insulation Resistance:	5,000 megohms minimum @ 500 VDC
Durability:	500 connector mating cycles
Vibration:	Tested in accordance with MIL-STD-1344, Method 2005, Condition IV, according to MIL-83513
Shock:	Tested in accordance with MIL-STD-1344, Method 2004, Condition E, according to MIL-83513
Salt Spray:	Mated connectors tested in accordance with MIL-STD-1344, Method 1001, Test Condition B
Humidity:	Mated connectors tested in accordance with MIL-STD-1344, Method 1002, Type II (except steps 7a and 7b)
Thermal Shock:	Tested to the temperature extremes of MIL-STD-1344, Method 1003, Test Condition A (except step 3, temperature shall be 125° C)

AirBorn

Cable to Cable Hybrid

.050"

7 or 24 Contacts

Rugged Metal

MM

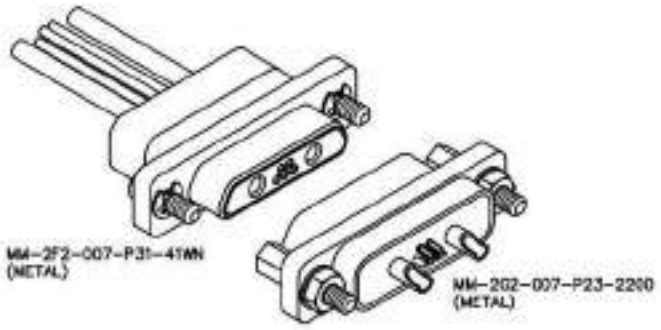

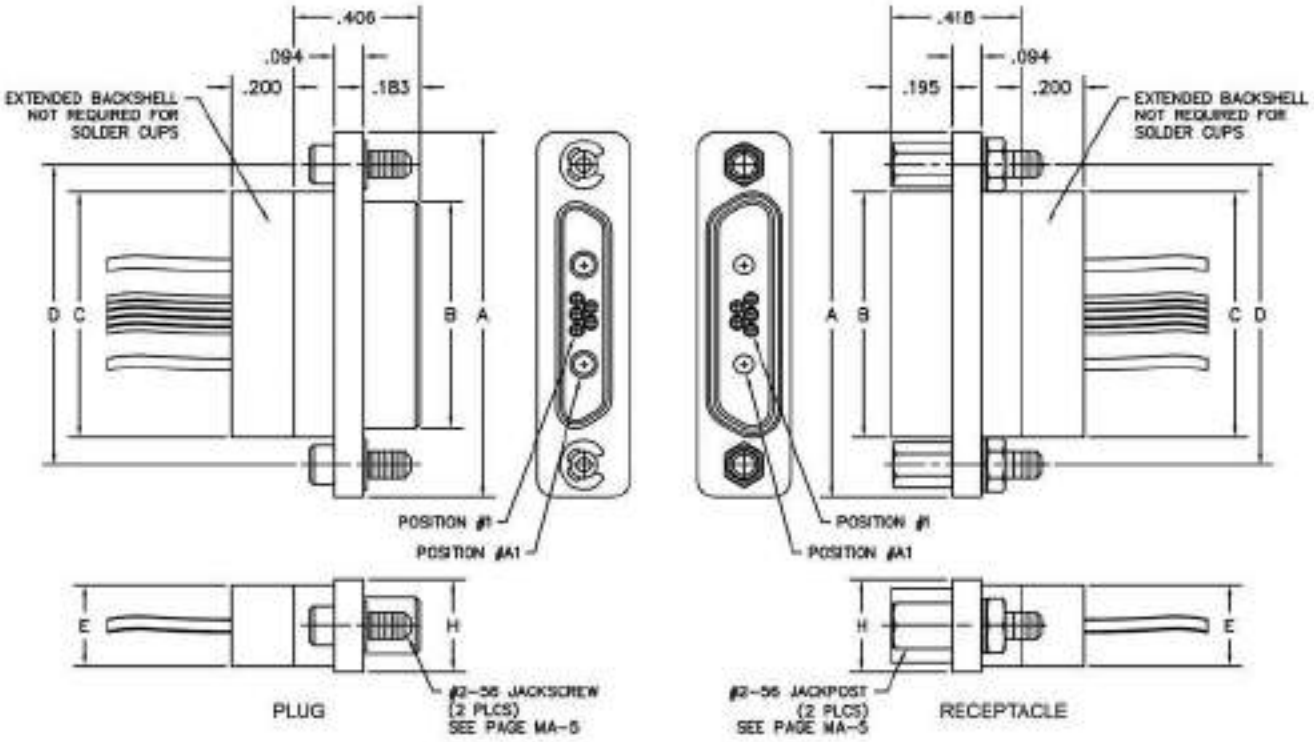

DIMENSIONS									
SIZE	CONTACT ROWS	A	B		C	D	E	H	HARDWARE
			PLUG MAX	RCPT MAX			POTTING WELL MAX		
7	2	1.175	.734	.800	.790	.965	.270	.298	#2-56 UNC THD (.092 DIA THRU)
24	3	1.425	.984	1.050	1.040	1.215	.310	.341	

INTERFACE DIMENSIONS

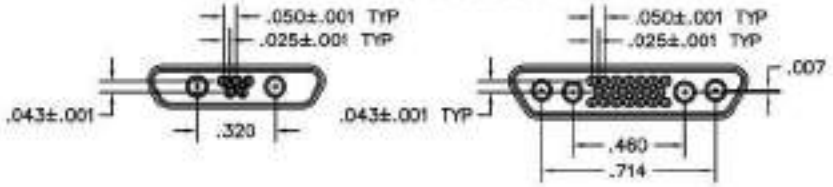

PLUG: MM-2F2-007-P31-41WN
RECEPTACLE: MM-2G2-007-P41-22WS
XX-XXX-XXX-XXX-XXXX

PLUG	RECEPTACLE
SERIES	
MM .050" Rugged Metal Connector	MM .050" Rugged Metal Connector
BODY	
2 2-Row (Size 7) 3 3-Row (Size 24)	2 2-Row (Size 7) 3 3-Row (Size 24)
BODY STYLE: F Plug, straight, with ears	BODY STYLE: G Receptacle, straight, with ears & interfacial seal
BODY MATERIAL: 2 Polyphenylene Sulfide with electroless nickel shell 3 Polyphenylene Sulfide with electrodeposited cadmium shell ☒	BODY MATERIAL: 2 Polyphenylene Sulfide with electroless nickel shell 3 Polyphenylene Sulfide with electrodeposited cadmium shell ☒
SIZE	
007 2 Power or Coax and 5 Signal 024 4 Power or Coax and 20 Signal	007 2 Power or Coax and 5 Signal 024 4 Power or Coax and 20 Signal
CONTACTS	
TYPE CONTACTS/TERMINATIONS: P1 Solder cup, power connector P3 Crimped wire, Power contacts M16878/4-16-9, length per wire code. C3 Crimped wire, Coax RG316, length per wire code C5 Crimped wire, Coax RG178, length per wire code Note: Plug connector has pin signal contacts and socket power/coax contacts.	TYPE CONTACTS/TERMINATIONS: P2 Solder cup, power connector P4 Crimped wire, Power contacts M16878/4-16-9, length per wire code. C4 Crimped wire, Coax RG316, length per wire code C6 Crimped wire, Coax RG178, length per wire code Note: Receptacle connector has socket signal contacts and pin power/coax contacts.
PLATING OPTIONS: 1 50 µ" Au contacts (crimp wire) 3 50 µ" Au contacts: 10 µ" Au terminations (solder cup, power connectors only)	PLATING OPTIONS: 1 50 µ" Au contacts (crimp wire) 3 50 µ" Au contacts: 10 µ" Au terminations (solder cup, power connectors only)
HARDWARE	
STYLE OF HARDWARE: 00 None 22 Two fixed jacknut assemblies 41 Two turning jackscrews, allen head, retaining ring 42 Two long turning jackscrews, allen head, retaining ring 43 Two turning jackscrews, slot head, retaining ring 44 Two long turning jackscrews, slot head, retaining ring 45 Two turning jackscrews, allen head, captivated**	STYLE OF HARDWARE: 00 None 22 Two fixed jacknut assemblies 41 Two turning jackscrews, allen head, retaining ring 42 Two long turning jackscrews, allen head, retaining ring 43 Two turning jackscrews, slot head, retaining ring 44 Two long turning jackscrews, slot head, retaining ring 45 Two turning jackscrews, allen head, captivated**
WIRING: 00 None XX For wiring codes, see page MA-3 & MA-4	WIRING 00 None XX For wiring codes, see page MA-3 & MA-4

** = Captive hardware is factory installed and non-removable.

☒ = Option not RoHS compliant

AirBorn

Circular Cable Connectors

.050"

7 & 19 Contacts

Rugged Metal

MC

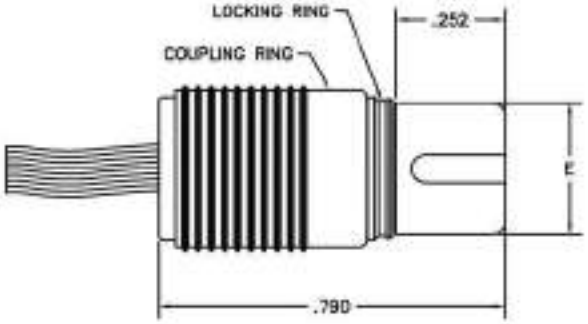

PLUG
(Socket Contacts)

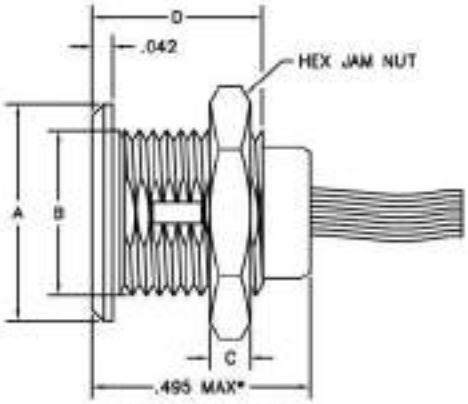

RECEPTACLE
FRONT PANEL MOUNT
(Pin Contacts)

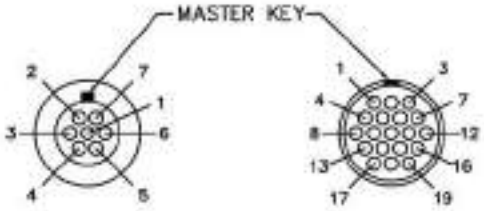

7 CONTACTS

19 CONTACTS

Contact Arrangements
Face view, receptacle (Pin contacts)
Cavity identification numbers are for reference and do not appear on connector.

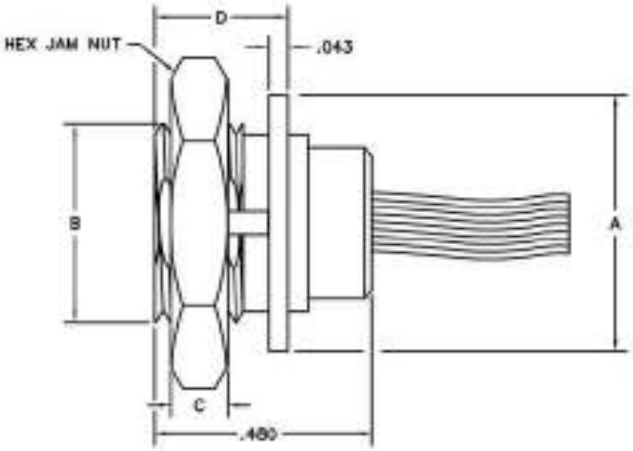

RECEPTACLE
REAR PANEL MOUNT
(Pin Contacts)

DIMENSIONS (RECEPTACLE)					
MOUNT	BODY	A MAX DIA	B THREAD	C NUT	D
FRONT PANEL	1 (7 POS)	.510	3/8-32 UNEF-2A	.093	.388
FRONT PANEL	2 (19 POS)	.575	1/2-28 UNEF-2A	.125	.340
REAR PANEL	1 (7 POS)	.575	7/16-28 UNEF-2A	.093	.293
REAR PANEL	2 (19 POS)	.575	1/2-28 UNEF-2A	.125	.305

* = .530 MAX FOR SOLDER CUP CONNECTORS

DIMENSIONS (PLUG)	
BODY	E MAX DIA
1 (7 POS)	.305
2 (19 POS)	.405

PLUG: MC–111–007–161–00WN
RECEPTACLE: MC–121–007–261–00WN
XX–XXX–XXX–XXX–XXXX

PLUG	RECEPTACLE
SERIES	
MC .050" Circular Connector	MC .050" Circular Connector
BODY	
1 7 position shell 2 19 position shell	1 7 position shell 2 19 position shell
BODY STYLE: 1 Quick disconnect	BODY STYLE: 2 Front mount, quick disconnect 4 Rear mount, quick disconnect
BODY MATERIAL: 1 Polyphenylene Sulfide insulator, brass shell with electroless nickel plating	BODY MATERIAL: 1 Polyphenylene Sulfide insulator, brass shell with electroless nickel plating
SIZE	
XXX 007, 019	XXX 007, 019
CONTACTS	
TYPE CONTACTS/TERMINATIONS: 14 Socket, straight, .500" pigtails (.018 dia) 15 Socket, straight, 1.000" pigtails (.018 dia) 16 Socket, straight, crimped wire	TYPE CONTACTS/TERMINATIONS: 21 Pin, straight, solder cup 24 Pin, straight, .500" pigtails (.018 dia) 25 Pin, straight, 1.000" pigtails (.018 dia) 26 Pin, straight, crimped wire
PLATING OPTIONS: 1 50 µ" Au contacts (crimp wire) 3 50 µ" Au contacts; 10 µ" Au terminations (pigtail) 5 50 µ" Au contacts; Sn/Pb alloy terminations (pigtail) ☒ 7 50 µ" Au contacts; SAC305 terminations (pigtail)	PLATING OPTIONS: 1 50 µ" Au contacts (crimp wire) 3 50 µ" Au contacts; 10 µ" Au terminations (solder cup, pigtail) 5 50 µ" Au contacts; Sn/Pb alloy terminations (pigtail) X 7 50 u" Au contacts; SAC305 terminations (pigtail)
HARDWARE	
STYLE OF HARDWARE: 00 None	STYLE OF HARDWARE: 00 None
POLARIZATION / WIRING: 00 None XX For wiring codes, see page MA-3 & MA-4	POLARIZATION / WIRING 00 None XX For wiring codes, see page MA-3 & MA-4

☒ = Option not RoHS compliant

PANEL MOUNTING DIMENSIONS

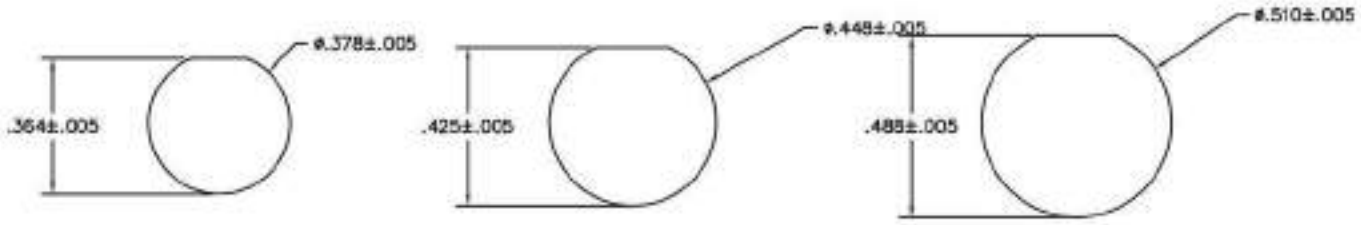

7 POSITION
FRONT PANEL MOUNT

7 POSITION
REAR PANEL MOUNT

19 POSITION
FRONT AND REAR PANEL MOUNT

AirBorn

Specifications - Rear Panel Mount Connectors

Materials and Finishes *

Contacts:	Pins: BeCu alloy strip per ASTM B194 Sockets: Brass per ASTM B121 / B121M or ASTM B453
Contact Finish:	Gold plate per ASTM B488
Shells:	Aluminum Alloy 6061-T6 per SAE AMS-QQ-A-250/11 or 6061-T6511 per SAE AMS-QQ-A-200/8
Aluminum Shell Finishes:	Electroless Nickel per SAE AMS2404, Class 3, 500 µ" min Electrodeposited Cadmium per SAE AMS-QQ-P-416, Type II, Class 3 Black Anodized per MIL-A-8625, Type III, Class 2
Molded Insulators:	Glass filled polyphenylene sulfide per MIL-M-24519
Embedment:	Frey Engineering Co. insulating compound CF3003-80 and L-II-49 or equivalent
Jackscrews, Jackposts and Nuts:	Corrosion resistant steel per ASTM A320 or ASTM A484 / A484M and ASTM A582 / A582M Passivated per SAE AMS2700
Clips:	Corrosion resistant steel per ASME 18.24 (For reference only: ASME 18.24 CRS per ASTM A693) Passivated per ASME 18.24 (For reference only: ASME 18.24 passivated per SAE AMS2700)
Gaskets:	Interfacial: Flucrosilicone per SAE AMS-R-25988 Flange: Flucrosilicone per SAE AMS-R-25988 Flange EMI: Conductive Elastomer per MIL-DTL-83528, Type D
Tolerances:	Unless otherwise specified: Fractions = ±1/64" Decimals = ±.010" Angles = ±5° Wire lengths: insulated/stranded = +1.0"/-0.0" uninsulated/solid = +0.2"/-0.0"

Note: AirBorn can manufacture special configurations for your exact specifications.

* = Reference the above listed specifications or an equivalent industry standard when applicable

AirBorn

Performance - Rear Panel Mount Connectors

Contact Rating:	3-amperes maximum
Solderability:	Terminals (except crimp) tested in accordance with MIL-STD-202, Method 208
Wire Size:	Stranded #26 AWG or solid #25 AWG standard (consult factory for other sizes and types)
Test Voltage:	600 V, RMS, 60 Hz
Operating Temperature:	-55° C to +125° C
Insulation Resistance:	5,000 megohms minimum @ 500 VDC
Durability:	500 connector mating cycles
Vibration:	Tested in accordance with MIL-STD-1344, Method 2005, Condition IV, according to MIL-83513
Shock:	Tested in accordance with MIL-STD-1344, Method 2004, Condition E, according to MIL-83513
Salt Spray:	Mated connectors tested in accordance with MIL-STD-1344, Method 1001, Test Condition B
Humidity:	Mated connectors tested in accordance with MIL-STD-1344, Method 1002, Type II (except steps 7a and 7b)
Thermal Shock:	Tested to the temperature extremes of MIL-STD-1344, Method 1003, Test Condition A (except step 3, temperature shall be 125° C)
Contact Resistance:	0.065 volt maximum drop @ 2.5 amps (.026 ohms)
Contact Engaging Force:	6.0 ounce maximum, with .0221 diameter test sleeve
Contact Separating Force:	0.5 ounce minimum, with .0230 diameter test sleeve
Crimp Strength:	5 pound minimum tensile strength
Sealing:	When mated, AirBorn rear panel mount connectors provide an environmental seal to water, moisture and certain chemicals as well as a dust and dirt barrier.

AirBorn

Cable to Cable (Rear Panel Mount)

.050"

9 thru 100 Contacts

Rugged Metal **MM**

Rugged Plastic **MN**

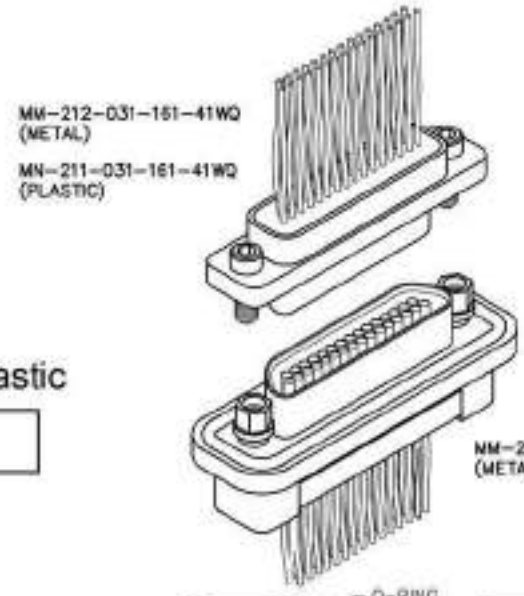

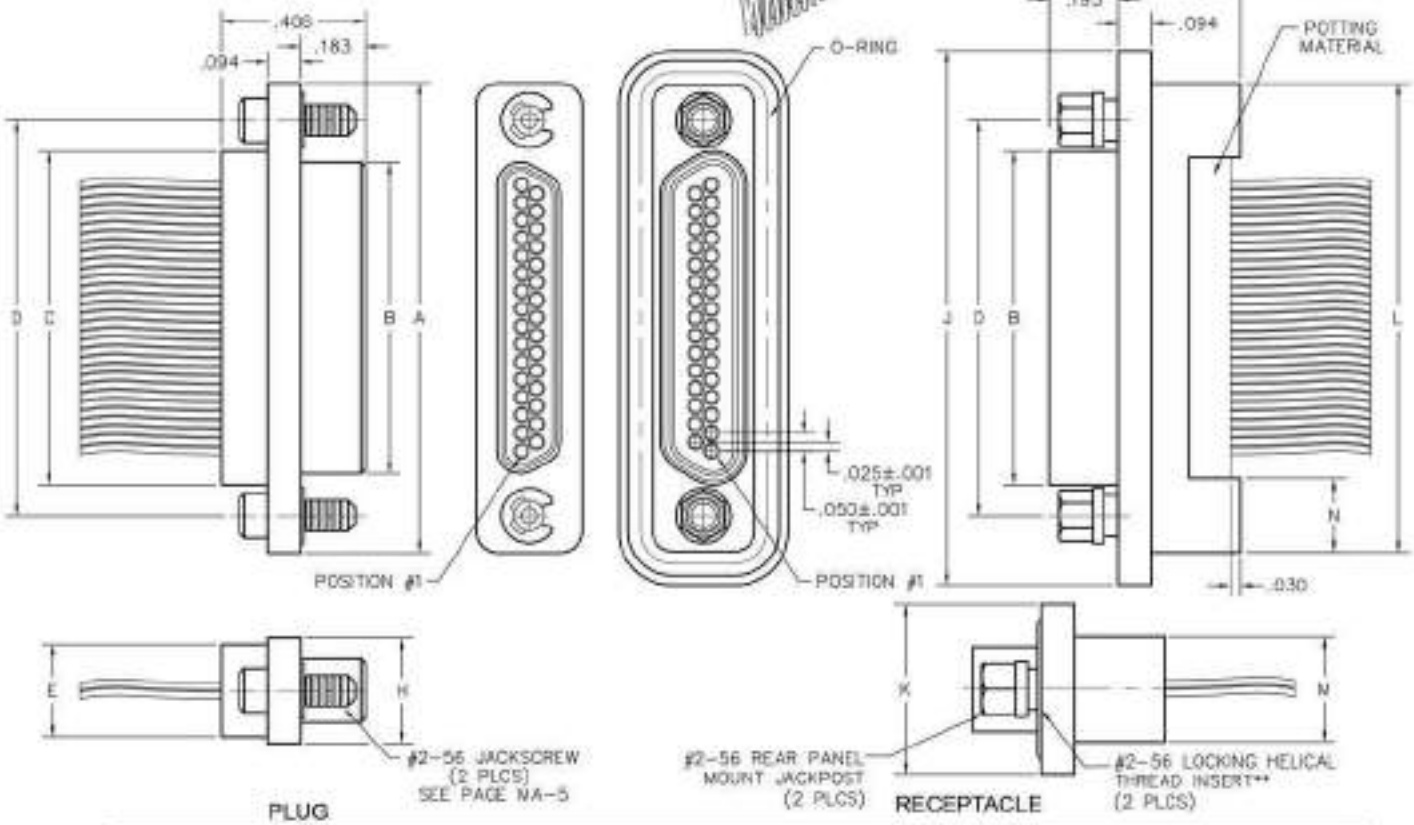

DIMENSIONS															
SIZE	CONTACT ROWS	A	B PLUG MAX	B RCPT MAX	C	D	E POTTING WELL MAX	H	HARDWARE	J	K	L	M	N
9	2	.775	.334	.400	.390	.565	.270	.298	#2-56 UNC THD	.957	.480	.773	.298	.210
15		.925	.484	.550	.540	.715				1.107		.923		
21		1.075	.634	.700	.690	.865				1.257		1.073		
25		1.175	.734	.800	.790	.965				1.357		1.173		
31		1.325	.884	.950	.940	1.115				1.507		1.323		
37		1.475	1.034	1.100	1.090	1.265				1.657		1.473		
51	3	1.425	.984	1.050	1.040	1.215	.310	.341		1.657	.523	1.477	.440	.239
69*		1.725	1.284	1.350	1.340	1.515				1.957		1.777		
100	4	2.160	1.384	1.508	1.432	1.800	.360	.384	#4-40 UNC THD	2.383	.600	2.219	.515	.301

* = 69 POSITON CONNECTORS ARE AVAILABLE IN METAL ONLY.

** = SHELL ACCEPTS .200 MAX #2-56 SCREW LENGTH (.295 MAX #4-40 SCREW LENGTH)

AirBorn

PLUG: MM–212–031–161–41WQ
RECEPTACLE: MM–2C2–031–261–26WA –EMI
PLUG: MN–211–031–161–41WQ
RECEPTACLE: MM–2C2–031–261–26WA –EMI

XX–XXX–XXX–XXX–XXXX–XXX

PLUG	RECEPTACLE
SERIES	
MM .050" Rugged Metal I/O Connector MN .050" Rugged Plastic I/O Connector (MM & MN mate with MK, ML, MM, MN receptacles)	MM .050" Rugged Metal I/O Connector (MM mates with MK, ML, MM, MN plugs)
BODY	
2 2-Row (Sizes 9 thru 37) 3 3-Row (Size 51 or 69) 4 4-Row (Size 100)	2 2-Row (Sizes 9 thru 37) 3 3-Row (Size 51 or 69) 4 4-Row (Size 100)
BODY STYLE: 1 Plug, straight, with ears	BODY STYLE: C Receptacle, straight, rear panel mount, with fluorosilicone o-ring and interfacial seal
BODY MATERIAL: 1 Polyphenylene Sulfide (MN only) 2 Polyphenylene Sulfide with electroless nickel shell 3 Polyphenylene Sulfide with electrodeposited cadmium shell ☒ 4 Polyphenylene Sulfide with hard anodized black shell	BODY MATERIAL: 2 Polyphenylene Sulfide with electroless nickel shell 3 Polyphenylene Sulfide with electrodeposited cadmium shell ☒ 4 Polyphenylene Sulfide with hard anodized black shell
SIZE	
XXX 009, 015, 021, 025, 031, 037, 051, 069, 100	XXX 009, 015, 021, 025, 031, 037, 051, 069, 100
CONTACTS	
TYPE CONTACTS/TERMINATIONS: 11 Pin, straight, 26 awg solder cup 1A Pin, straight, 24 awg solder cup 14 Pin, straight, .500" pigtails (.018 dia) 15 Pin, straight, 1.000" pigtails (.018 dia) 16 Pin, straight, crimped wire	TYPE CONTACTS/TERMINATIONS: 21 Socket, straight, 26 awg solder cup 2A Socket, straight, 24 awg solder cup 24 Socket, straight, .500" pigtails (.018 dia) 25 Socket, straight, 1.000" pigtails (.018 dia) 26 Socket, straight, crimped wire
PLATING OPTIONS: 1 50 µ" Au contacts (crimp wire) 3 50 µ" Au contacts; 10 µ" Au terminations (solder cup, pigtail) 5 50 µ" Au contacts; Sn/Pb alloy terminations (pigtail) ☒ 7 50 µ" Au contacts; SAC305 terminations (pigtail)	PLATING OPTIONS: 1 50 µ" Au contacts (crimp wire) 3 50 µ" Au contacts; 10 µ" Au terminations (solder cup, pigtail) 5 50 µ" Au contacts; Sn/Pb alloy terminations (pigtail) ☒ 7 50 µ" Au contacts; SAC305 terminations (pigtail)
HARDWARE	
STYLE OF HARDWARE: 00 None 41 Two turning jackscrews, allen head, retaining ring (81*) 42 Two long turning jackscrews, allen head, retaining ring (82*) 43 Two turning jackscrews, slot head, retaining ring (83*) 44 Two long turning jackscrews, slot head, retaining ring (84*) 45 Two turning jackscrews, allen head, captivated** (85*)	STYLE OF HARDWARE: 00 None 24 Two fixed jacknuts, rear panel mount, .040" panel thickness (64*) 26 Two fixed jacknuts, rear panel mount, .060" panel thickness (66*) 28 Two fixed jacknuts, rear panel mount, .070" panel thickness (68*) 29 Two fixed jacknuts, rear panel mount, .080" panel thickness (69*)
POLARIZATION / WIRING: 00 None XX For wiring codes, see page MA-3 & MA-4	POLARIZATION / WIRING 00 None XX For wiring codes, see page MA-3 & MA-4
OPTIONS	
	EMI EMI o-ring (in lieu of fluorosilicone o-ring)

* = Use number in parenthesis when ordering size 100.
** = Captive hardware is factory installed and non-removable.
☒ = Option not RoHS compliant

AirBorn

Cable to Cable (Rear Panel Mount)

.050"

9 thru 100 Contacts

Rugged Metal **MM**

Rugged Plastic **MN**

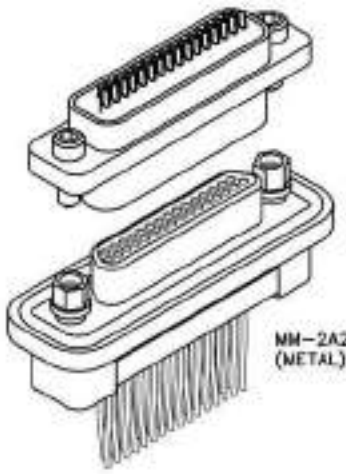

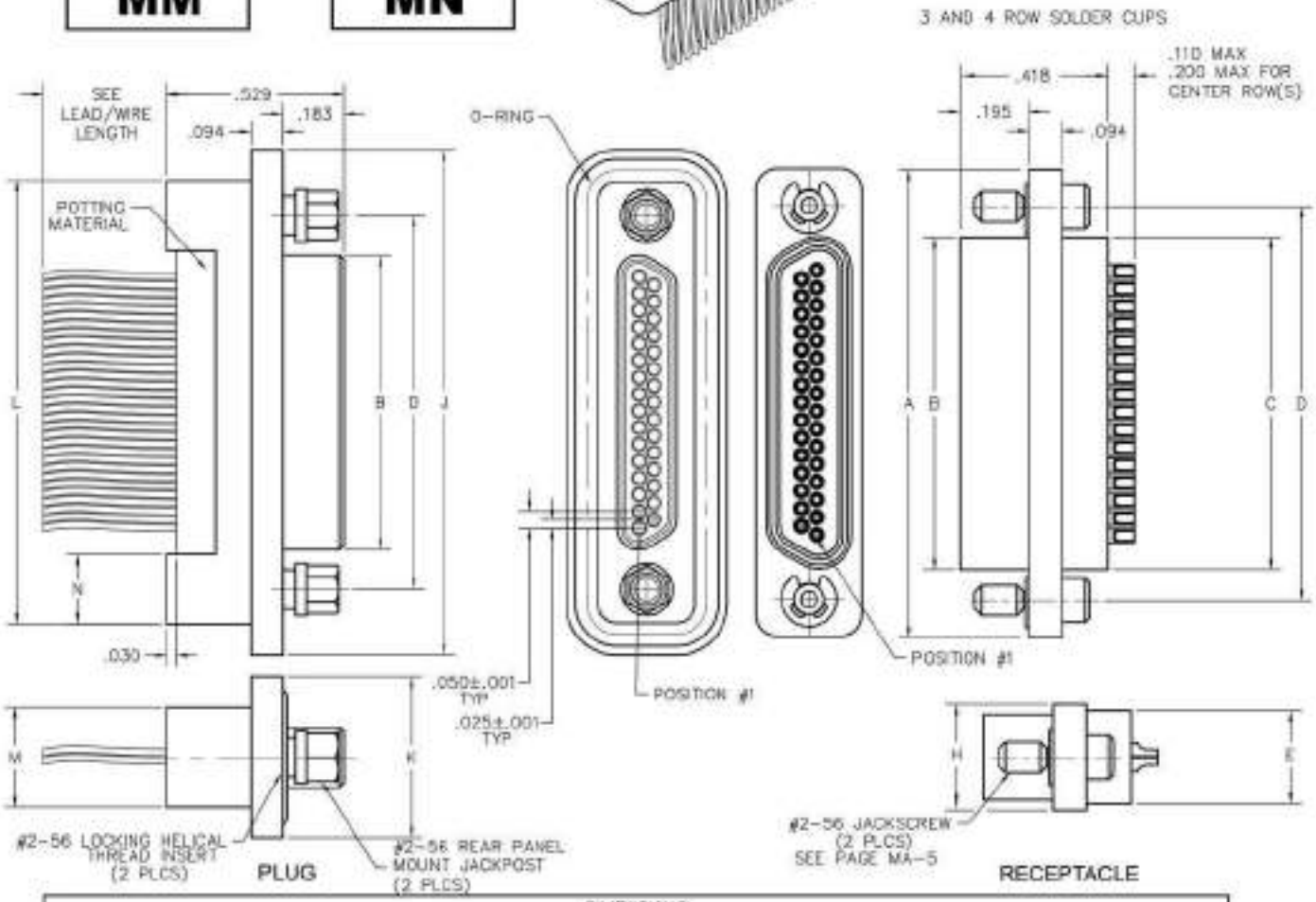

DIMENSIONS														
SIZE	CONTACT ROWS	A	B PLUG MAX	B RCPT MAX	C	D	E POTTING WELL MAX	H	HARDWARE	J	K	L	M	N
9	2	.775	.334	.400	.390	.565	.270	.298	#2-56 UNC THD (.092 DIA THRU)	.957	.480	.773	.298	.210
15		.925	.484	.550	.540	.715				1.107		.923		
21		1.075	.634	.700	.690	.865				1.257		1.073		
25		1.175	.734	.800	.790	.955				1.357		1.173		
31		1.325	.884	.950	.940	1.115				1.507		1.323		
37		1.475	1.034	1.100	1.090	1.265				1.657		1.473		
51	3	1.425	.984	1.050	1.040	1.215	.310	.341		1.657	.523	1.477	.440	.239
69*		1.725	1.284	1.350	1.340	1.515				1.957		1.777		
100	4	2.160	1.384	1.508	1.432	1.800	.360	.384	#4-40 UNC THD (.147 DIA THRU)	2.383	.600	2.219	.515	.301

* = 69 POSITON CONNECTORS ARE AVAILABLE IN METAL ONLY.

AirBorn

PLUG: MM–2A2–031–161–25WA–EMI
RECEPTACLE: MM–222–031–2G3–4500
PLUG: MN–2A2–031–161–25WA–EMI
RECEPTACLE: MN–221–031–2G3–4500

XX–XXX–XXX–XXX–XXXX–XXX

PLUG	RECEPTACLE
SERIES	
MM .050" Rugged Metal I/O Connector (MM mates with MK, ML, NM, MN receptacles)	MM .050" Rugged Metal I/O Connector MN .050" Rugged Plastic I/O Connector (MN & MN mate with MK, ML, MM, MN plugs)
BODY	
2 2-Row (Sizes 9 thru 37) 3 3-Row (Size 51 & 69) 4 4-Row (Size 100)	2 2-Row (Sizes 9 thru 37) 3 3-Row (Size 51 & 69) 4 4-Row (Size 100)
BODY STYLE: A Plug, straight, rear panel mount, with fluorosilicone o-ring	BODY STYLE: 2 Receptacle, straight, with ears
BODY MATERIAL: 2 Polyphenylene Sulfide with electroless nickel shell 3 Polyphenylene Sulfide with electrodeposited cadmium shell ☒ 4 Polyphenylene Sulfide with hard anodized black shell A Pure Electro-Deposited Aluminum K Zinc Nickel Plating T Nickel Polymer Plating	BODY MATERIAL: 1 Polyphenylene Sulfide (MN only) 2 Polyphenylene Sulfide with electroless nicel shell 3 Polyphenylene Sulfide with electrodeposited cadmium shell ☒ 4 Polyphenylene Sulfide with hard anodized black shell A Pure Electro-Deposited Aluminum K Zinc Nickel Plating T Nickel Polymer Plating
SIZE	
XXX 009, 015, 021, 025, 031, 037, 051, 069, 100	XXX 009, 015, 021, 025, 031, 037, 051, 069, 100
CONTACTS	
TYPE CONTACTS/TERMINATIONS: 11 Pin, straight, 26 awg solder cup 1A Pin, straight, 24 awg solder cup 1D Pin, straight, .109" Lead Length (.018 dia) see note 1 1E Pin, straight, .125" Lead Length (.018 dia) see note 1 1F Pin, straight, .140" Lead Length (.018 dia) see note 1 12 Pin, straight, .150" Lead Length (.018 dia) see note 1 1G Pin, straight, .156" Lead Length (.018 dia) see note 1 1H Pin, straight, .172" Lead Length (.018 dia) see note 1 1J Pin, straight, .187" Lead Length (.018 dia) see note 1 13 Pin, straight, .250" Lead Length (.018 dia) see note 1 1K Pin, straight, .375" Lead Length (.018 dia) see note 1 14 Pin, straight, .500" Lead Length (.018 dia) see note 1 15 Pin, straight, 1.000" Lead Length (.018 dia) see note 1 16 Pin, straight, crimped wire	TYPE CONTACTS/TERMINATIONS: 21 Socket, straight, 26 awg solder cup 2A Socket, straight, 24 awg solder cup 2D Socket, straight, .109" Lead Length (.018 dia) 2E Socket, straight, .125" Lead Length (.018 dia) 2F Socket, straight, .140" Lead Length (.018 dia) 22 Socket, straight, .150" Lead Length (.018 dia) 2G Socket, straight, .156" Lead Length (.018 dia) 2H Socket, straight, .172" Lead Length (.018 dia) 2J Socket, straight, .187" Lead Length (.018 dia) 23 Socket, straight, .250" Lead Length (.018 dia) 2K Socket, straight, .375" Lead Length (.018 dia) 2L Socket, straight, .500" Lead Length (.018 dia) 2M Socket, straight, 1.000" Lead Length (.018 dia) 24 Socket, straight, .500" Lead Length (.018 dia) see note 1 2S Socket, straight, 1.000" Lead Length (.018 dia) see note 1 26 Socket, straight, crimped wire
PLATING OPTIONS: 1 50 µ" Au contacts (crimp wire) 3 50 µ" Au contacts; 10 µ" Au Terminations (solder cup, pigtail) 5 50 µ" Au contacts; Sn/Pb alloy terminations (pigtail) ☒ 7 50 µ" Au contacts; SAC305 terminations (pigtail)	PLATING OPTIONS: 1 50 µ" Au contacts (crimp wire) 3 50 µ" Au contacts; 10 µ" Au Terminations (solder cup, pigtail) 5 50 µ" Au contacts; Sn/Pb alloy terminations (pigtail) ☒ 7 50 µ" Au contacts; SAC305 terminations (pigtail)
HARDWARE	
STYLE OF HARDWARE: 00 None 24 Two fixed jacknuts, rear panel mount, .040" panel thickness (64*) 26 Two fixed jacknuts, rear panel mount, .060" panel thickness (66*) 28 Two fixed jacknuts, rear panel mount, .070" panel thickness (68*) 29 Two fixed jacknuts, rear panel mount, .080" panel thickness (69*)	STYLE OF HARDWARE: 00 None 41 Two turning jackscrews, allen head, retaining ring (81*) 42 Two long turning jackscrews, allen head, retaining ring (82*) 43 Two turning jackscrews, slot head, retaining ring (83*) 44 Two long turning jackscrews, slot head, retaining ring (84*) 45 Two turning jackscrews, allen head, captivated** (85*)
POLARIZATION / WIRING 00 None XX For wiring codes, see page MA-3 & MA-4	POLARIZATION / WIRING 00 None XX For wiring codes, see page MA-3 & MA-4
OPTIONS	
EMI EMI o-ring (in lieu of fluorosilicone o-ring)	900 Interfacial sealing gasket

* = Use number in parenthesis when ordering size 100.
** = Captive hardware is factory installed and non-removable.
☒ = Option not RoHS compliant

NOTE 1 = The leads on these contacts are soft copper suitable for forming.

AirBorn

Cable to Board (Rear Panel Mount)

.050"

9 thru 100 Contacts

Rugged Board Mount

MK

Rugged Cable

MM, MN

MM-212-031-161-41WQ (METAL)

MN-211-031-161-41WQ (PLASTIC)

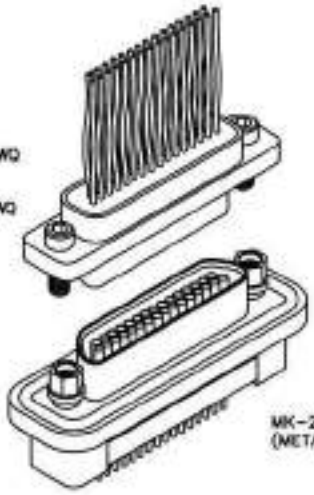

MK-2C2-031-235-2600 (METAL)

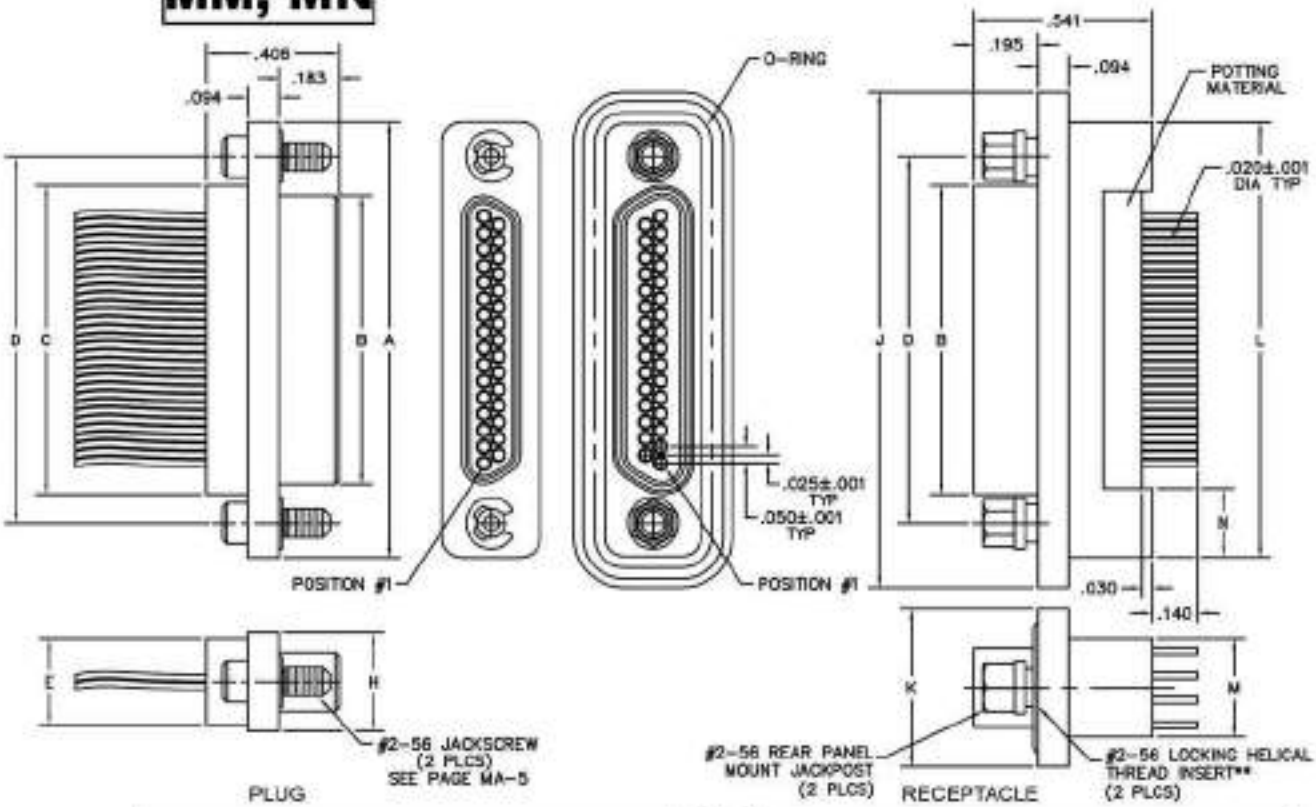

DIMENSIONS														
SIZE	CONTACT ROWS	A	B PLUG MAX	B RCPT MAX	C	D	E POTTING WELL MAX	H	HARDWARE	J	K	L	M	N
9	2	.775	.334	.400	.390	.565	.270	.298	#2-56 UNC THD	.957	.480	.773	.298	.210
15		.925	.484	.550	.540	.715				1.107		.923		
21		1.075	.634	.700	.690	.865				1.257		1.073		
25		1.175	.734	.800	.790	.965				1.357		1.173		
31		1.325	.884	.950	.940	1.115				1.507		1.323		
37		1.475	1.034	1.100	1.090	1.265				1.657		1.473		
51	3	1.425	.984	1.050	1.040	1.215	.310	.341		1.657	.523	1.477	.440	.239
68*		1.725	1.284	1.350	1.340	1.515				1.957		1.777		
100	4	2.160	1.384	1.508	1.432	1.800	.360	.384	#4-40 UNC THD	2.383	.600	2.219	.515	.301

* = 68 POSITON CONNECTORS ARE AVAILABLE IN METAL ONLY.

** = SHELL ACCEPTS .200 MAX #2-56 SCREW LENGTH (.295 MAX #4-40 SCREW LENGTH).

AirBorn

PLUG: MM–212–031–161–41WQ
RECEPTACLE: MK–2C2–031–235–2600–EMI
PLUG: MN–211–031–161–41WQ
RECEPTACLE: MK–2C2–031–235–2600–EMI
XX–XXX–XXX–XXX–XXXX–XXX

PLUG	RECEPTACLE
SERIES	
MM .050" Rugged Metal I/O Connector MN .050" Rugged Plastic I/O Connector (MM & MN mate with MK, ML, MM, MN receptacles)	MK .050" Rugged Metal PC Board Mount Connector (MK mates with MK, ML, MM, MN plugs)
BODY	
2 2-Row (Sizes 9 thru 37) 3 3-Row (Size 51 or 69) 4 4-Row (Size 100)	2 2-Row (Sizes 9 thru 37) 3 3-Row (Size 51 or 69) 4 4-Row (Size 100)
BODY STYLE: 1 Plug, straight, with ears	BODY STYLE: C Receptacle, straight, standard footprint, rear panel mount with fluorosilicone o-ring and interfacial seal
BODY MATERIAL: 1 Polyphenylene Sulfide (MN only) 2 Polyphenylene Sulfide with electroless nickel shell 3 Polyphenylene Sulfide with electrodeposited cadmium shell ☒ 4 Polyphenylene Sulfide with hard anodized black shell A Pure Electro-Deposited Aluminum K Zinc Nickel Plating T Nickel Polymer Plating	BODY MATERIAL: 2 Polyphenylene Sulfide with electroless nickel shell 3 Polyphenylene Sulfide with electrodeposited cadmium shell ☒ 4 Polyphenylene Sulfide with hard anodized black shell A Pure Electro-Deposited Aluminum K Zinc Nickel Plating T Nickel Polymer Plating
SIZE	
XXX 009, 015, 021, 025, 031, 037, 051, 069, 100	XXX 009, 015, 021, 025, 031, 037, 051, 069, 100
CONTACTS	
TYPE CONTACTS/TERMINATIONS: 11 Pin, straight, solder cup 14 Pin, straight, .500" pigtails (.018 dia) 15 Pin, straight, 1.000" pigtails (.018 dia) 16 Pin, straight, crimped wire	TYPE CONTACTS/TERMINATIONS: 22 Socket, straight, PCB leads, .109" 23 Socket, straight, PCB leads, .140" 24 Socket, straight, PCB leads, .172"
PLATING OPTIONS: 1 50 µ" Au contacts (crimp wire) 3 50 µ" Au contacts; 10 µ" Au terminations (solder cup, pigtail) 5 50 µ" Au contacts; Sn/Pb alloy terminations (pigtail) ☒ 7 50 µ" Au contacts; SAC305 terminations (pigtail)	PLATING OPTIONS: 3 50 µ" Au contacts; 10 µ" Au terminations 5 50 µ" Au contacts; Sn/Pb alloy terminations ☒ 7 50 µ" Au contacts; SAC305 terminations
HARDWARE	
STYLE OF HARDWARE: 00 None 41 Two turning jackscrews, allen head, retaining ring (81*) 42 Two long turning jackscrews, allen head, retaining ring (82*) 43 Two turning jackscrews, slot head, retaining ring (83*) 44 Two long turning jackscrews, slot head, retaining ring (84*) 45 Two turning jackscrews, allen head, captivated** (85*)	STYLE OF HARDWARE: 00 None 24 Two fixed jacknuts, rear panel mount, .040" panel thickness (64*) 26 Two fixed jacknuts, rear panel mount, .060" panel thickness (66*) 28 Two fixed jacknuts, rear panel mount, .070" panel thickness (68*) 29 Two fixed jacknuts, rear panel mount, .080" panel thickness (69*)
POLARIZATION / WIRING: 00 None XX For wiring codes, see page MA-3 & MA-4	POLARIZATION / WIRING 00 None
OPTIONS	
	EMI EMI o-ring (in lieu of fluorosilicone o-ring)

* = Use number in parenthesis when ordering size 100.
** = Captive hardware is factory installed and non-removable.

☒ = Option not RoHS compliant

AirBorn

Cable to Board (Rear Panel Mount)

.050"

9 thru 100 Contacts

Rugged Board Mount

MK

Rugged Cable

MM, MN

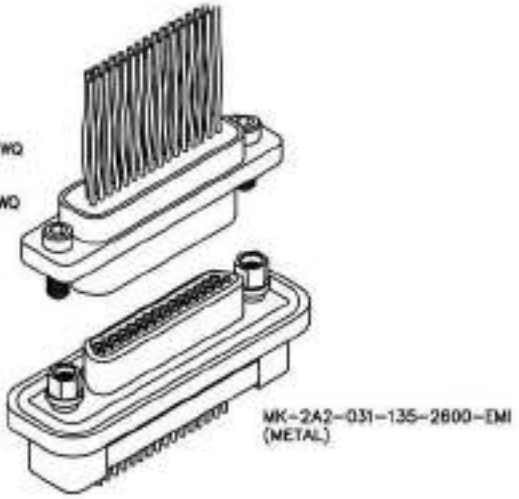

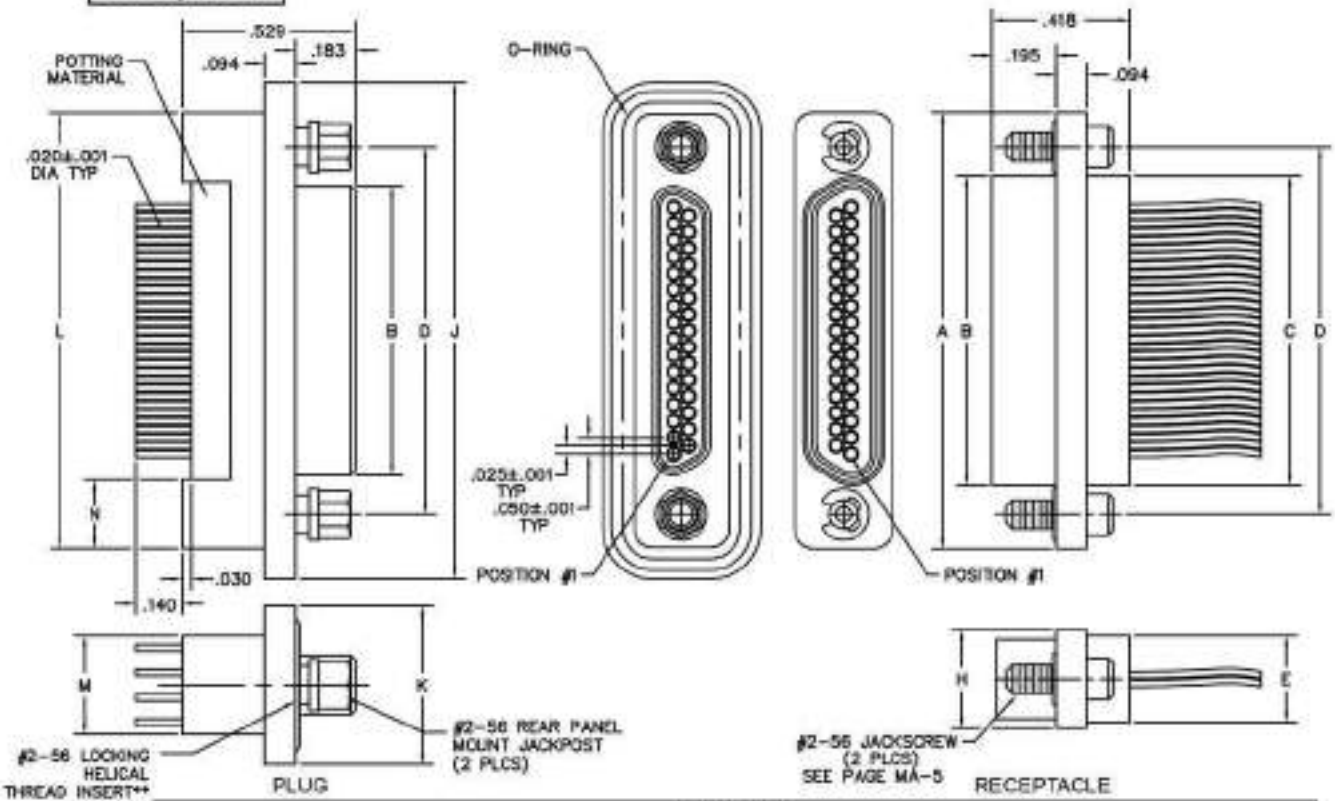

DIMENSIONS														
SIZE	CONTACT ROWS	A	B PLUG MAX	B RCPT MAX	C	D	E POTTING WELL MAX	H	HARDWARE	J	K	L	M	N
9	2	.775	.334	.400	.390	.565	.270	.298	#2-56 UNC THD	.957	.480	.773	.298	.210
15		.925	.484	.550	.540	.715				1.107		.923		
21		1.075	.634	.700	.690	.865				1.257		1.073		
25		1.175	.734	.800	.790	.965				1.357		1.173		
31		1.325	.884	.950	.940	1.115				1.507		1.323		
37		1.475	1.034	1.100	1.090	1.265				1.657		1.473		
51	3	1.425	.984	1.050	1.040	1.215	.310	.341		1.657	.523	1.477	.440	.239
69*		1.725	1.284	1.350	1.340	1.515				1.957		1.777		
100	4	2.160	1.384	1.508	1.432	1.800	.380	.384	#4-40 UNC THD	2.383	.800	2.219	.515	.301

* = 69 POSITON CONNECTORS ARE AVAILABLE IN METAL ONLY.

** = SHELL ACCEPTS .250 MAX #2-56 SCREW LENGTH (.285 MAX #4-40 SCREW LENGTH).

AirBorn

PLUG: MK-2A2-031-135-2600-EMI
RECEPTACLE: MM-222-031-261-41WQ
PLUG: MK-2A2-031-135-2600-EMI
RECEPTACLE: MN-221-031-261-41WQ

XX-XXX-XXX-XXX-XXXX-XXX

PLUG	RECEPTACLE
SERIES	
MK .050" Rugged Metal PC Board Mount Connector (MK mates with MK, ML, MM, MN receptacles)	MM .050" Rugged Metal I/O Connector MN .050" Rugged Plastic I/O Connector (MM & MN mate with MK, ML, MM, MN plugs)
BODY	
2 2-Row (Sizes 9 thru 37) 3 3-Row (Size 51 or 69) 4 4-Row (Size 100)	2 2-Row (Sizes 9 thru 37) 3 3-Row (Size 51 or 69) 4 4-Row (Size 100)
BODY STYLE: A Plug, straight, standard footprint, rear panel mount with fluorosilicone o-ring	BODY STYLE: 2 Receptacle, straight, with ears
BODY MATERIAL: 2 Polyphenylene Sulfide with electroless nickel shell 3 Polyphenylene Sulfide with electrodeposited cadmium shell ☒ 4 Polyphenylene Sulfide with hard anodized black shell	BODY MATERIAL: 1 Polyphenylene Sulfide (MN only) 2 Polyphenylene Sulfide with electroless nickel shell 3 Polyphenylene Sulfide with electrodeposited cadmium shell ☒ 4 Polyphenylene Sulfide with hard anodized black shell
SIZE	
XXX 009, 015, 021, 025, 031, 037, 051, 069, 100	XXX 009, 015, 021, 025, 031, 037, 051, 069, 100
CONTACTS	
TYPE CONTACTS/TERMINATIONS: 12 Pin, straight, PCB leads, .109" 13 Pin, straight, PCB leads, .140" 14 Pin, straight, PCB leads, .172"	TYPE CONTACTS/TERMINATIONS: 21 Socket, straight, solder cup 24 Socket, straight, .500" pigtails (.018 dia) 25 Socket, straight, 1.000" pigtails (.018 dia) 26 Socket, straight, crimped wire
PLATING OPTIONS: 3 50 µ" Au contacts; 10 µ" Au terminations 5 50 µ" Au contacts; Sn/Pb alloy terminations ☒ 7 50 µ" Au contacts; SAC305 terminations	PLATING OPTIONS: 1 50 µ" Au contacts (crimp wire) 3 50 µ" Au contacts; 10 µ" Au terminations (solder cup, pigtail) 5 50 µ" Au contacts; Sn/Pb alloy terminations (pigtail) ☒ 7 50 µ" Au contacts; SAC305 terminations (pigtail)
HARDWARE	
STYLE OF HARDWARE: 00 None 24 Two fixed jacknuts, rear panel mount, .040" panel thickness (64*) 26 Two fixed jacknuts, rear panel mount, .060" panel thickness (66*) 28 Two fixed jacknuts, rear panel mount, .070" panel thickness (68*) 29 Two fixed jacknuts, rear panel mount, .080" panel thickness (69*)	STYLE OF HARDWARE: 00 None 41 Two turning jackscrews, allen head, retaining ring (81*) 42 Two long turning jackscrews, allen head, retaining ring (82*) 43 Two turning jackscrews, slot head, retaining ring (83*) 44 Two long turning jackscrews, slot head, retaining ring (84*) 45 Two turning jackscrews, allen head, captivated** (85*)
POLARIZATION / WIRING: 00 None	POLARIZATION / WIRING 00 None XX For wiring codes, see page MA-3 & MA-4
OPTIONS	
EMI EMI o-ring (in lieu of fluorosilicone o-ring)	900 Interfacial sealing gasket

* = Use number in parenthesis when ordering size 100.
** = Captive hardware is factory installed and non-removable.

☒ = Option not RoHS compliant

AirBorn

Recommended PC Board Layout

Straight, Standard Footprint

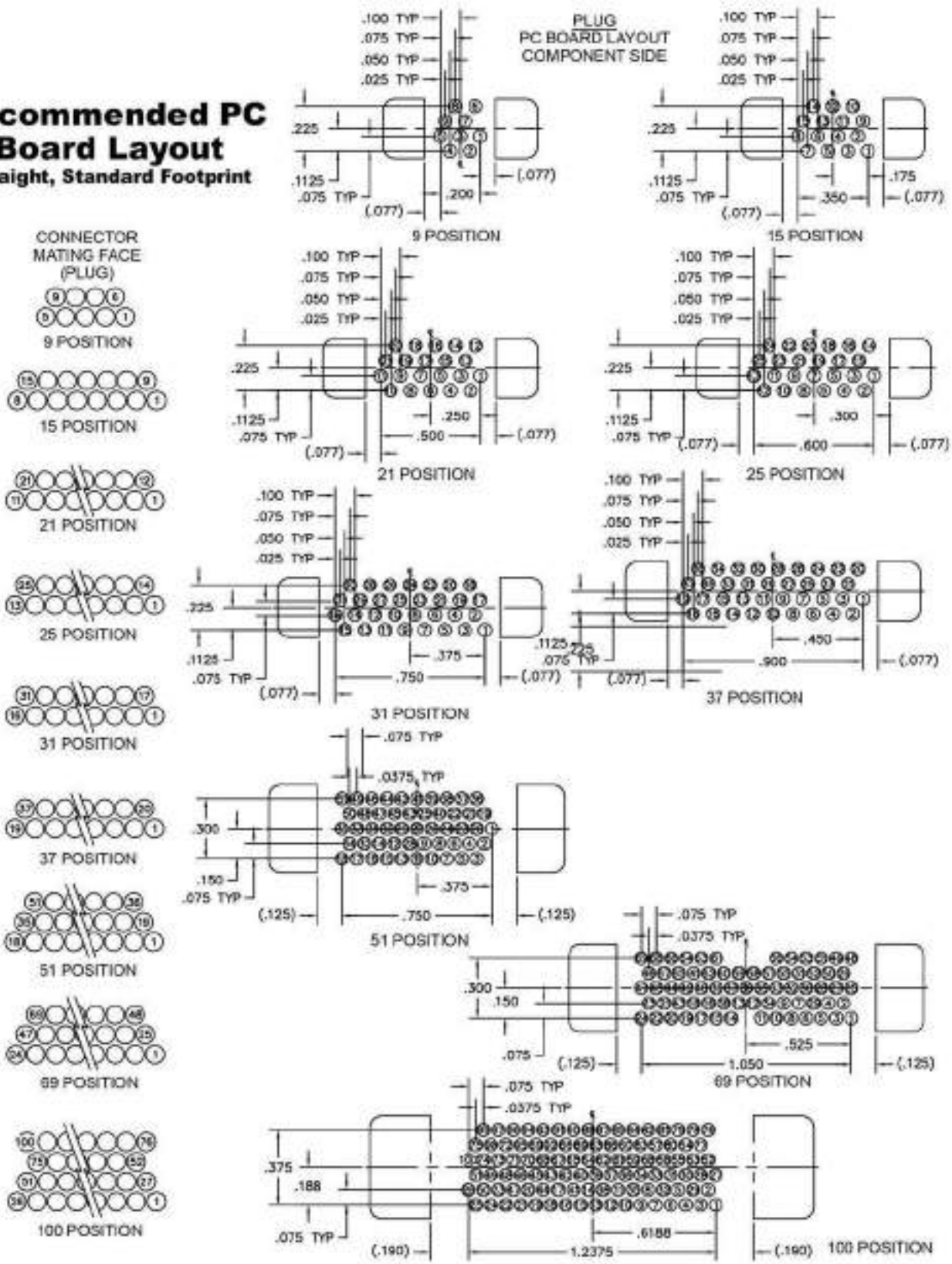

AirBorn

Recommended PC Board Layout

Straight, Standard Footprint

RECEPTACLE
PC BOARD LAYOUT
COMPONENT SIDE

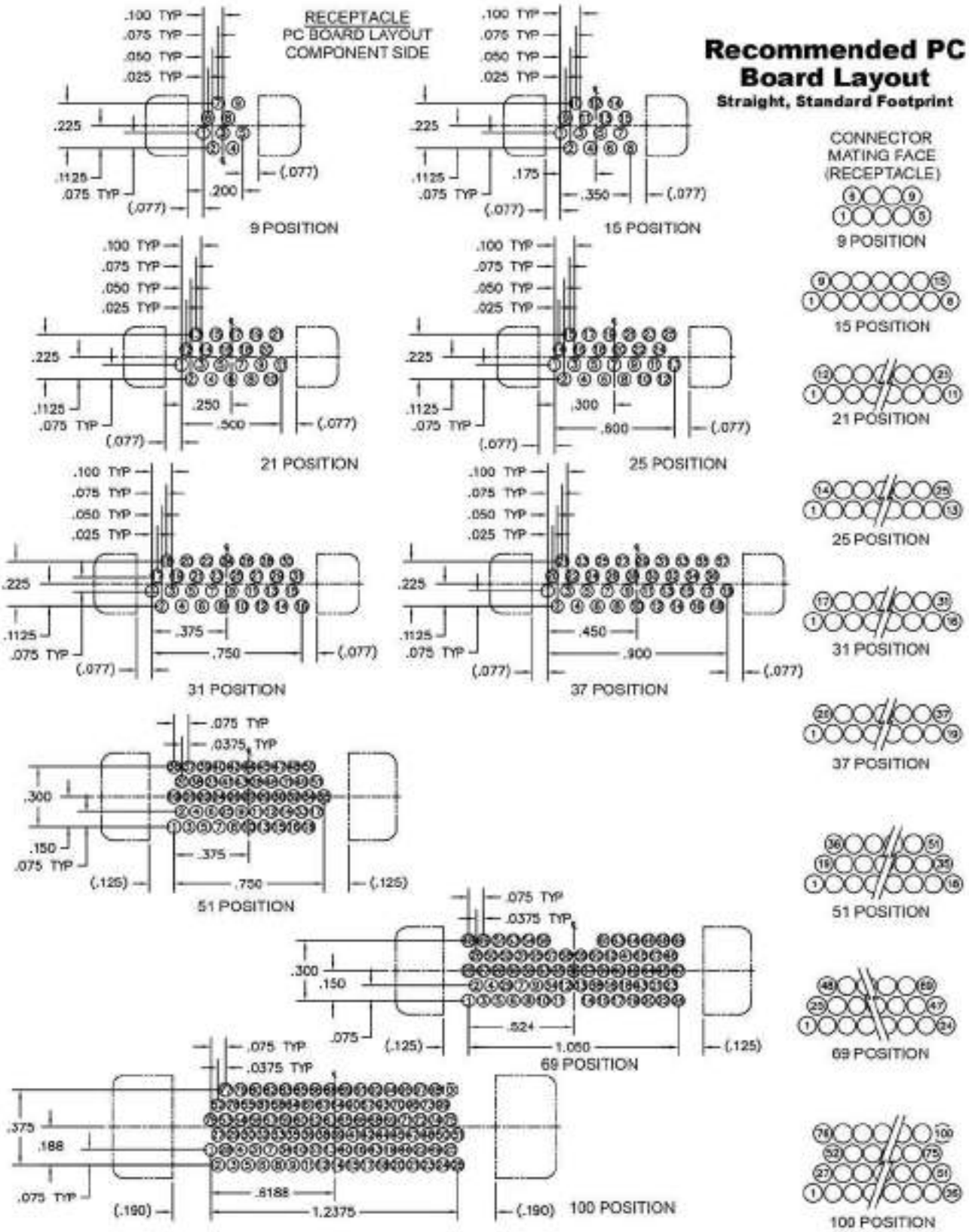

AirBorn

Rear Panel Mount, Right Angle Boardmount

.050"

9 thru 100 Contacts

MK

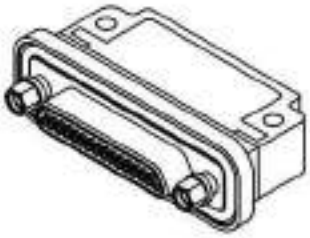

MK-202-031-335-260S
(PLUG)

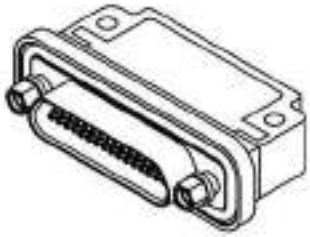

MK-2E2-031-445-260S
(RECEPTACLE)

MATING MATRIX	
CONNECTOR	MATES WITH
MK-2D...	MK, ML, MM, MN receptacles
MK-2E...	MK, ML, MM, MN plugs

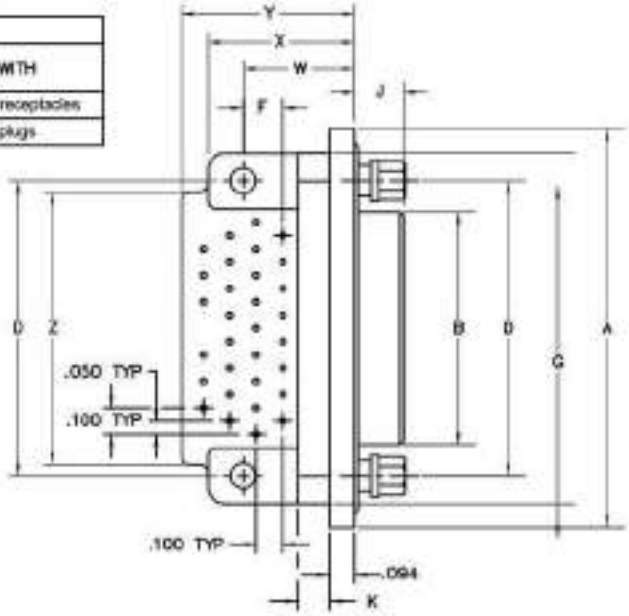

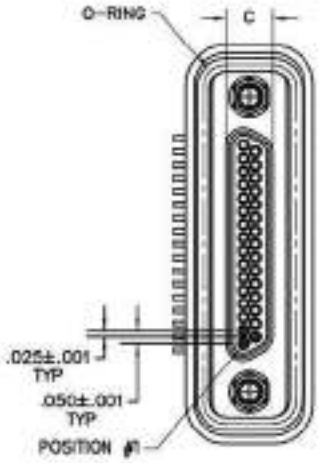

(PLUG SHOWN)

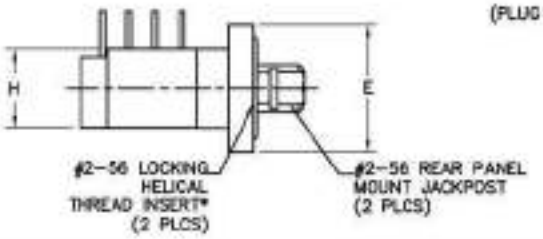

DIMENSIONS																					
SIZE	CONTACT ROWS	A	B		C		D	E	F	G	H	J		K	W	X MAX	Y MAX	Z	HARDWARE	MOUNTING HOLE
			PLUG MAX	RCPT MAX	PLUG MAX	RCPT MAX						PLUG	RCPT							
9	2	.957	.334	.400	.185	.251	.565	.480	.020	.775	.298	.183	.195	.120	.421	.560	.560	.775	#2-56 UNC THD	.095 DIA OR #2-56 UNC THREADED INSERT
15		1.107	.484	.550			.715		.150	.925								.925		
21		1.257	.634	.700			.865			1.075							.560	1.075		
25		1.357	.734	.800			.965			1.175								1.175		
31		1.507	.884	.950			1.115			1.325							.660	1.030		
37		1.657	1.034	1.100			1.265			1.475								1.180		
51	3	1.657	.984	1.050	.228	.294	1.215	.523	.150	1.425	.341					.550	.770	1.220		
69		1.957	1.284	1.350			1.515			1.725							.870	1.450		
100	4	2.383	1.384	1.508	.271	.394	1.800	.600	.200	2.160	.381			.176	.577	.775	1.180	1.810	#4-40 UNC THD	.125 DIA OR #4-40 UNC THREADED INSERT

* = SHELL ACCEPTS .190 MAX #2-56 SCREW LENGTH (.220 MAX #4-40 SCREW LENGTH)

AirBorn

PLUG: MK 2D2-031-335-260S
RECEPTACLE: MK 2E2-031-445-260S

XX-XXX-XXX-XXX-XXXX-XXX

SERIES | BODY | SIZE | CONTACTS | HARDWARE | OPTIONS

PLUG

SERIES

MK .050" Rugged Metal PC Board Mount Connector

BODY

2 2-Row (Sizes 9 thru 37)
3 3-Row (Size 51 & 69)
4 4-Row (Size 100)

BODY STYLE:
D Plug, right angle, rear panel mount with fluorosilicone o-ring

BODY MATERIAL:
2 Electroless nickel shell w/ PPS insulator
3 Electrodeposited cadmium shell w/ PPS insulator ☒
4 Hard anodized black shell w/ PPS insulator

SIZE

XXX 009, 015, 021, 025, 031, 037, 051, 069, 100

CONTACTS

TYPE CONTACTS/TERMINATIONS:
32 Pin, right angle, PCB leads, .109"
33 Pin, right angle, PCB leads, .140"
34 Pin, right angle, PCB leads, .172"

PLATING OPTIONS:
3 50 µ" Au contacts
5 50 µ" Au contacts; Sn/Pb alloy terminations ☒
7 50,u" Au contacts; SAC305 terminations

HARDWARE

STYLE OF HARDWARE:
00 None
24 Two fixed jacknuts, rear panel mount, .040" panel thickness (64")
26 Two fixed jacknuts, rear panel mount, .060" panel thickness (66")
28 Two fixed jacknuts, rear panel mount, .070" panel thickness (68")
29 Two fixed jacknuts, rear panel mount, .080" panel thickness (69")

POLARIZATION:
0S Standard body polarization

OPTIONS

EMI EMI gasket (in lieu of fluorosilicone o-ring)
0B7 Threaded inserts in mounting holes
0FW Threaded inserts in mounting holes and EMI gasket (in lieu of fluorosilicone o-ring)

NOTES

See page MA-10 for rear panel mounting dimensions.
See page MA-7 for rear panel hardware dimensions.

RECEPTACLE

SERIES

MK .050" Rugged Metal PC Board Mount Connector

BODY

2 2-Row (Sizes 9 thru 37)
3 3-Row (Size 51 & 69)
4 4-Row (Size 100)

BODY STYLE:
E Receptacle, right angle, rear panel mount with fluorosilicone o-ring and interfacial seal

BODY MATERIAL:
2 Electroless nickel shell w/ PPS insulator
3 Electrodeposited cadmium shell w/ PPS insulator ☒
4 Hard anodized black shell w/ PPS insulator

SIZE

XXX 009, 015, 021, 025, 031, 037, 051, 069, 100

CONTACTS

TYPE CONTACTS/TERMINATIONS:
43 Socket, right angle, PCB leads, .109"
44 Socket, right angle, PCB leads, .140"
45 Socket, right angle, PCB leads, .172"

PLATING OPTIONS:
3 50 µ" Au contacts
5 50 µ" Au contacts; Sn/Pb alloy terminations ☒
7 50,u" Au contacts; SAC305 terminations

HARDWARE

STYLE OF HARDWARE:
00 None
24 Two fixed jacknuts, rear panel mount, .040" panel thickness (64")
26 Two fixed jacknuts, rear panel mount, .060" panel thickness (66")
28 Two fixed jacknuts, rear panel mount, .070" panel thickness (68")
29 Two fixed jacknuts, rear panel mount, .080" panel thickness (69")

POLARIZATION:
0S Standard body polarization

OPTIONS

EMI EMI gasket (in lieu of fluorosilicone o-ring)
0B7 Threaded inserts in mounting holes
0FW Threaded inserts in mounting holes and EMI gasket (in lieu of fluorosilicone o-ring)

NOTES

See page MA-10 for rear panel mounting dimensions.
See page MA-7 for rear panel hardware dimensions.

* = Use numbers in parenthesis when ordering size 100.
☒ = Option not RoHS compliant

AirBorn

Recommended PC Board Layout

Right Angle, Narrow Footprint
Rear Panel Mount
Standard Polarization

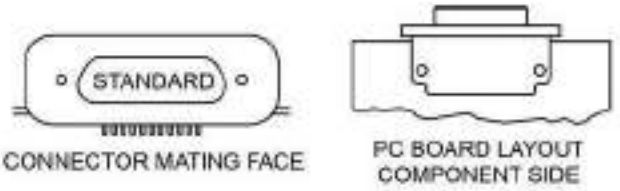

PLUG
PC BOARD LAYOUT
COMPONENT SIDE

RECEPTACLE
PC BOARD LAYOUT
COMPONENT SIDE

CONNECTOR MATING FACE* (RECEPTACLE)

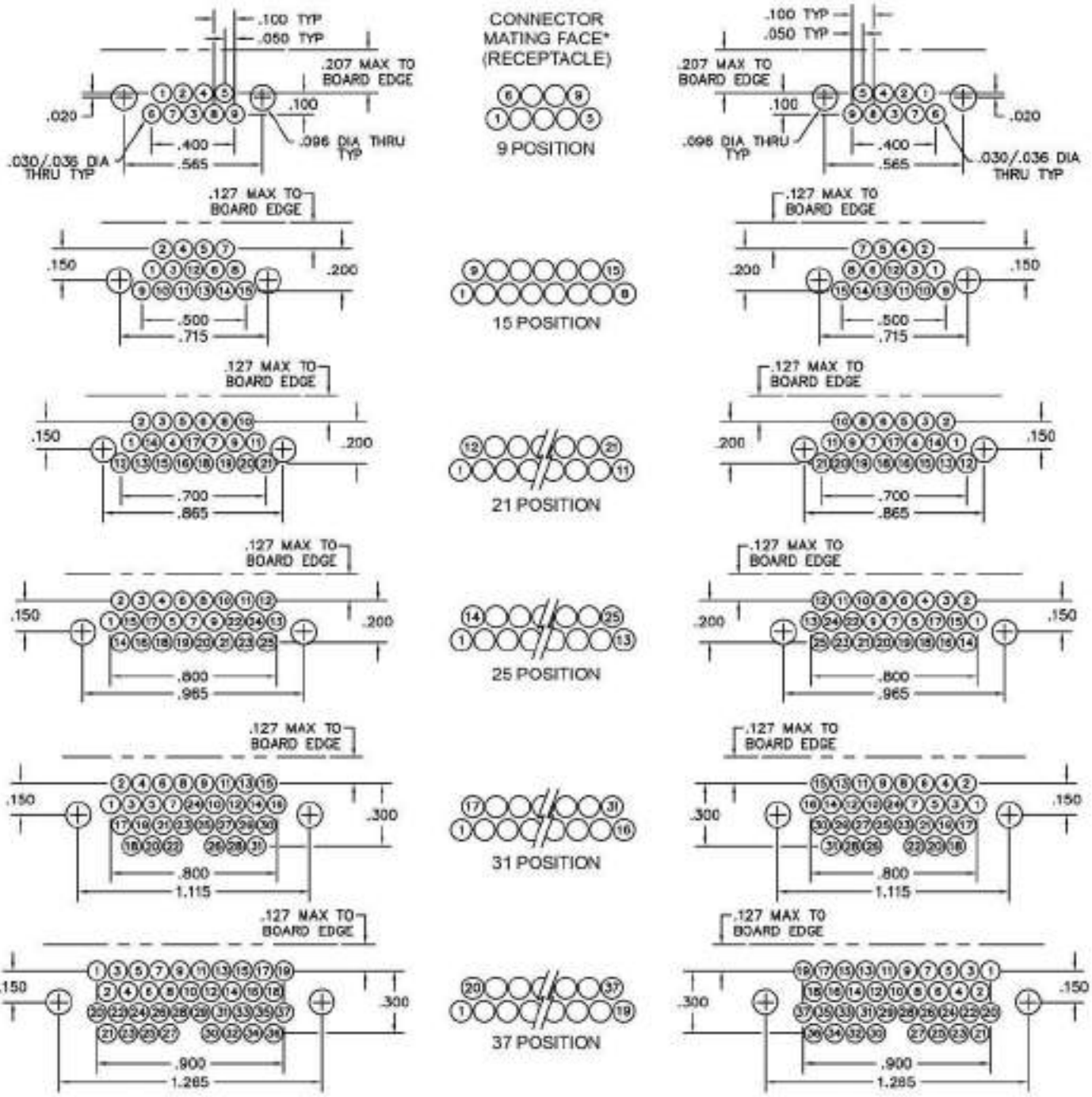

AirBorn

CONNECTOR MATING FACE

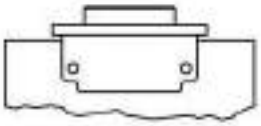

PC BOARD LAYOUT
COMPONENT SIDE

Recommended PC Board Layout

Right Angle, Narrow Footprint
Rear Panel Mount
Standard Polarization

PLUG
PC BOARD LAYOUT
COMPONENT SIDE

RECEPTACLE
PC BOARD LAYOUT
COMPONENT SIDE

CONNECTOR MATING FACE* (RECEPTACLE)

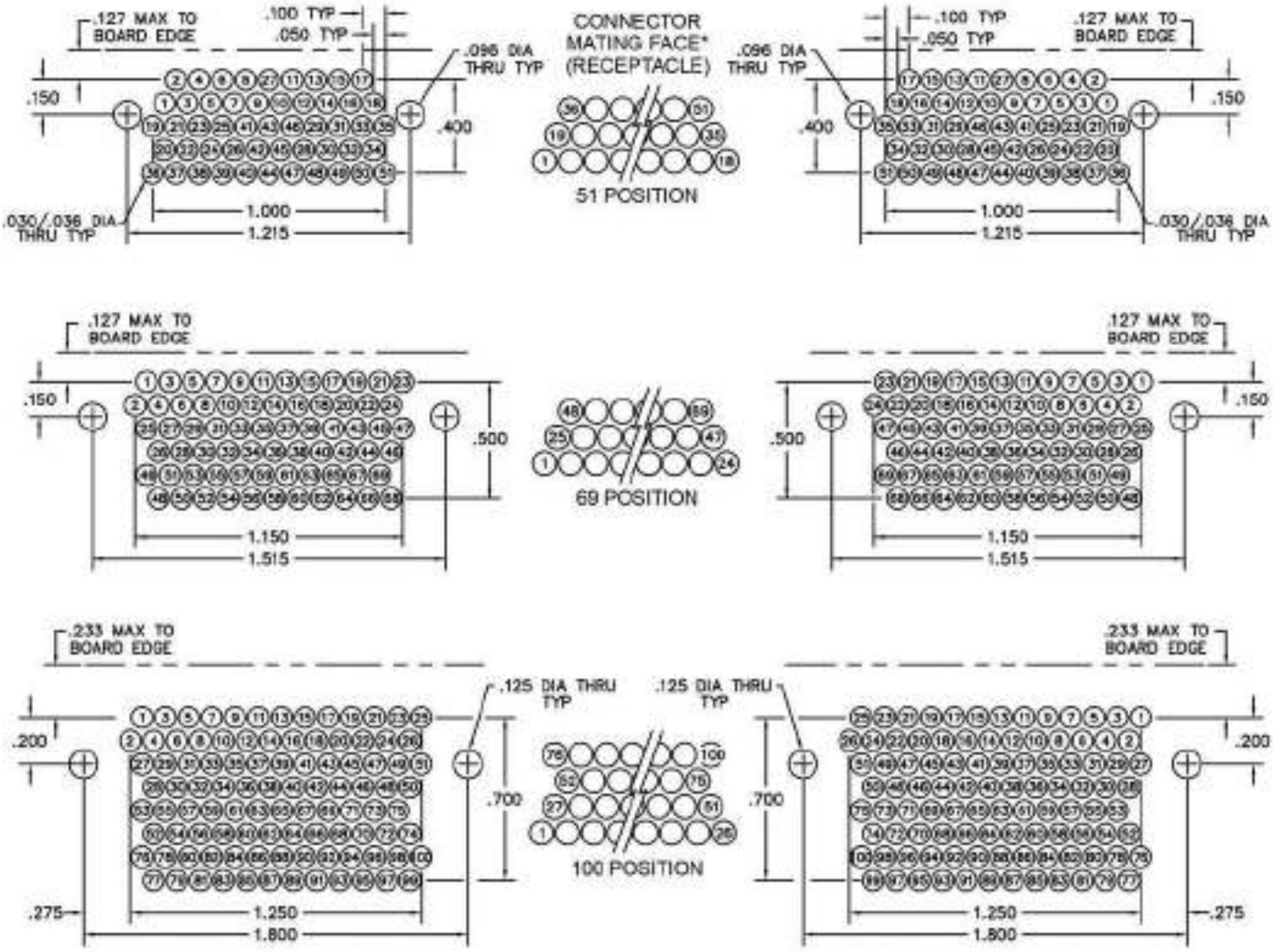

* For pin (plug) connectors, the contact numbers are reversed left to right.

AirBorn

Specifications - Sealed Connectors

Materials and Finishes *

Contacts:	Pins: BeCu alloy strip per ASTM B194 Sockets: Brass per ASTM B16 / B16M or ASTM B453 Uninsulated/solid wire tails: Brass per ASTM B16 / B16M or ASTM B453
Contact Finish:	Gold plate per ASTM B488
Shells:	Aluminum Alloy 6061-T6 per SAE AMS-QQ-A-250/11 or 6061-T6511 per SAE AMS-QQ-A-200/8
Aluminum Shell Finishes:	Electroless Nickel per SAE AMS2404, Class 3, 500 µ" min Electrodeposited Cadmium per SAE AMS-QQ-P-416, Type II, Class 3 Black Anodized per MIL-A-8625, Type III, Class 2
Molded Insulators:	Glass filled polyphenylene sulfide per MIL-M-24519
Embedment:	Frey Engineering Co. insulating compound CF3003-80 and L-II-49 or equivalent
Jackposts:	Corrosion resistant steel per ASTM A320 or ASTM A484 / A484M and ASTM A582 / A582M Passivated per SAE AMS2700
Gaskets:	Interfacial: Fluorosilicone per SAE AMS-R-25988 Flange: Butyl per SAE AMS3238** Internal: EPDM per ASTM D2000**
Tolerances:	Unless otherwise specified: Fractions = ±1/64" Decimals = ±.010" Angles = ±5° Wire lengths: insulated/stranded = +1.0"/-0.0" uninsulated/solid = +0.2"/-0.0"

Note: AirBorn can manufacture special configurations for your exact specifications.

* Reference the above listed specifications or an equivalent industry standard when applicable.

** Chemical compatibility of gasket materials must be considered for each application. Contact AirBorn for specific application questions.

AirBorn

Performance

Interface:	Per M83513
Contact Rating:	3-amperes maximum
Solderability:	Terminals (except crimp) tested in accordance with MIL-STD-202, Method 208
Wire Size:	Stranded #24, #26, #28 AWG or solid #25 AWG standard (consult factory for other sizes and types)
Test Voltage:	600 V, RMS, 60 Hz
Operating Temperature:	-55° C to +100° C
Insulation Resistance:	5,000 megohms minimum @ 500 VDC
Durability:	500 connector mating cycles
Vibration:	Tested in accordance with EIA-364-28, Condition IV, according to MIL-83513
Shock:	Tested in accordance with EIA-364-27, Condition E, according to MIL-83513
Salt Spray:	Mated connectors tested in accordance with EIA-364-26, Test Condition B, according to M83513
Humidity:	Mated connectors tested in accordance with EIA-364-31, Method IV (except steps 7a and 7b)
Thermal Shock:	Tested to the temperature extremes of EIA-364-32, Method A, Test Condition I (except step 3, temperature shall be 100° C)
Contact Resistance:	0.065 volt maximum drop @ 2.5 amps (.026 ohms), according to M83513
Contact Engaging Force:	6.0 ounce maximum, with .0221 diameter test sleeve
Contact Separating Force:	0.5 ounce minimum, with .0230 diameter test sleeve
Crimp Strength:	5 pound minimum tensile strength
Sealing:	15 PSI per EIA-364-02 at room temperature, 5 minutes with no visible air leaks, positive pressure from wire (back side) of connector. (Body Styles E & H)
	30 PSI per EIA-364-02 at room temperature, 5 minutes with no visible air leaks, positive pressure from wire (back side) of connector. (Body Styles K & L)

AirBorn

Rugged Metal I/O (Sealed Connector)

.050"

9 thru 100 Contacts

MM

MM-2E2-031-161-25WA
(PLUG)

MM-2H2-031-261-25WA
(RECEPTACLE)

MATING MATRIX	
CONNECTOR	MATES WITH
MM-2E...	MK, ML, MM, MN receptacles
MM-2H...	MK, ML, MM, MN plugs
MM-2K...	MK, ML, MM, MN receptacles
MM-2L...	MK, ML, MM, MN plugs

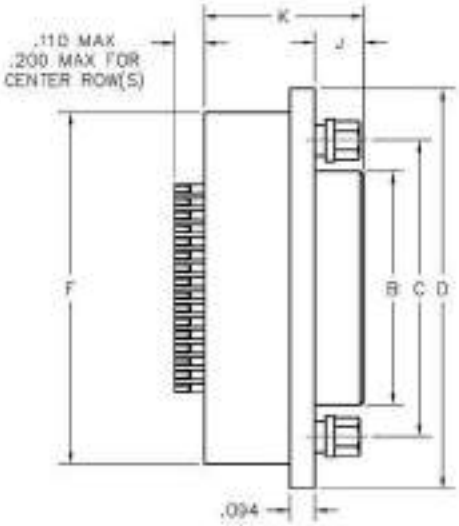

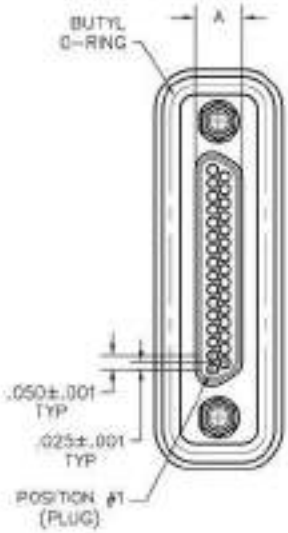

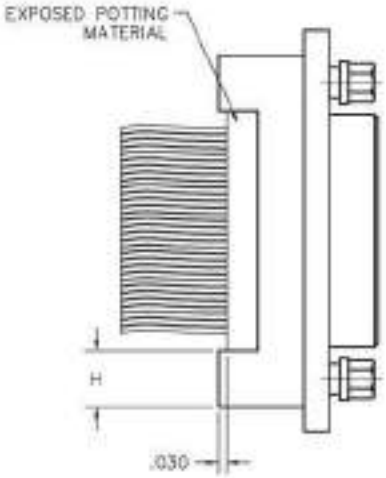

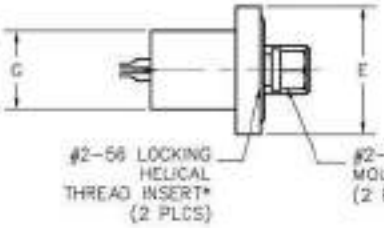

STRANDED WIRE TERMINATION
(PLUG SHOWN)

SOLDER CUP OR PIGTAIL TERMINATION
(PLUG WITH SOLDER CUP TERMINATION SHOWN)

DIMENSIONS																	
SIZE	CONTACT ROWS	A		B		C	HARDWARE	D	E	F	G	H	J		K	
		PLUG MAX	RCPT MAX	PLUG MAX	RCPT MAX								PLUG	RCPT	PLUG	RCPT
9	2	.185	.251	.334	.400	.565	#2-56 UNC THD	.957	.480	.773	.298	.210	.183	.195	.598	.610
15				.484	.550	.715		1.107		.923						
21				.634	.700	.865		1.257		1.073						
25				.734	.800	.965		1.357		1.173						
31				.884	.950	1.115		1.507		1.323						
37				1.034	1.100	1.265		1.657		1.473						
51	3	.228	.294	.984	1.050	1.215		1.657	.523	1.477	.440	.239				
69				1.284	1.350	1.515		1.957		1.777						
100	4	.271	.394	1.384	1.508	1.800	#4-40 UNC THD	2.383	.600	2.219	.515	.301				

** = SHELL ACCEPTS .200 MAX #2-56 SCREW LENGTH (.265 MAX #4-40 SCREW LENGTH).

AirBorn

PLUG: MM – 2E2 – 031 – 161 – 26WA
RECEPTACLE: MM – 2H2 – 031 – 261 – 26WA
XX – XXX – XXX – XXX – XXXX
SERIES | BODY | SIZE | CONTACTS | HARDWARE & WIRING

PLUG

SERIES
MM .050" Rugged Metal I/O Connector

BODY
2 2-Row (Sizes 9 thru 37)
3 3-Row (Sizes 51 thru 69)
4 4-Row (Size 100)

BODY STYLE:
E Plug, straight, rear panel mount. Sealed to 15 PSI pressure differential.
K Plug, straight, rear panel mount. Sealed to 30 PSI pressure differential.

All seal ratings are in the unmated condition

BODY MATERIAL:
2 Polyphenylene Sulfide with electroless nickel shell
3 Polyphenylene Sulfide with electrodeposited cadmium shell ☒
4 Polyphenylene Sulfide with hard anodized black shell

SIZE
XXX 009, 015, 021, 025, 031, 037, 051, 069, 100

CONTACTS
TYPE CONTACTS/TERMINATIONS:
11 Pin, straight, solder cup
14 Pin, straight, .500" pigtails (.018 dia)
16 Pin, straight, stranded wire

PLATING OPTIONS:
1 50 µ" Au contacts (stranded wire) ☒
3 50 µ" Au contacts; Au terminations (solder cup, pigtail)
5 50 u" Au contacts; Sn/Pb alloy terminations (pigtail) ☒
7 50 u" Au contacts; SAC305 terminations (pigtail)

HARDWARE & WIRING
STYLE OF HARDWARE:
00 None
24 Two fixed jacknuts, rear panel mount, .040" panel thickness (64")
26 Two fixed jacknuts, rear panel mount, .060" panel thickness (66")
28 Two fixed jacknuts, rear panel mount, .070" panel thickness (68")
29 Two fixed jacknuts, rear panel mount, .080" panel thickness (69")

WIRING:
00 None (solder cup and pigtail only)
XX For wiring codes, see page MA-3 & MA-4

NOTES
See page MA-10 for rear panel mounting dimensions.
See page MA-7 for hardware dimensions.
See Product Technical Bulletin #43 for soldering to solder cups.

RECEPTACLE

SERIES
MM .050" Rugged Metal I/O Connector

BODY
2 2-Row (Sizes 9 thru 37)
3 3-Row (Sizes 51 thru 69)
4 4-Row (Size 100)

BODY STYLE:
H Receptacle, straight, rear panel mount, with fluorosilicone interfacial seal. Sealed to 15 PSI pressure differential.
L Receptacle, straight, rear panel mount, with fluorosilicone interfacial seal. Sealed to 30 PSI pressure differential.

All seal ratings are in the unmated condition

BODY MATERIAL:
2 Polyphenylene Sulfide with electroless nickel shell
3 Polyphenylene Sulfide with electrodeposited cadmium shell ☒
4 Polyphenylene Sulfide with hard anodized black shell

SIZE
XXX 009, 015, 021, 025, 031, 037, 051, 069, 100

CONTACTS
TYPE CONTACTS/TERMINATIONS:
21 Socket, straight, solder cup
24 Socket, straight, .500" pigtails (.018 dia)
26 Socket, straight, crimped wire

PLATING OPTIONS:
1 50 µ" Au contacts (stranded wire) ☒
3 50 µ" Au contacts; Au terminations (solder cup, pigtail)
5 50 u" Au contacts; Sn/Pb alloy terminations (pigtail) ☒
7 50 u" Au contacts; SAC305 terminations (pigtail)

HARDWARE & WIRING
STYLE OF HARDWARE:
00 None
24 Two fixed jacknuts, rear panel mount, .040" panel thickness (64")
26 Two fixed jacknuts, rear panel mount, .060" panel thickness (66")
28 Two fixed jacknuts, rear panel mount, .070" panel thickness (68")
29 Two fixed jacknuts, rear panel mount, .080" panel thickness (69")

WIRING:
00 None (solder cup and pigtail only)
XX For wiring codes, see page MA-3 & MA-4

NOTES
See page MA-10 for rear panel mounting dimensions.
See page MA-7 for hardware dimensions.
See Product Technical Bulletin #43 for soldering to solder cups.

* = Use numbers or letters in parenthesis when ordering size 100.
☒ = Option not RoHS compliant

AirBorn

Cable to Cable (1 Row)

.050"

4 thru 25 Contacts

MM

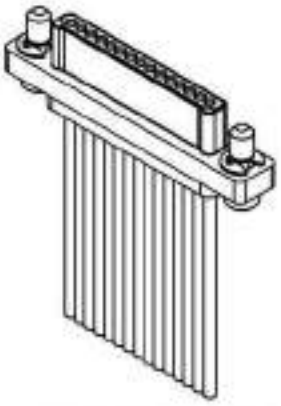

MM-112-015-161-41WQ
(PLUG)

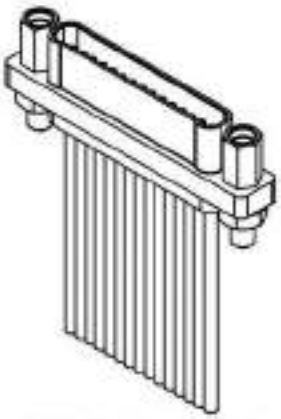

MM-122-015-261-22WQ
(RECEPTACLE)

MATING MATRIX	
CONNECTOR	MATES WITH
MM-11...	MM-12, MK-16, MK-18 receptacles
MM-12...	MM-11, MK-15, MK-17 plugs

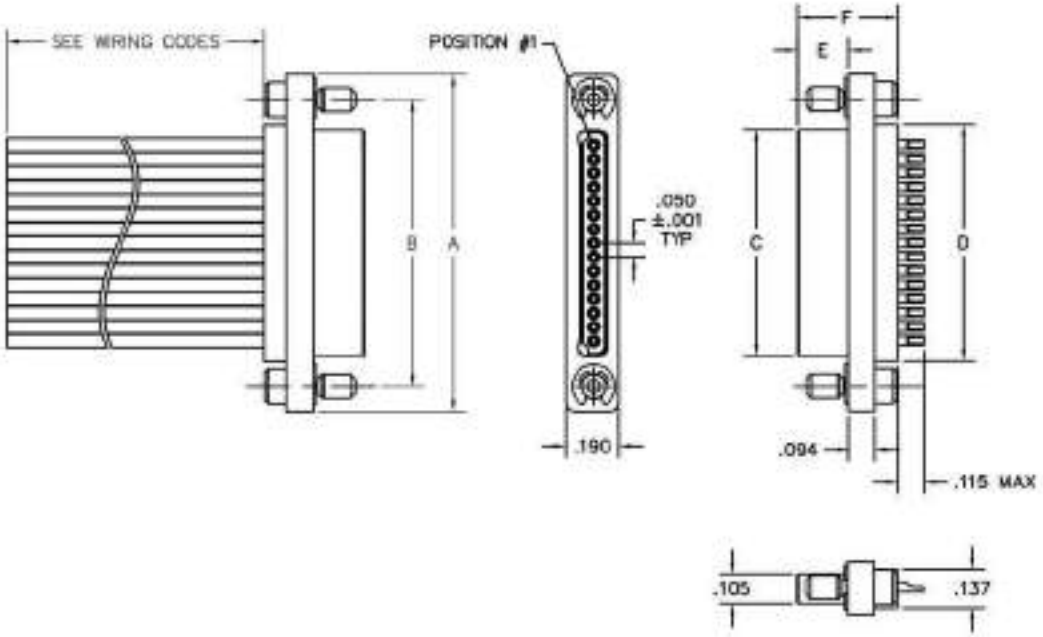

PLUG SHOWN

DIMENSIONS										
SIZE	A	B	C PLUG MAX	C RCPT MAX	D	E PLUG MAX	E RCPT MAX	F PLUG MAX	F RCPT MAX	HARDWARE
4	.655	.475	.260	.297	.297	.186	.198	.358	.370	#2-56 UNC THD (ø.092 THRU)
5	.705	.525	.310	.347	.347					
6	.755	.575	.360	.397	.397					
9	.905	.725	.510	.547	.547					
12	1.055	.875	.660	.697	.697					
15	1.205	1.025	.810	.847	.847					
21	1.505	1.325	1.110	1.147	1.147					
25	1.705	1.525	1.310	1.347	1.347					

AirBorn

PLUG: MM-112-006-113-2200
RECEPTACLE: MM-122-006-2A3-4100

XX-XXX-XXX-XXX-XXXX-XXX

SERIES | BODY | SIZE | CONTACTS | HARDWARE | OPTIONS

PLUG

SERIES

MM .050" Rugged Metal I/O Connector
(MM mates to MK & MM)

BODY

1 1-Row (Sizes 4 thru 25)

BODY STYLE:
1 Plug, straight

BODY MATERIAL:
2 Electroless nickel shell w/ PPS insert
3 Electrodeposited cadmium shell w/ PPS insert ☒
5 Stainless Steel shell w/ PPS insert
A Pure Electro-Deposited Aluminum
K Zinc Nickel Plating
T Nickel Polymer Plating

SIZE

XXX 004, 005, 006, 009, 012, 015, 021, 025

CONTACTS

TYPE CONTACTS/TERMINATIONS:
11 Pin, straight, 26 awg solder cup
1A Pin, straight, 24 awg solder cup
12 Pin, straight, 0.150" pigtails (.018 dia)
13 Pin, straight, 0.250" pigtails (.018 dia)
14 Pin, straight, 0.500" pigtails (.018 dia)
16 Pin, straight, crimped wire

PLATING OPTIONS:
1 50 u" Au contacts (Crimped Wire)
3 50 u" Au contacts; Au terminations (solder cup, pigtail)
5 50 u" Au contacts; Sn/Pb alloy terminations (pigtail) ☒
7 50 u" Au contacts; SAC305 terminations (pigtail)

HARDWARE

STYLE OF HARDWARE:
00 None
22 Two fixed jacknut assemblies
41 Two turning jackscrews, allen head, retaining ring
45 Two turning jackscrews, allen head, captivated**

WIRING

XX For wiring codes, see page MA-3 & MA-4

RECEPTACLE

SERIES

MM .050" Rugged Metal I/O Connector
(MM mates to MK & MM)

BODY

1 1-Row (Sizes 4 thru 25)

BODY STYLE:
2 Receptacle, straight

BODY MATERIAL:
2 Electroless nickel shell w/ PPS insert
3 Electrodeposited cadmium shell w/ PPS insert ☒
5 Stainless Steel shell w/ PPS insert
A Pure Electro-Deposited Aluminum
K Zinc Nickel Plating
T Nickel Polymer Plating

SIZE

XXX 004, 005, 006, 009, 012, 015, 021, 025

CONTACTS

TYPE CONTACTS/TERMINATIONS:
21 Skt, straight, 26 awg solder cup
2A Skt, straight, 24 awg solder cup
22 Skt, straight, 0.150" pigtails (.018 dia)
23 Skt, straight, 0.250" pigtails (.018 dia)
24 Skt, straight, 0.500" pigtails (.018 dia)
26 Skt, straight, crimped wire

PLATING OPTIONS:
1 50 u" Au contacts (Crimped Wire)
3 50 u" Au contacts; Au terminations (solder cup, pigtail)
5 50 u" Au contacts; Sn/Pb alloy terminations (pigtail) ☒
7 50 u" Au contacts; SAC305 terminations (pigtail)

HARDWARE

STYLE OF HARDWARE:
00 None
22 Two fixed jacknut assemblies
41 Two turning jackscrews, allen head, retaining ring
45 Two turning jackscrews, allen head, captivated**

WIRING

XX For wiring codes, see page MA-3 & MA-4

OPTIONS

900 Interfacial Seal

** = Captive hardware is factory installed and non-removable.
☒ = Option not RoHS compliant

AirBorn

Right Angle Boardmount (1 Row)

.050"

4 thru 25 Contacts

MK

MATING MATRIX	
CONNECTOR	MATES WITH
MK-15...	MM-12, MK-18 receptacles
MK-16...	MM-11, MK-17 plugs

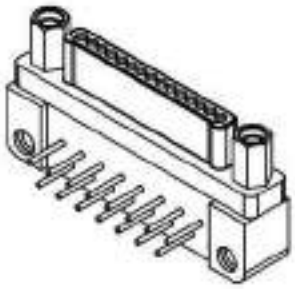

MK-152-015-325-220S
(PLUG)

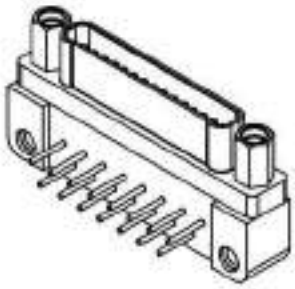

MK-162-015-435-220S
(RECEPTACLE)

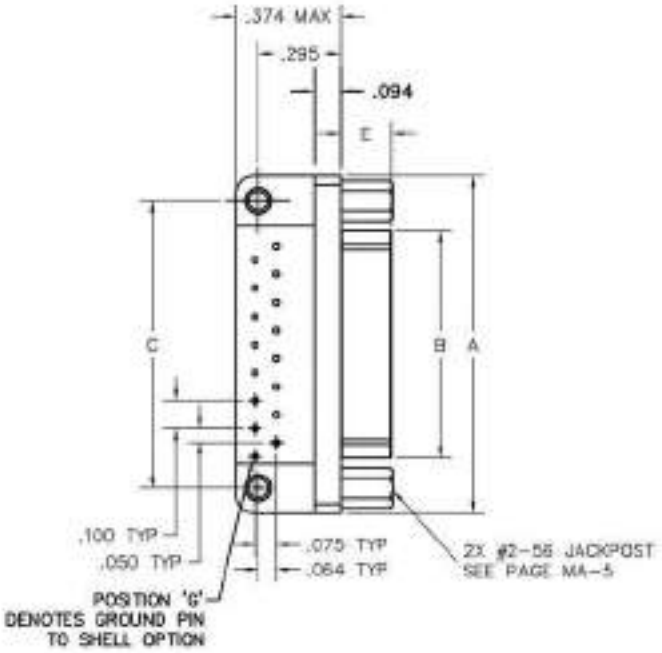

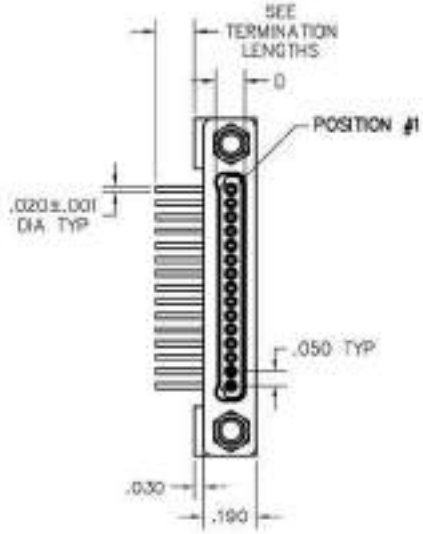

PLUG SHOWN

DIMENSIONS									
SIZE	A	B		C	D		E		MOUNTING HOLE
		PLUG MAX	RCPT MAX		PLUG MAX	RCPT MAX	PLUG MAX	RCPT MAX	
4	.655	.260	.297	.475	.110	.142	.186	.198	#2-56 CLEARANCE THRU OR #2-56 UNC THREADED INSERT
5	.705	.310	.347	.525					
6	.755	.360	.397	.575					
9	.905	.510	.547	.725					
12	1.055	.660	.697	.875					
15	1.205	.810	.847	1.025					
21	1.505	1.110	1.147	1.325					
25	1.705	1.310	1.347	1.525					

PLUG: MK–152–006–325–220S
RECEPTACLE: MK–162–006–425–220S

XX–XXX–XXX–XXX–XXXX–XXX

SERIES | BODY | SIZE | CONTACTS | HARDWARE | OPTIONS

PLUG

SERIES

MK .050" Rugged Metal Right Angle PTH Connector
(MK mates to MK & MM)

BODY

1 1-Row (Sizes 4 thru 25)

BODY STYLE:
5 Plug, right angle, standard footprint, with mounting holes

BODY MATERIAL:
2 Electroless nickel shell w/ PPS insert
3 Electrodeposited cadmium shell w/ PPS insert ☒
5 Stainless Steel shell w/ PPS insert
A Pure Electro-Deposited Aluminum
K Zinc Nickel Plating
T Nickel Polymer Plating

SIZE

XXX 004, 005, 006, 009, 012, 015, 021, 025

CONTACTS

TYPE CONTACTS/TERMINATIONS:
32 Pin, right angle, pcb leads, .109"
33 Pin, right angle, pcb leads, .140"
34 Pin, right angle, pcb leads, .172"
A2 Pin, right angle, pcb leads, .109" w/ ground pin option
A3 Pin, right angle, pcb leads, .140" w/ ground pin option
A4 Pin, right angle, pcb leads, .172" w/ ground pin option

PLATING OPTIONS:
3 50 u" Au contacts; Au terminations
5 50 u" Au contacts; Sn/Pb alloy terminations ☒
7 50 u" Au contacts; SAC305 terminations

HARDWARE

STYLE OF HARDWARE:
00 None
22 Two fixed jacknut assemblies

POLARIZATION:
0S Standard body polarization

RECEPTACLE

SERIES

MK .050" Rugged Metal Right Angle PTH Connector
(MM mates to MK & MM)

BODY

1 1-Row (Sizes 4 thru 25)

BODY STYLE:
6 Receptacle, right angle, standard footprint, with mounting holes

BODY MATERIAL:
2 Electroless nickel shell w/ PPS insert
3 Electrodeposited cadmium shell w/ PPS insert ☒
5 Stainless Steel shell w/ PPS insert
A Pure Electro-Deposited Aluminum
K Zinc Nickel Plating
T Nickel Polymer Plating

SIZE

XXX 004, 005, 006, 009, 012, 015, 021, 025

CONTACTS

TYPE CONTACTS/TERMINATIONS:
43 Socket, right angle, pcb leads, .109"
44 Socket, right angle, pcb leads, .140"
45 Socket, right angle, pcb leads, .172"
B3 Socket, right angle, pcb leads, .109" w/ ground pin option
B4 Socket, right angle, pcb leads, .140" w/ ground pin option
B5 Socket, right angle, pcb leads, .172" w/ ground pin option

PLATING OPTIONS:
3 50 u" Au contacts; Au terminations
5 50 u" Au contacts; Sn/Pb alloy terminations ☒
7 50 u" Au contacts; SAC305 terminations

HARDWARE

STYLE OF HARDWARE:
00 None
22 Two fixed jacknut assemblies

POLARIZATION:
0S Standard body polarization

OPTIONS

0B7 Threaded inserts, standard body polarization

900 Interfacial Seal

0B7 Threaded inserts and interfacial sealing gasket, standard body polarization

☒ = Option not RoHS compliant

AirBorn

Recommended PC Board Layout

RIGHT ANGLE
Standard Polarization
Pos 4 thru 9

CONNECTOR MATING FACE

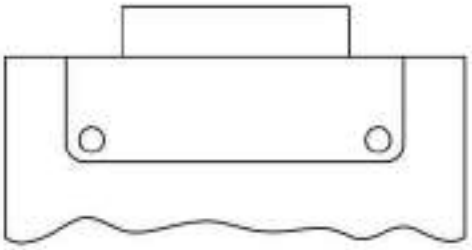

PC BOARD LAYOUT
COMPONENT SIDE

PLUG
PC BOARD LAYOUT
COMPONENT SIDE

CONNECTOR MATING FACE* (RECEPTACLE)

RECEPTACLE
PC BOARD LAYOUT
COMPONENT SIDE

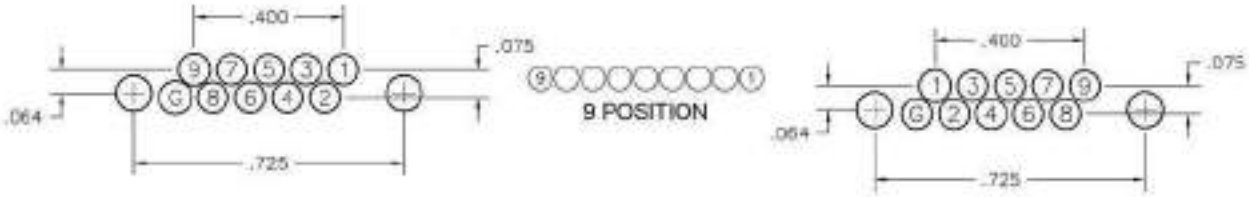

Recommended PC Board Layout

RIGHT ANGLE
Standard Polarization
Pos 12 thru 25

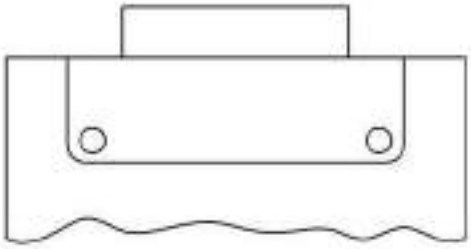

PC BOARD LAYOUT
COMPONENT SIDE

CONNECTOR MATING FACE

PLUG
PC BOARD LAYOUT
COMPONENT SIDE

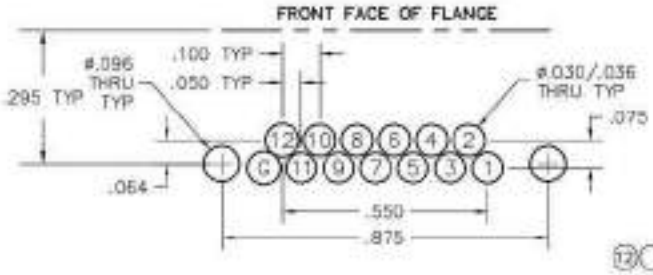

RECEPTACLE
PC BOARD LAYOUT
COMPONENT SIDE

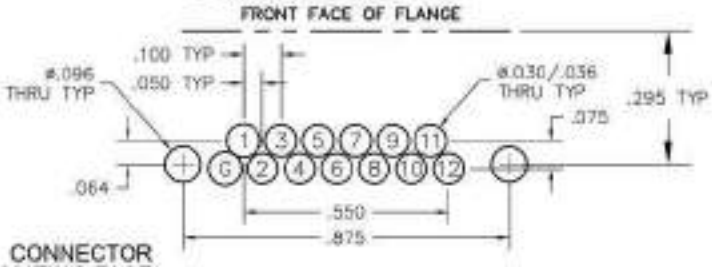

CONNECTOR MATING FACE*
(RECEPTACLE)

12 POSITION

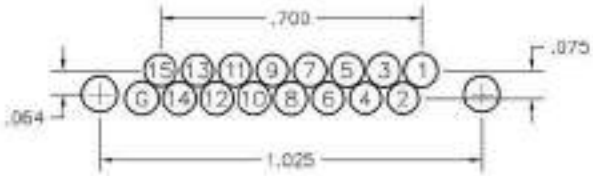

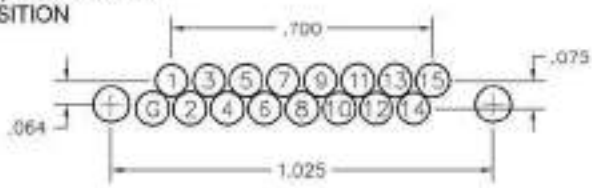

15 POSITION

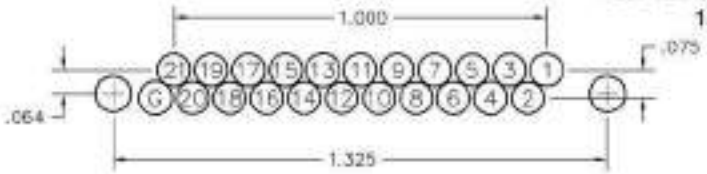

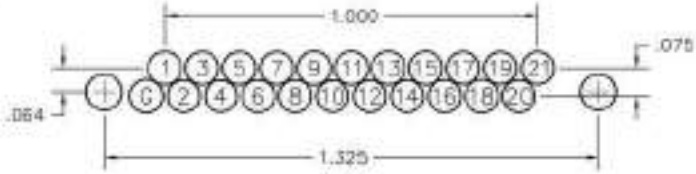

21 POSITION

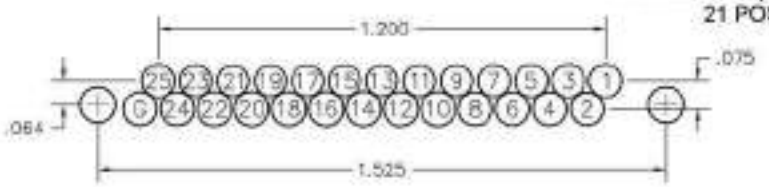

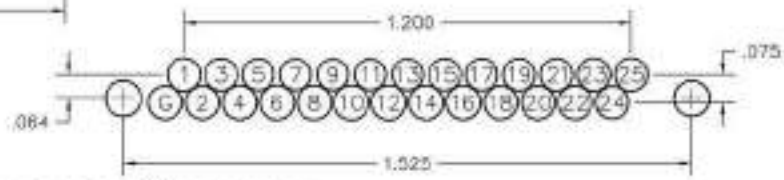

25 POSITION

AirBorn

Horizontal Surface Mount (1 Row)

.050"

4 thru 25 Contacts

MK

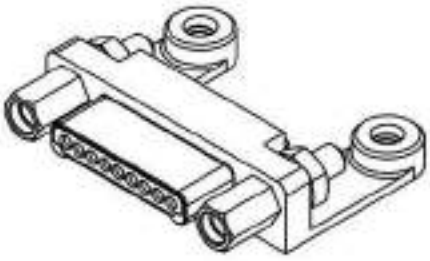

MK-172-009-175-220S
(PLUG)

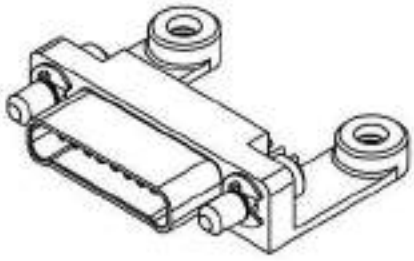

MK-182-009-275-410S
(RECEPTACLE)

MATING MATRIX	
CONNECTOR	MATES WITH
MK-17...	MM-12, MK-18 receptacles
MK-18...	MM-11, MK-17 plugs

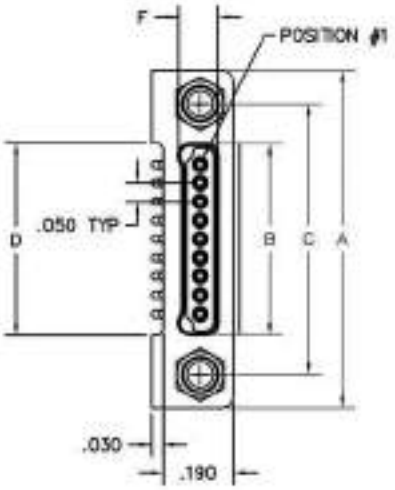

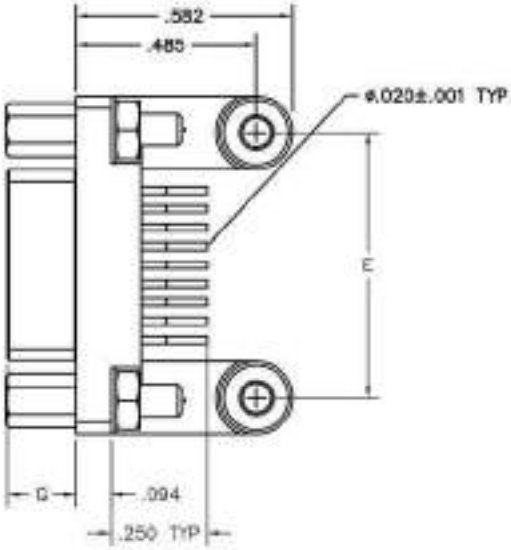

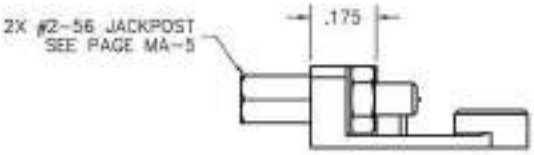

PLUG SHOWN

DIMENSIONS											
SIZE	A	B		C	D	E	F		G		MOUNTING HOLE
		PLUG MAX	RCPT MAX				PLUG MAX	RCPT MAX	PLUG MAX	RCPT MAX	
4	.655	.260	.297	.475	.265	.460	.110	.142	.186	.198	#2-56 THREAD THRU
5	.705	.310	.347	.525	.315	.510					
6	.755	.360	.397	.575	.365	.560					
9	.905	.510	.547	.725	.515	.710					
12	1.055	.660	.697	.875	.665	.860					
15	1.205	.810	.847	1.025	.815	1.010					
21	1.505	1.110	1.147	1.325	1.115	1.310					
25	1.705	1.310	1.347	1.525	1.315	1.510					

PLUG: MK–172–006–175–220S
RECEPTACLE: MK–182–006–275–410S

XX–XXX–XXX–XXX–XXXX–XXX

SERIES | BODY | SIZE | CONTACTS | HARDWARE | OPTIONS

PLUG

SERIES

MK .050" Rugged Metal Horizontal SMT Connector
(MK mates to MK & MM)

BODY

1 1-Row (Sizes 4 thru 25)

BODY STYLE:
7 Plug, Horizontal SMT

BODY MATERIAL:
2 Electroless nickel shell w/ PPS insert
3 Electrodeposited cadmium shell w/ PPS insert ☒
5 Stainless Steel shell w/ PPS insert
A Pure Electro-Deposited Aluminum
K Zinc Nickel Plating
T Nickel Polymer Plating

SIZE

XXX 004, 005, 006, 009, 012, 015, 021, 025

CONTACTS

TYPE CONTACTS/TERMINATIONS:
17 Pin, surface mount

PLATING OPTIONS:
3 50 u" Au contacts; Au terminations
5 50 u" Au contacts; Sn/Pb alloy terminations ☒
7 50 u" Au contacts; SAC305 terminations

HARDWARE

STYLE OF HARDWARE:
00 None
22 Two fixed jacknut assemblies
41 Two turning jackscrews, allen head, retaining ring

POLARIZATION:
0S Standard body polarization

RECEPTACLE

SERIES

MK .050" Rugged Metal Horizontal SMT Connector
(MK mates to MK & MM)

BODY

1 1-Row (Sizes 4 thru 25)

BODY STYLE:
8 Receptacle, Horizontal SMT

BODY MATERIAL:
2 Electroless nickel shell w/ PPS insert
3 Electrodeposited cadmium shell w/ PPS insert ☒
5 Stainless Steel shell w/ PPS insert
A Pure Electro-Deposited Aluminum
K Zinc Nickel Plating
T Nickel Polymer Plating

SIZE

XXX 004, 005, 006, 009, 012, 015, 021, 025

CONTACTS

TYPE CONTACTS/TERMINATIONS:
27 Socket, surface mount

PLATING OPTIONS:
3 50 u" Au contacts; Au terminations
5 50 u" Au contacts; Sn/Pb alloy terminations ☒
7 50 u" Au contacts; SAC305 terminations

HARDWARE

STYLE OF HARDWARE:
00 None
22 Two fixed jacknut assemblies
41 Two turning jackscrews, allen head, retaining ring

POLARIZATION:
0S Standard body polarization

OPTIONS

☒ = Option not RoHS compliant

900 Interfacial Seal

AirBorn

Recommended PC Board Layout

Horizontal SMT
1 ROW
Pos 4 thru 9

CONNECTOR MATING FACE

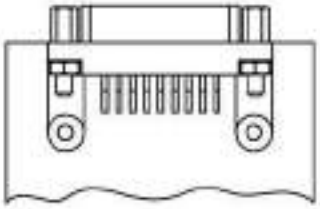

PC BOARD LAYOUT
COMPONENT SIDE

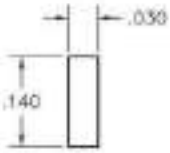

FOOTPRINT/PAD
CONFIGURATION

PLUG
PC BOARD LAYOUT
COMPONENT SIDE

RECEPTACLE
PC BOARD LAYOUT
COMPONENT SIDE

CONNECTOR
MATING FACE*
(RECEPTACLE)

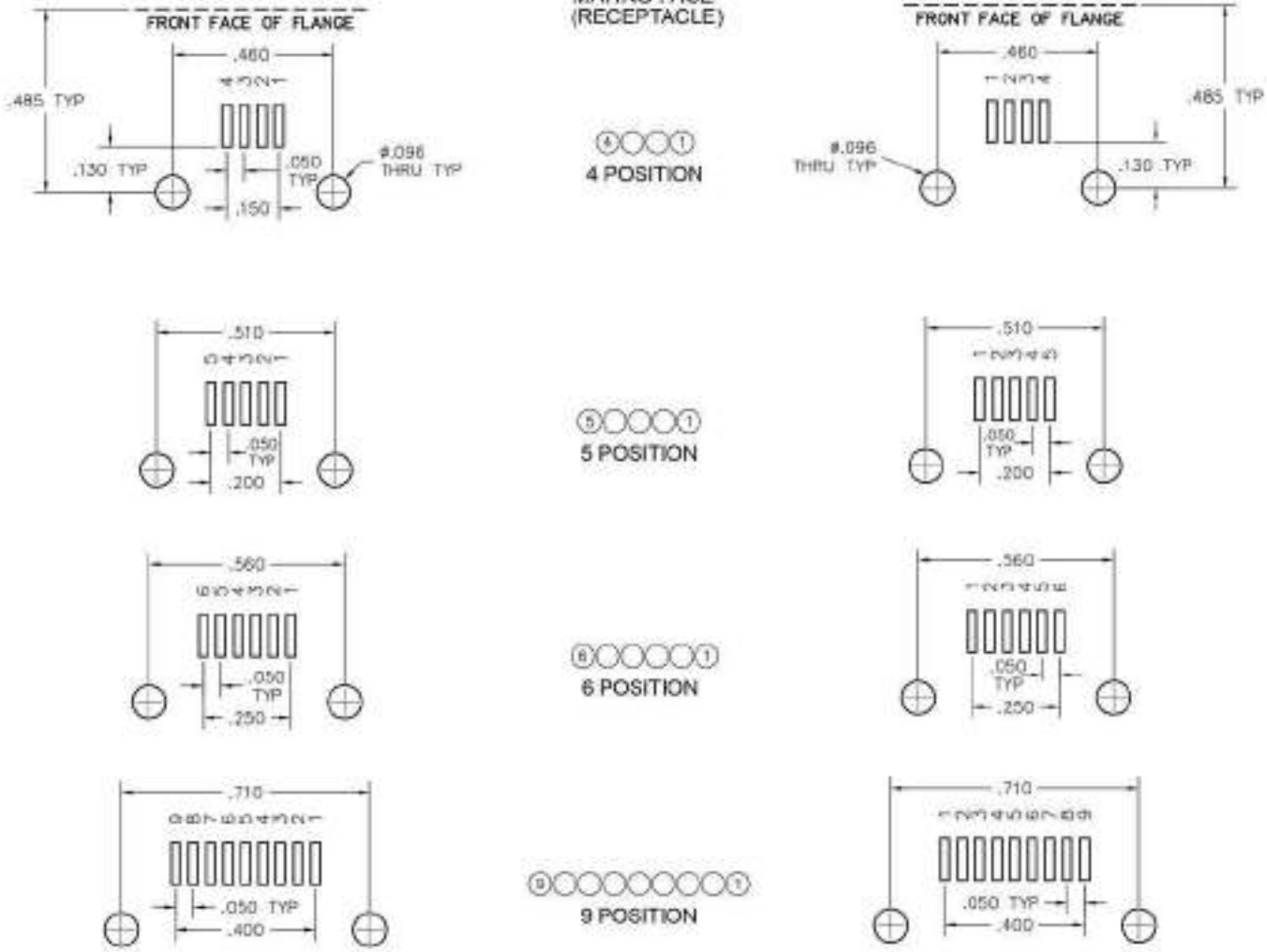

Recommended PC Board Layout

Horizontal SMT
1 ROW
Pos 12 thru 25

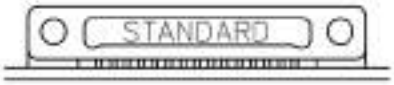

CONNECTOR MATING FACE

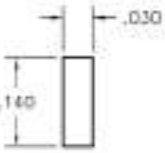

FOOTPRINT/PAD CONFIGURATION

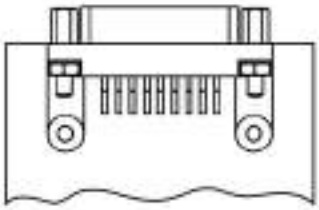

PC BOARD LAYOUT COMPONENT SIDE

PLUG
PC BOARD LAYOUT
COMPONENT SIDE

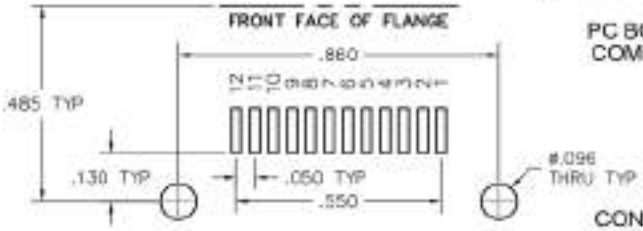

RECEPTACLE
PC BOARD LAYOUT
COMPONENT SIDE

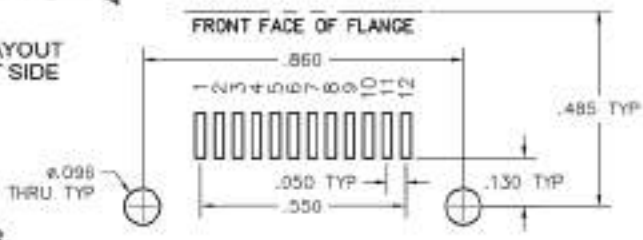

CONNECTOR
MATING FACE*
(RECEPTACLE)

12 POSITION

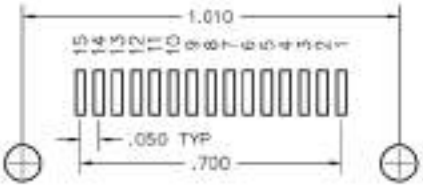

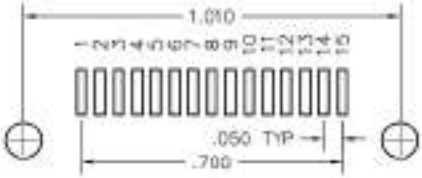

15 POSITION

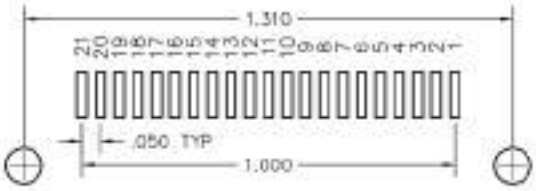

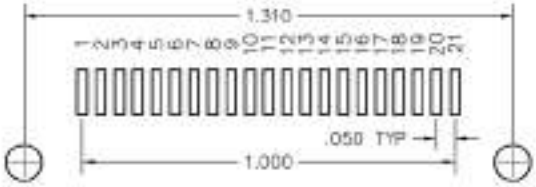

21 POSITION

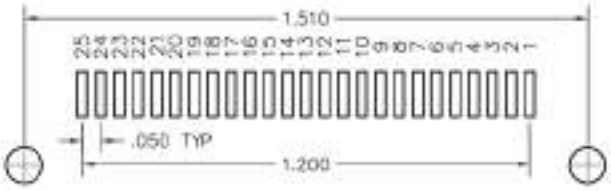

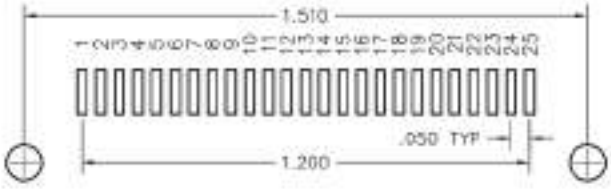

25 POSITION

"MHT" SERIES - .050"
High Temperature

AirBorn

Contents

"MHT" Series
.050" Microminiature PCB and I/O Connectors, High Temperature

MHT-1	Contents	
MHT-2	Specifications	
MHT-3	Performance	
MHT-4	Part number description	
	Micro-D, High Temperature, Cable to Cable Connectors (Metal)	
MHT-5	MMHT - MMHT	Rugged
MHT-7	MQHT - MQHT	Low profile
	Micro-D, High Temperature, Board to Cable Connectors (Metal)	
MHT-9, 11	MKHT - MMHT	Rugged right angle, narrow footprint
MHT-13	MKHT	Board layouts - right angle, narrow footprint
MHT-15, 17	MSHT - MQHT	Low profile right angle, narrow footprint
MHT-19	MSHT	Board layouts - right angle, narrow footprint
MHT-21	MTHT - MTHT	Low Profile right angle, radius, four mounting holes
MHT-23	MTHT	Board layouts - right angle, radius, four mounting holes

Specifications

Materials and Finishes *

Contacts:	Pins: Copper based alloy selected for high temperature applications Sockets: Brass per ASTM B121 / B121M or ASTM B16 / B16M or ASTM B453
Contact Finish:	Gold plate per ASTM B488
Shells:	Aluminum Alloy 6061-T6 per SAE AMS-QQ-A-250/11 or 6061-T6511 per SAE AMS-QQ-A-200/8 Electroless Nickel per SAE AMS2404, Class 3, 500 µ" min
Molded Insulators:	High temperature thermoplastic
Embedment:	High temperature epoxy
Jackscrews, Jackposts and Nuts:	Corrosion resistant steel per ASTM A320 or ASTM A484 / A484M and ASTM A582 / A582M Passivated per SAE AMS2700
Clips and Washers:	Corrosion resistant steel per ASME 18.24 or NASM35333 (For reference only: ASME 18.24 CRS per ASTM A693 and NASM35333 CRS per ASTM A240) Passivated per ASME 18.24 or NASM35333 (For reference only: ASME 18.24 and NASM35333 passivated per SAE AMS2700)
Interfacial Seal Gaskets:	Fluorosilicone per SAE AMS-R-25988
Tolerances:	Unless otherwise specified: Fractions = ±1/64" Decimals = ±.010" Angles = ±5° Wire lengths: insulated/stranded = +1.0"/-0.0" uninsulated/solid = +0.2"/-0.0"

Note: AirBorn can manufacture special configurations for your exact specifications.

* = Reference the above listed specifications or an equivalent industry standard when applicable

AirBorn

Performance
Reference MIL-DTL-83513

AirBorn "M' Series meets or exceeds MIL-DTL-83513 Performance Specifications

Contact Rating:	3-amperes maximum
Solderability:	Terminals (except crimp) tested in accordance with MIL-STD-202, Method 208
Wire Size:	Stranded #24, #26, #28 AWG or solid #25 AWG standard (consult factory for other sizes and types)
Test Voltage:	600 V, RMS, 60 Hz
Operating Temperature:	-55° C to +205° C
Insulation Resistance:	5,000 megohms minimum @ 500 VDC
Durability:	500 connector mating cycles
Salt Spray:	Mated connectors tested in accordance with MIL-STD-1344, Method 1001, Test Condition B
Humidity:	Mated connectors tested in accordance with MIL-STD-1344, Method 1002, Type II (except steps 7a and 7b)
Thermal Shock:	Tested to the temperature extremes of MIL-STD-1344, Method 1003, Test Condition A (except step 3, temperature shall be 205° C)
Contact Resistance:	0.065 volt maximum drop @ 2.5 amps (.026 ohms)
Contact Engaging Force:	6.0 ounce maximum, with .0221 diameter test sleeve
Contact Separating Force:	0.5 ounce minimum, with .0230 diameter test sleeve
Crimp Strength:	5 pound minimum tensile strength

Part Number Description

Each part number consists of at least five elements: series, body description, size (number of contacts), type of contacts, and type of hardware. A sixth element is added whenever special modifications or options are available.

Each catalog page shows the choices available for each of these elements. By selecting one option from each category on the page, you can build a set of connectors to meet your requirements.

Each element is identified by a combination of letters and/or numbers in fixed field lengths, and separated by a hyphen (-). Each space must be filled in to complete the number. When the size, for example, is less than 100, indicate as 009, 051, etc.

Series:
This will always be a four letter designator which will identify the connector series. All .050" connectors begin with the letter "M". The second letter designates the various styles of .050" connectors. "HT" designates high temperature.

Body:
Each digit of the Body Designator will normally identify (1) the number of rows, (2) the style of body, and (3) the body materials. The three digit number to identify the body consists of one digit from each group.

Size:
The size is determined by the number of contacts in the connector, and is an integral part of the part number. Order only sizes shown on the catalog page unless otherwise noted.

Contacts:
Each page also identifies all contact options for a given connector. The first two digits designate the type of contacts and terminations; the third digit designates the plating option.

Hardware:
The hardware designator is four digits; two for style of hardware and two for polarization or wiring instruction. Follow the choices for each connector.

Special Instructions (Options):
Special instructions are referenced by a three digit number added to the end of the part number. The last three digits are included only when applicable. AirBorn will provide individual code numbers as needed.

Note:
Each page is as comprehensive as possible. However, if you do not find a particular connector size or option, please contact the factory for further assistance.

AirBorn

Cable to Cable

.050"

9 thru 100 Contacts

Rugged Metal High Temperature

MMHT

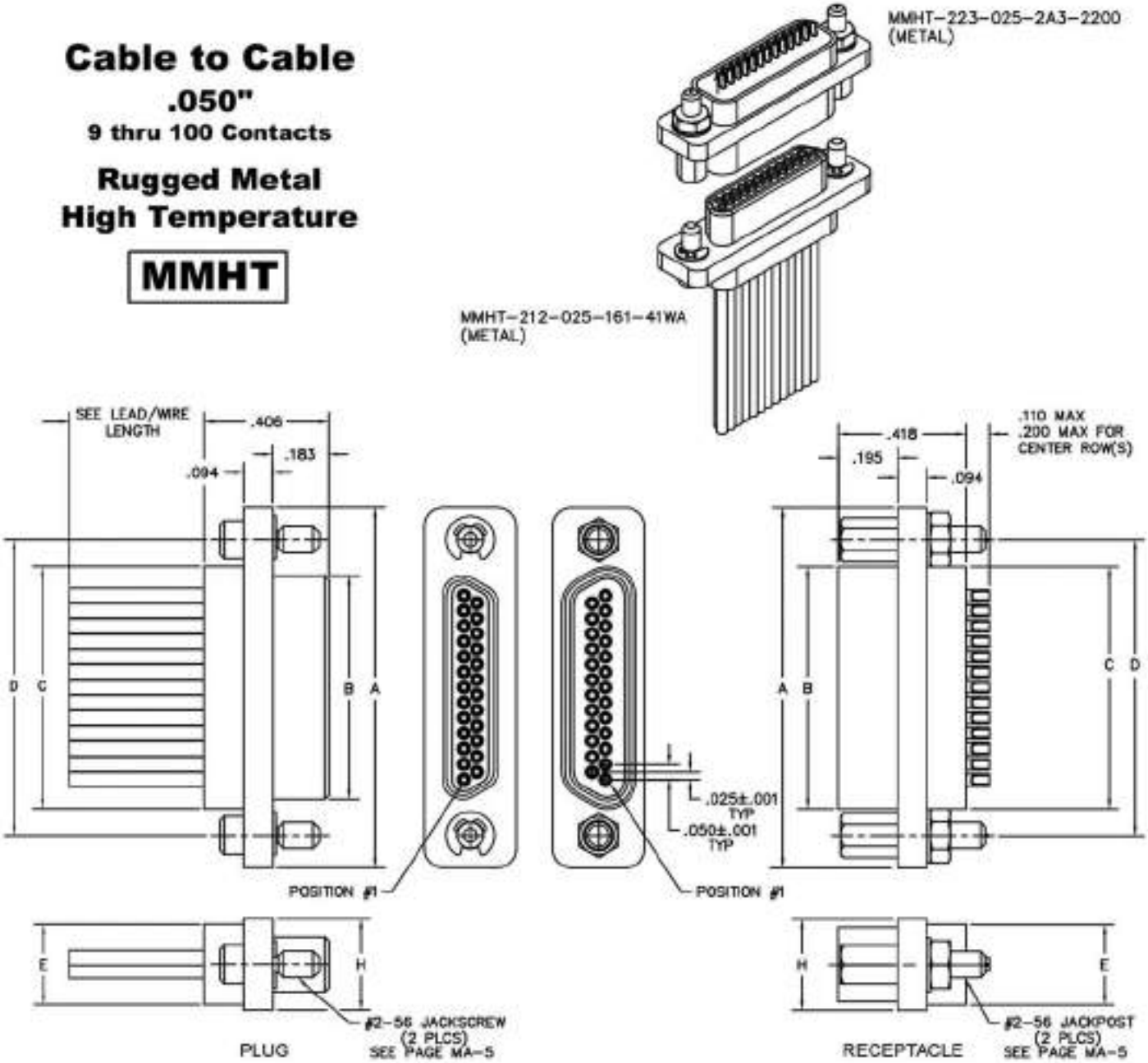

DIMENSIONS									
SIZE	CONTACT ROWS	A	B PLUG MAX	B RCPT MAX	C	D	E POTTING WELL MAX	H	HARDWARE
9	2	.775	.334	.400	.390	.565	.270	.298	#2-56 UNC THD (.092 DIA THRU)
15		.925	.484	.550	.540	.715			
21		1.075	.634	.700	.690	.865			
25		1.175	.734	.800	.790	.965			
31		1.325	.884	.950	.940	1.115			
37		1.475	1.034	1.100	1.090	1.265			
51	3	1.425	.984	1.050	1.040	1.215	.310	.341	
100	4	2.160	1.384	1.508	1.432	1.800	.360	.384	#4-40 UNC THD (.147 DIA THRU)

PLUG: MMHT–212–031–161–41WA
RECEPTACLE: MMHT–222–031–2G3–4500
XXXX–XXX–XXX–XXX–XXXX

PLUG	RECEPTACLE
SERIES	
MMHT .050" Rugged Metal I/O Connector (MMHT mates with MMHT & MKHT receptacles)	MMHT .050" Rugged Metal I/O Connector (MMHT mates with MMHT & MKHT plugs)
BODY	
2 2-Row (Sizes 9 thru 51****)	2 2-Row (Sizes 9 thru 51****)
3 3-Row (Size 51 & 69***)	3 3-Row (Size 51 & 69***)
4 4-Row (Size 100)	4 4-Row (Size 100)
BODY STYLE:	BODY STYLE:
1 Plug, straight, with ears	2 Receptacle, straight, with ears and interfacial seal High temperature.
BODY MATERIAL:	BODY MATERIAL:
2 High temperature thermoplastic with electroless nickel shell	2 High temperature thermoplastic with electroless nickel shell
SIZE	
XXX 009, 015, 021, 025, 031, 037, 051, 100	XXX 009, 015, 021, 025, 031, 037, 051, 100
CONTACTS	
TYPE CONTACTS/TERMINATIONS:	TYPE CONTACTS/TERMINATIONS:
11 Pin, straight, 26 awg solder cup	21 Socket, straight, 26 awg solder cup
1A Pin, straight, 24 awg solder cup	2A Socket, straight, 24 awg solder cup
1D Pin, straight, .109" Lead Length (.018 dia) SEE NOTE 1	2D Socket, straight, .109" Lead Length (.018 dia)
1E Pin, straight, .125" Lead Length (.018 dia) SEE NOTE 1	2E Socket, straight, .125" Lead Length (.018 dia)
1F Pin, straight, .140" Lead Length (.018 dia) SEE NOTE 1	2F Socket, straight, .140" Lead Length (.018 dia)
12 Pin, straight, .150" Lead Length (.018 dia) SEE NOTE 1	22 Socket, straight, .150" Lead Length (.018 dia)
1G Pin, straight, .156" Lead Length (.018 dia) SEE NOTE 1	2G Socket, straight, .156" Lead Length (.018 dia)
1H Pin, straight, .172" Lead Length (.018 dia) SEE NOTE 1	2H Socket, straight, .172" Lead Length (.018 dia)
1J Pin, straight, .187" Lead Length (.018 dia) SEE NOTE 1	2J Socket, straight, .187" Lead Length (.018 dia)
13 Pin, straight, .250" Lead Length (.018 dia) SEE NOTE 1	23 Socket, straight, .250" Lead Length (.018 dia)
1K Pin, straight, .375" Lead Length (.018 dia) SEE NOTE 1	2K Socket, straight, .375" Lead Length (.018 dia)
14 Pin, straight, .500" Lead Length (.018 dia) SEE NOTE 1	2L Socket, straight, .500" Lead Length (.018 dia)
15 Pin, straight, 1.000" Lead Length (.018 dia) SEE NOTE 1	2M Socket, straight, 1.000" Lead Length (.018 dia)
16 Pin, straight, crimped wire	24 Socket, straight, .500" Lead Length (.018 dia) SEE NOTE 1
	25 Socket, straight, 1.000" Lead Length (.018 dia) SEE NOTE 1
	26 Socket, straight, crimped wire
PLATING OPTIONS:	PLATING OPTIONS:
1 50 µ" Au contacts (crimp wire)	1 50 µ" Au contacts (crimp wire)
3 50 µ" Au contacts (solder cup, pigtail)	3 50 µ" Au contacts (solder cup, pigtail)
HARDWARE	
STYLE OF HARDWARE:	STYLE OF HARDWARE:
00 None	00 None
22 Two fixed jacknut assemblies (62")	22 Two fixed jacknut assemblies (62")
41 Two turning jackscrews, allen head, retaining ring (81")	41 Two turning jackscrews, allen head, retaining ring (81")
42 Two long turning jackscrews, allen head, retaining ring (82")	42 Two long turning jackscrews, allen head, retaining ring (82")
43 Two turning jackscrews, slot head, retaining ring (83")	43 Two turning jackscrews, slot head, retaining ring (83")
44 Two long turning jackscrews, slot head, retaining ring (84")	44 Two long turning jackscrews, slot head, retaining ring (84")
45 Two turning jackscrews, allen head, captivated** (85")	45 Two turning jackscrews, allen head, captivated** (85")
POLARIZATION / WIRING	POLARIZATION / WIRING
00 None	00 None
XX For wiring codes, see page MA-3 & MA-4	XX For wiring codes, see page MA-3 & MA-4

* = Use numbers or letters in parenthesis when ordering size 100.
** = Captive hardware is factory installed and non-removable.

NOTE 1 = The leads on these contacts are soft copper suitable for forming.

AirBorn

Cable to Cable

.050"

9 thru 51 Contacts

Low Profile Metal High Temperature

MQHT

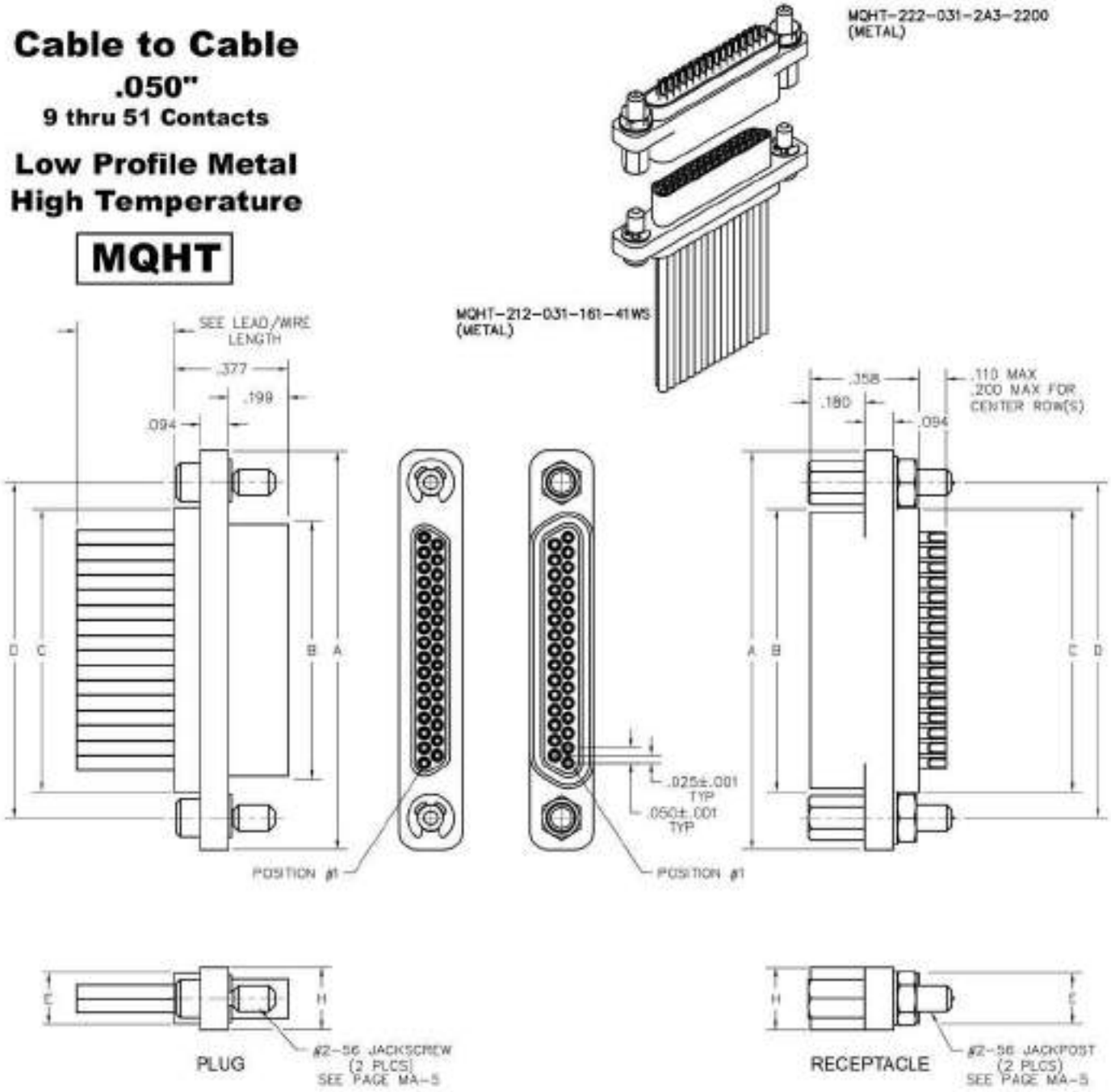

DIMENSIONS									
SIZE	CONTACT ROWS	A	B		C	D	E	H	HARDWARE
			PLUG MAX	RCPT MAX			POTTING WELL MAX		
9	2	.778	.292	.378	.398	.565	.173	.208	#2-56 UNC THD (.092 DIA THRU)
15		.928	.442	.528	.548	.715			
21		1.078	.592	.678	.698	.865			
25		1.178	.692	.778	.798	.965			
31		1.328	.842	.928	.948	1.115			
37		1.478	.992	1.078	1.098	1.265			
51	3	1.428	.942	1.028	1.048	1.215	.220	.250	

PLUG: MQHT–212–031–161–41WS
RECEPTACLE: MQHT–222–031–2G3–4500
XXXX–XXX–XXX–XXX–XXXX

PLUG	RECEPTACLE
SERIES	
MQHT .050" Low Profile Metal I/O Connector (MQHT mates with MQHT & MSHT receptacles)	MQHT .050" Low Profile Metal I/O Connector (MQHT mates with MQHT & MSHT receptacles)
BODY	
2 2-Row (Sizes 9 thru 37)	2 2-Row (Sizes 9 thru 37)
3 3-Row (Size 51)	3 3-Row (Size 51)
BODY STYLE:	BODY STYLE:
1 Plug, straight, with ears. High Temperature.	2 Receptacle, straight, with ears. High temperature.
BODY MATERIAL:	BODY MATERIAL:
2 High temperature thermoplastic with electroless nickel shell	2 High temperature thermoplastic with electroless nickel shell
SIZE	
XXX 009, 015, 021, 025, 031, 037, 051	XXX 009, 015, 021, 025, 031, 037, 051
CONTACTS	
TYPE CONTACTS/TERMINATIONS:	TYPE CONTACTS/TERMINATIONS:
11 Pin, straight, 26 awg solder cup	21 Socket, straight, 26 awg solder cup
1A Pin, straight, 24 awg solder cup	2A Socket, straight, 24 awg solder cup
1D Pin, straight, .109" Lead Length (.018 dia) SEE NOTE 1	2D Socket, straight, .109" Lead Length (.018 dia)
1E Pin, straight, .125" Lead Length (.018 dia) SEE NOTE 1	2E Socket, straight, .125" Lead Length (.018 dia)
1F Pin, straight, .140" Lead Length (.018 dia) SEE NOTE 1	2F Socket, straight, .140" Lead Length (.018 dia)
12 Pin, straight, .150" Lead Length (.018 dia) SEE NOTE 1	22 Socket, straight, .150" Lead Length (.018 dia)
1G Pin, straight, .156" Lead Length (.018 dia) SEE NOTE 1	2G Socket, straight, .156" Lead Length (.018 dia)
1H Pin, straight, .172" Lead Length (.018 dia) SEE NOTE 1	2H Socket, straight, .172" Lead Length (.018 dia)
1J Pin, straight, .187" Lead Length (.018 dia) SEE NOTE 1	2J Socket, straight, .187" Lead Length (.018 dia)
13 Pin, straight, .250" Lead Length (.018 dia) SEE NOTE 1	23 Socket, straight, .250" Lead Length (.018 dia)
1K Pin, straight, .375" Lead Length (.018 dia) SEE NOTE 1	2K Socket, straight, .375" Lead Length (.018 dia)
14 Pin, straight, .500" Lead Length (.018 dia) SEE NOTE 1	2L Socket, straight, .500" Lead Length (.018 dia)
15 Pin, straight, 1.000" Lead Length (.018 dia) SEE NOTE 1	2M Socket, straight, 1.000" Lead Length (.018 dia)
16 Pin, straight, crimped wire	24 Socket, straight, .500" Lead Length (.018 dia) SEE NOTE 1
	25 Socket, straight, 1.000" Lead Length (.018 dia) SEE NOTE 1
	26 Socket, straight, crimped wire
PLATING OPTIONS:	PLATING OPTIONS:
1 50 µ" Au contacts (crimp wire)	1 50 µ" Au contacts (crimp wire)
3 50 µ" Au contacts; 10 µ" Au terminations (solder cup, pigtail)	3 50 µ" Au contacts; 10 µ" Au terminations (solder cup, pigtail)
HARDWARE	
STYLE OF HARDWARE:	STYLE OF HARDWARE:
00 None	00 None
22 Two fixed jacknut assemblies	22 Two fixed jacknut assemblies
41 Two turning jackscrews, allen head, retaining ring	41 Two turning jackscrews, allen head, retaining ring
42 Two long turning jackscrews, allen head, retaining ring	42 Two long turning jackscrews, allen head, retaining ring
43 Two turning jackscrews, slot head, retaining ring	43 Two turning jackscrews, slot head, retaining ring
44 Two long turning jackscrews, slot head, retaining ring	44 Two long turning jackscrews, slot head, retaining ring
45 Two turning jackscrews, allen head, captivated*	45 Two turning jackscrews, allen head, captivated*
POLARIZATION / WIRING	POLARIZATION / WIRING
00 None	00 None
For wiring codes, see page MA-3 & MA-4	XX For wiring codes, see page MA-3 & MA-4

XX

* = Captive hardware is factory installed and non-removable.

NOTE 1 = The leads on these contacts are soft copper suitable for forming.

AirBorn

Board (Narrow Footprint) to Cable

.050"

9 thru 100 Contacts

Rugged Board Mount High Temperature

MKHT

Rugged Cable High Temperature

MMHT

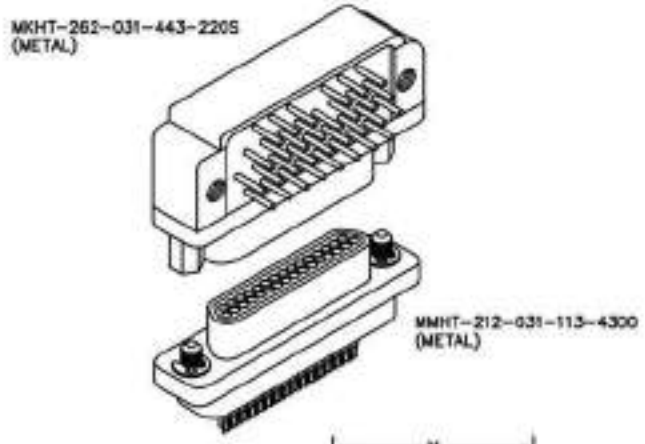

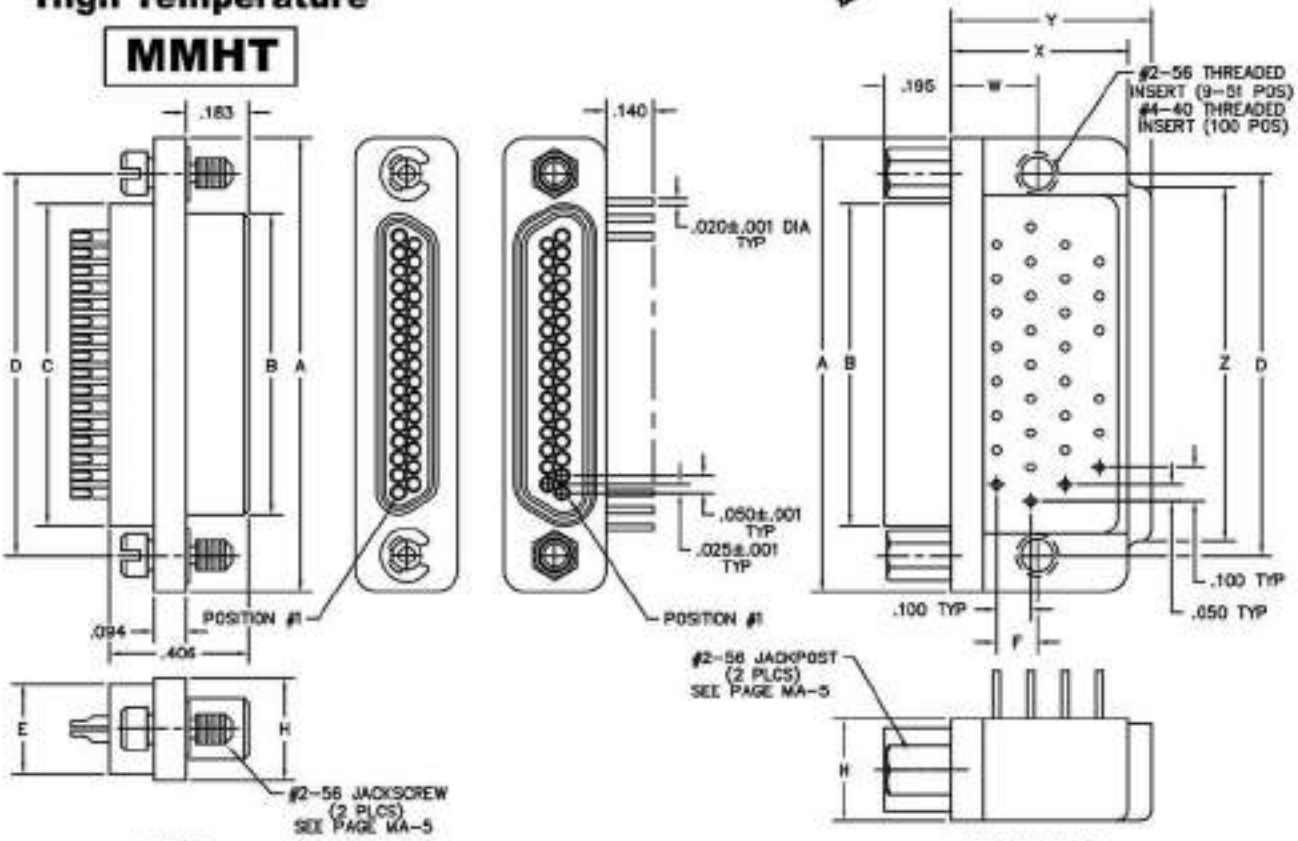

DIMENSIONS															
SIZE	CONTACT ROWS	A	B		C	D	E	F	H	W	X MAX	Y MAX	Z	HARDWARE
			PLUG MAX	RCPT MAX			POTTING WELL MAX							
9	2	.775	.334	.400	.390	.565	.270	.020	.298	.250	.420	.420	.775	#2-56 UNC THD
15		.925	.484	.550	.540	.715		.120					.925	
21		1.075	.634	.700	.690	.865							1.075	
25		1.175	.734	.800	.790	.965							1.175	
31		1.325	.884	.950	.940	1.115					.450	.520	1.080	
37		1.475	1.034	1.100	1.090	1.265							1.180	
51	3	1.425	.984	1.050	1.040	1.215	.310	.150	.341	.300	.430	.650	1.220	
100	4	2.160	1.384	1.506	1.432	1.800	.350	.200	.384	.400	.590	1.000	1.810	#4-40 UNC THD

AirBorn

PLUG: MMHT– 212 – 031 – 113 – 4300
RECEPTACLE: MKHT– 262 – 031 – 443 – 220S
XXXX – XXX – XXX – XXX – XXXX

PLUG	RECEPTACLE
SERIES	
MMHT .050" Rugged Metal I/O Connector (MMHT mates with MMHT & MKHT receptacles)	MKHT .050" Rugged Metal PC Board Mount Connector (MKHT mates with MMHT plugs)
BODY	
2 2-Row (Sizes 9 thru 37) 3 3-Row (Size 51) 4 4-Row (Size 100)	2 2-Row (Sizes 9 thru 37) 3 3-Row (Size 51) 4 4-Row (Size 100)
BODY STYLE: 1 Plug, straight, with ears. High temperature.	BODY STYLE: 6 Receptacle, right angle, narrow footprint, w/ threaded inserts and interfacial seal. High temperature.
BODY MATERIAL: 2 High temperature thermoplastic with electroless nickel shell	BODY MATERIAL: 2 High temperature thermoplastic with electroless nickel shell
SIZE	
XXX 009, 015, 021, 025, 031, 037, 051, 100	XXX 009, 015, 021, 025, 031, 037, 051, 100
CONTACTS	
TYPE CONTACTS/TERMINATIONS: 11 Pin, straight, solder cup 14 Pin, straight, .500" pigtails (.018 dia) 15 Pin, straight, 1.000" pigtails (.018 dia) 16 Pin, straight, crimped wire	TYPE CONTACTS/TERMINATIONS: 43 Socket, right angle, dip solder, .109" x .020" dia 44 Socket, right angle, dip solder, .140" x .020" dia 45 Socket, right angle, dip solder, .172" x .020" dia
PLATING OPTIONS: 1 50 µ" Au contacts (crimp wire) 3 50 µ" Au contacts: 10 µ" Au terminations (solder cup, pigtail)	PLATING OPTIONS: 3 50 µ" Au contacts: 10 µ" Au terminations
HARDWARE	
STYLE OF HARDWARE: 00 None 41 Two turning jackscrews, allen head, retaining ring (81*) 42 Two long turning jackscrews, allen head, retaining ring (82*) 43 Two turning jackscrews, slot head, retaining ring (83*) 44 Two long turning jackscrews, slot head, retaining ring (84*) 45 Two turning jackscrews, allen head, captivated** (85*)	STYLE OF HARDWARE: 00 None 22 Two fixed jacknut assemblies (62*)
POLARIZATION / WIRING: 00 None XX For wiring codes, see page MA-3 & MA-4	POLARIZATION / WIRING 0S Standard body polarization

* = Use number in parenthesis when ordering size 100.
** = Captive hardware is factory installed and non-removable.

AirBorn

Board (Narrow Footprint) to Cable .050"

9 thru 100 Contacts

Rugged Board Mount High Temperature — **MKHT**

Rugged Cable High Temperature — **MMHT**

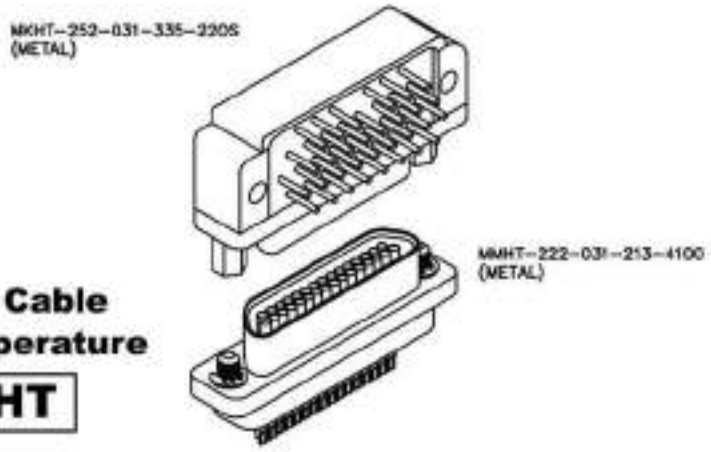

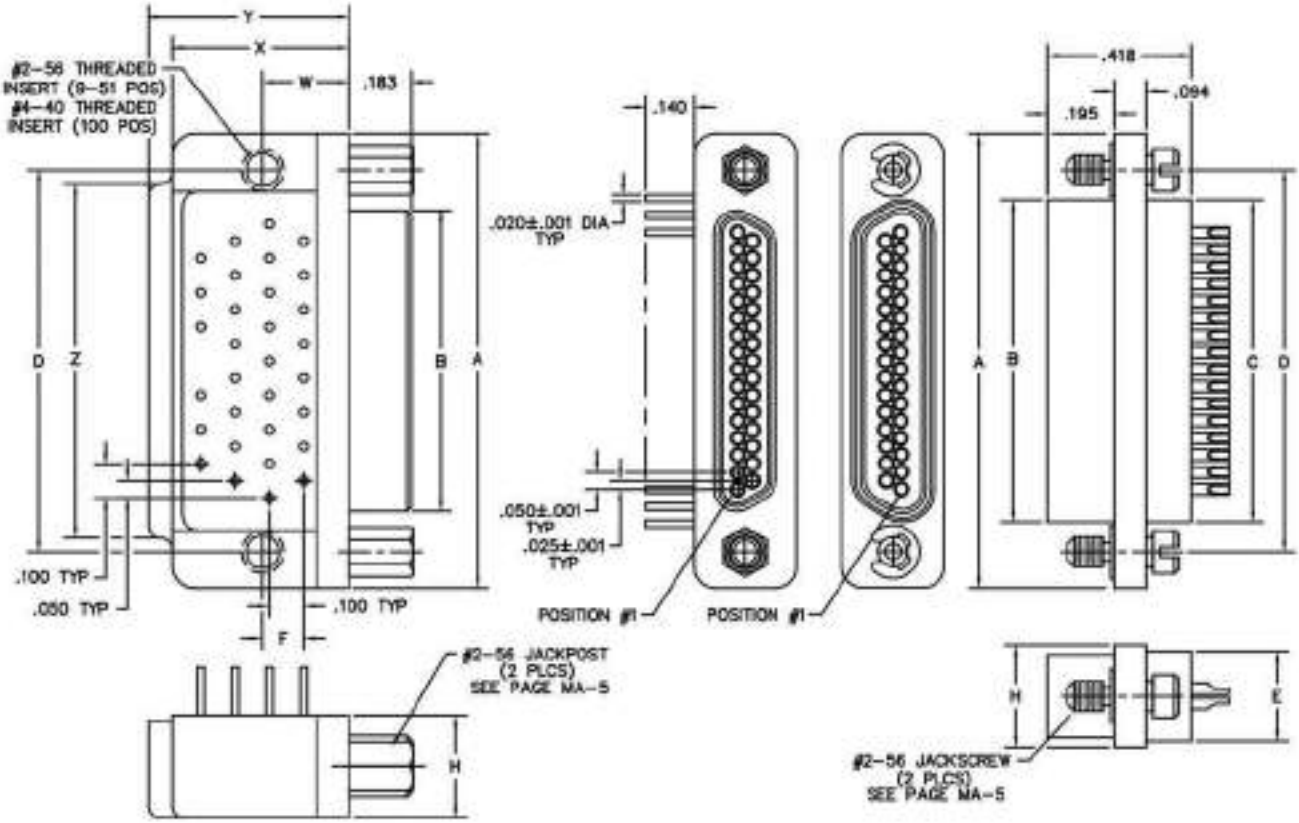

PLUG

RECEPTACLE

DIMENSIONS															
SIZE	CONTACT ROWS	A	B PLUG MAX	B RCPT MAX	C	D	E POTTING WELL MAX	F	H	W	X MAX	Y MAX	Z	HARDWARE
9	2	.775	.334	.400	.390	.565	.270	.020	.298	.250	.420	.420	.775	#2-56 UNC THD
15		.925	.484	.550	.540	.715		.120					.925	
21		1.075	.634	.700	.690	.865							1.075	
25		1.175	.734	.800	.790	.965							1.175	
31		1.325	.884	.950	.940	1.115					.450	.520	1.080	
37		1.475	1.034	1.100	1.090	1.265							1.180	
51	3	1.425	.984	1.050	1.040	1.215	.310	.150	.341	.300	.430	.650	1.220	
100	4	2.160	1.384	1.508	1.432	1.800	.360	.200	.384	.400	.590	1.000	1.810	#4-40 UNC THD

AirBorn

PLUG: MKHT–252–031–335–220S
RECEPTACLE: MMHT–222–031–213–4100
XXXX–XXX–XXX–XXX–XXXX–XXX

PLUG	RECEPTACLE
SERIES	
MKHT .050" Rugged Metal PC Board Mount Connector (MKHT mates with MMHT receptacles)	MMHT .050" Rugged Metal I/O Connector (MMHT mates with MKHT & MMHT plugs)
BODY	
2 2-Row (Sizes 9 thru 37) 3 3-Row (Size 51) 4 4-Row (Size 100)	2 2-Row (Sizes 9 thru 37) 3 3-Row (Size 51) 4 4-Row (Size 100)
BODY STYLE: 5 Plug, right angle, narrow footprint, w/ threaded inserts. High temperature.	BODY STYLE: 2 Receptacle, straight, with ears. High temperature.
BODY MATERIAL: 2 High temperature thermoplastic with electroless nickel shell	BODY MATERIAL: 2 High temperature thermoplastic with electroless nickel shell
SIZE	
XXX 009, 015, 021, 025, 031, 037, 051, 100	XXX 009, 015, 021, 025, 031, 037, 051, 100
CONTACTS	
TYPE CONTACTS/TERMINATIONS: 32 Pin, right angle, dip solder, .109" 33 Pin, right angle, dip solder, .140" 34 Pin, right angle, dip solder, .172"	TYPE CONTACTS/TERMINATIONS: 21 Socket, straight, solder cup 24 Socket, straight, .500" pigtails (.018 dia) 25 Socket, straight, 1.000" pigtails (.018 dia) 26 Socket, straight, crimped wire
PLATING OPTIONS: 3 50 µ" Au contacts: 10 µ" Au terminations	PLATING OPTIONS: 1 50 µ" Au contacts (crimp wire) 3 50 µ" Au contacts: 10 µ" Au terminations (solder cup, pigtail)
HARDWARE	
STYLE OF HARDWARE: 00 None 22 Two fixed jacknut assemblies (62*)	STYLE OF HARDWARE: 00 None 41 Two turning jackscrews, allen head, retaining ring (81*) 42 Two long turning jackscrews, allen head, retaining ring (82*) 43 Two turning jackscrews, slot head, retaining ring (83*) 44 Two long turning jackscrews, slot head, retaining ring (84*) 45 Two turning jackscrews, allen head, captivated** (85*)
POLARIZATION / WIRING: 0S Standard body polarization	POLARIZATION / WIRING 00 None XX For wiring codes, see page MA-3 & MA-4
OPTIONS	
	900 Interfacial sealing gasket

* = Use number in parenthesis when ordering size 100.
** = Captive hardware is factory installed and non-removable.

AirBorn

Recommended PC Board Layout

Right Angle, Narrow Footprint
Standard Polarization

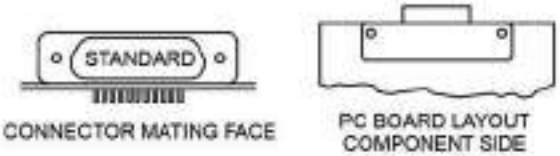

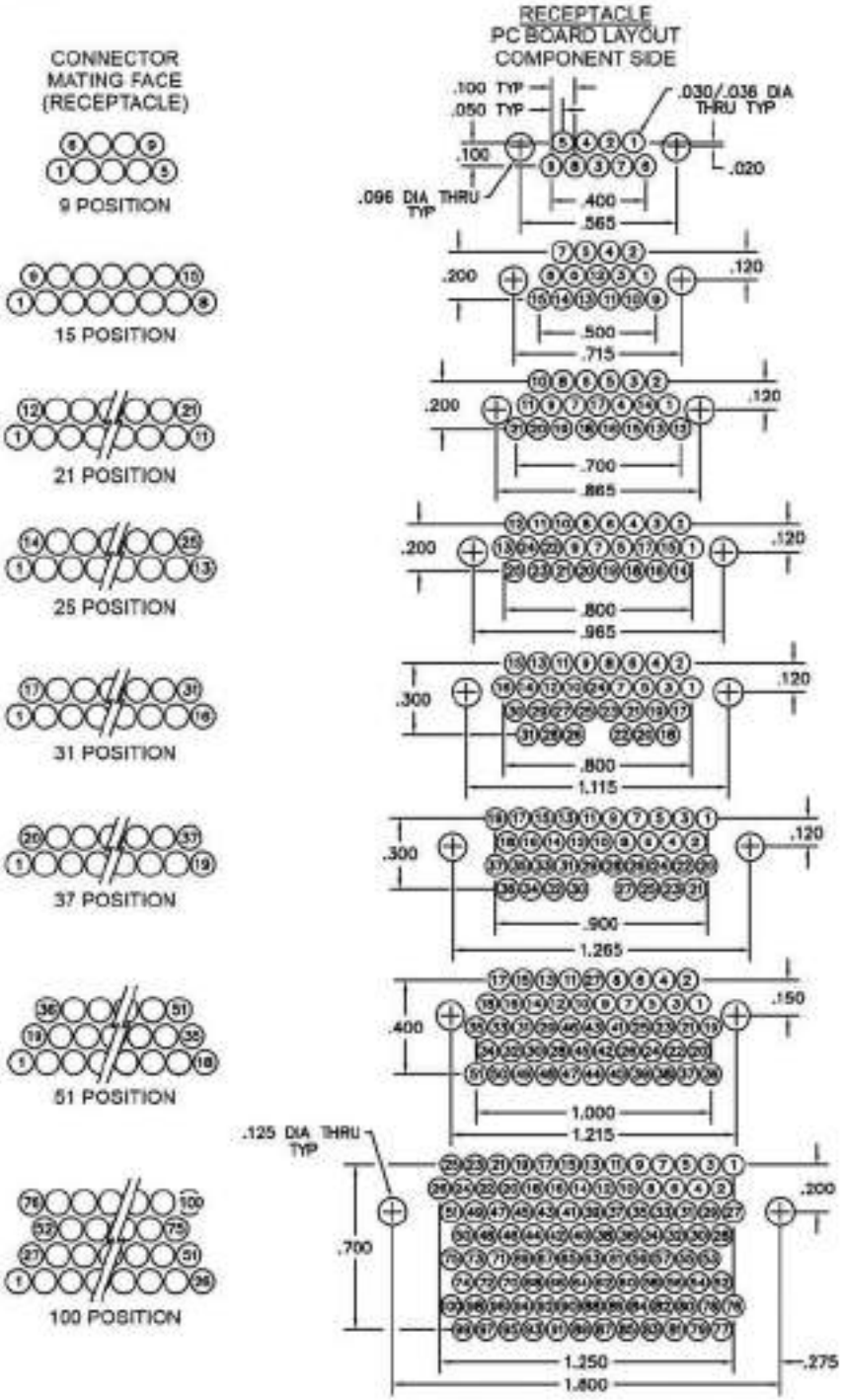

Recommended PC Board Layout

Right Angle, Narrow Footprint
Standard Polarization

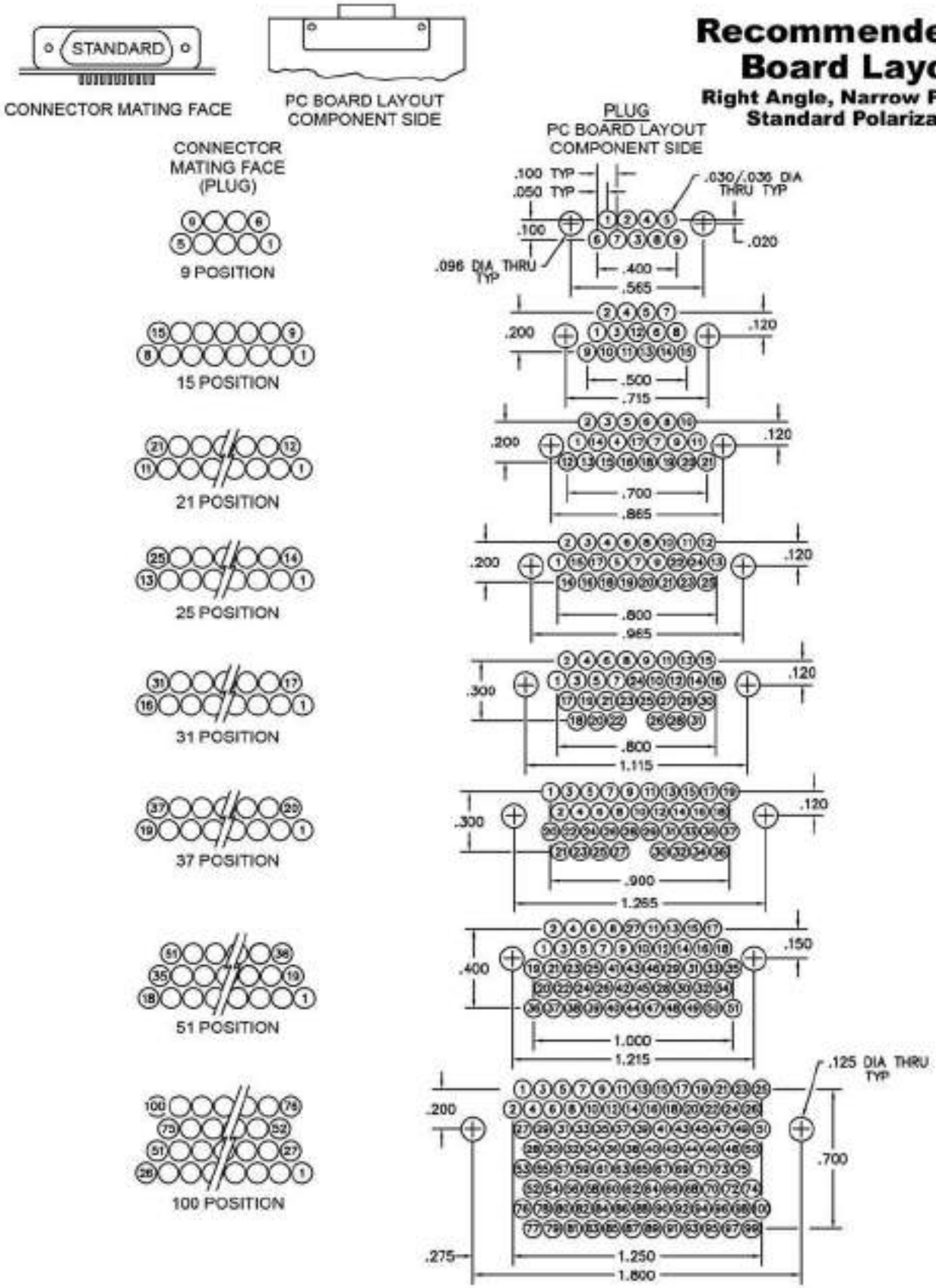

AirBorn

Board (Narrow Footprint) to Cable .050"

9 thru 51 Contacts

Low Profile Board Mount High Temperature

MSHT

Low Profile Cable High Temperature

MQHT

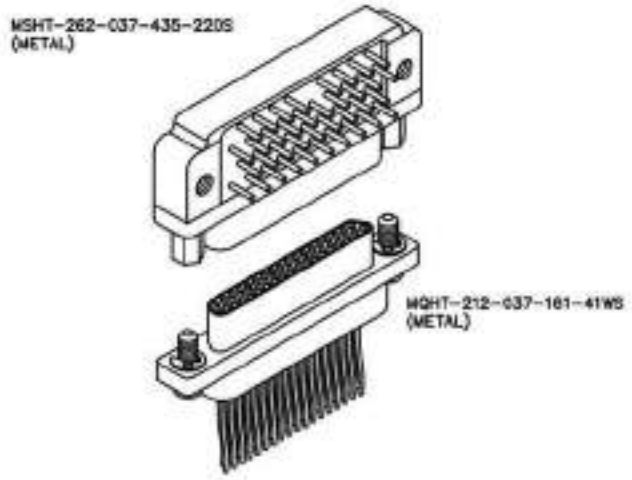

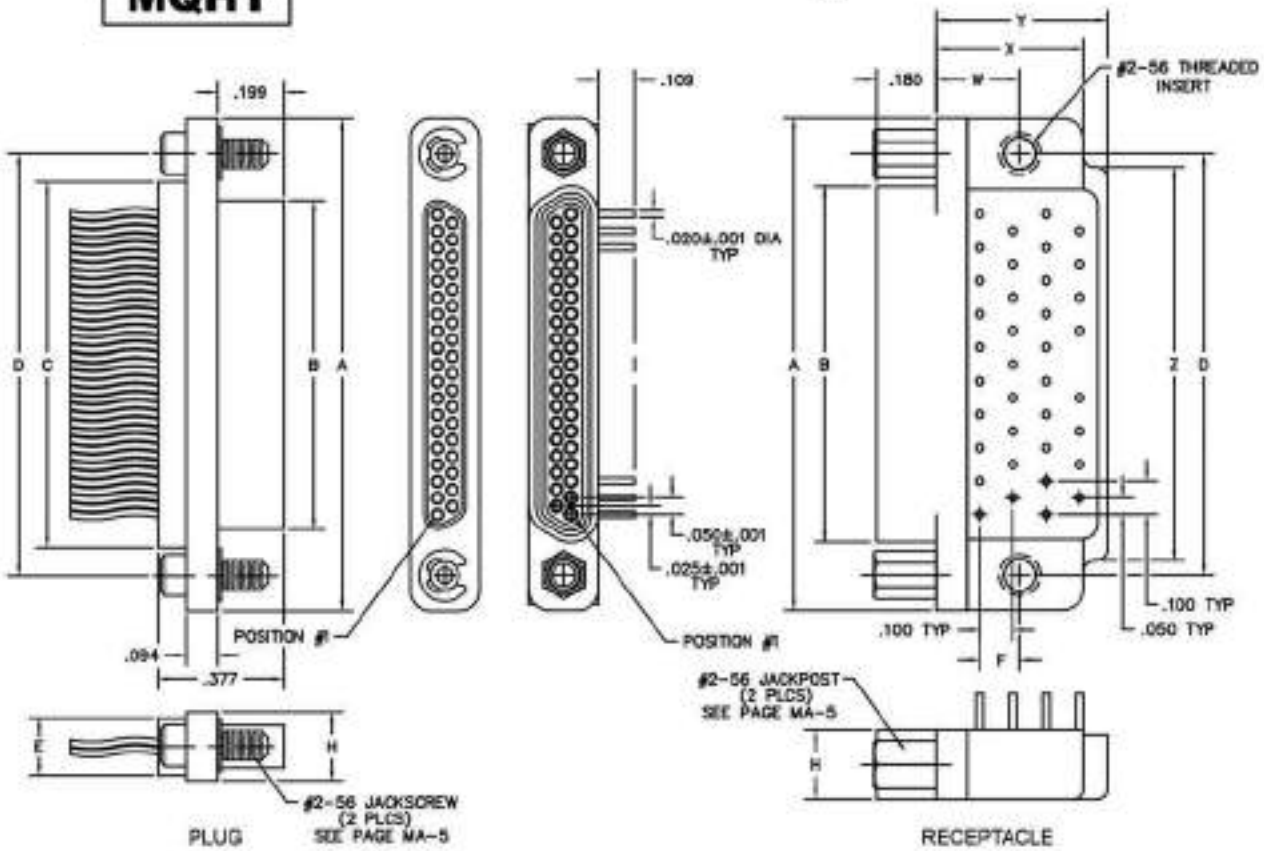

DIMENSIONS															
SIZE	CONTACT ROWS	A	B PLUG MAX	B RCPT MAX	C	D	E POTTING WELL MAX	F	H	W	X MAX	Y MAX	Z	HARDWARE
9	2	.778	.292	.378	.398	.565	.173	.020	.208	.250	.420	.420	.775	#2-56 UNC THD
15		.928	.442	.528	.548	.715		.120					.925	
21		1.078	.592	.678	.698	.865							1.075	
25		1.178	.692	.778	.798	.965							1.175	
31		1.328	.842	.928	.948	1.115					.450	.520	1.080	
37		1.478	.992	1.078	1.098	1.265					.450		1.180	
51	3	1.428	.942	1.028	1.048	1.215	.220	.150	.250	.300	.425	.650	1.220	

PLUG: MQHT-212-037-161-41WS
RECEPTACLE: MSHT-262-037-433-22OS
XXXX-XXX-XXX-XXX-XXXX

PLUG	RECEPTACLE
SERIES	
MQHT .050" Low Profile Metal I/O Connector (MQHT mates with MQHT & MSHT receptacles)	MSHT .050" Low Profile Metal PC Board Mount Connector (MSHT mates with MQHT plugs)
BODY	
2 2-Row (Sizes 9 thru 37) 3 3-Row (Size 51)	2 2-Row (Sizes 9 thru 37) 3 3-Row (Size 51)
BODY STYLE: 1 Plug, straight, with ears. High temperature.	BODY STYLE: 6 Receptacle, right angle, narrow footprint, w/ threaded inserts. High temperature.
BODY MATERIAL: 2 High temperature thermoplastic with electroless nickel shell	BODY MATERIAL: 2 High temperature thermoplastic with electroless nickel shell
SIZE	
XXX 009, 015, 021, 025, 031, 037, 051	XXX 009, 015, 021, 025, 031, 037, 051
CONTACTS	
TYPE CONTACTS/TERMINATIONS: 11 Pin, straight, solder cup 14 Pin, straight, .500" pigtails (.018 dia) 15 Pin, straight, 1.000" pigtails (.018 dia) 16 Pin, straight, crimped wire	TYPE CONTACTS/TERMINATIONS: 43 Socket, right angle, dip solder, .109" x .020" dia 44 Socket, right angle, dip solder, .140" x .020" dia 45 Socket, right angle, dip solder, .172" x .020" dia
PLATING OPTIONS: 1 50 µ" Au contacts (crimp wire) 3 50 µ" Au contacts: 10 µ" Au terminations (solder cup, pigtail)	PLATING OPTIONS: 3 50 µ" Au contacts: 10 µ" Au terminations
HARDWARE	
STYLE OF HARDWARE: 00 None 41 Two turning jackscrews, allen head, retaining ring 42 Two long turning jackscrews, allen head, retaining ring 43 Two turning jackscrews, slot head, retaining ring 44 Two long turning jackscrews, slot head, retaining ring 45 Two turning jackscrews, allen head, captivated*	STYLE OF HARDWARE: 00 None 22 Two fixed jacknut assemblies
POLARIZATION / WIRING: 00 None XX For wiring codes, see page MA-3 & MA-4	POLARIZATION / WIRING 0S Standard body polarization

* = Captive hardware is factory installed and non-removable.

AirBorn

Board (Narrow Footprint) to Cable

.050"

9 thru 51 Contacts

Low Profile Board Mount High Temperature

MSHT

Low Profile Cable High Temperature

MQHT

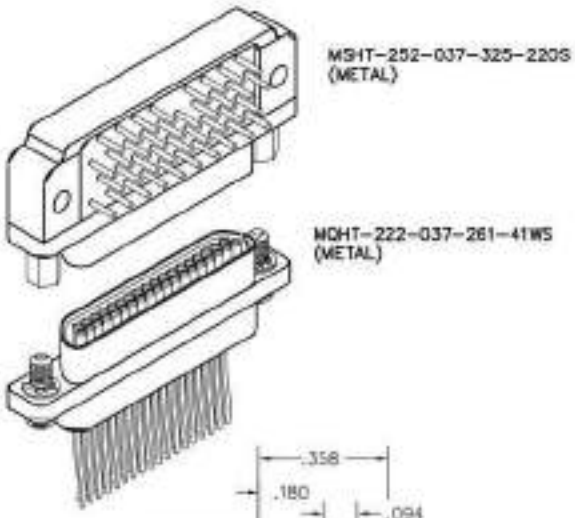

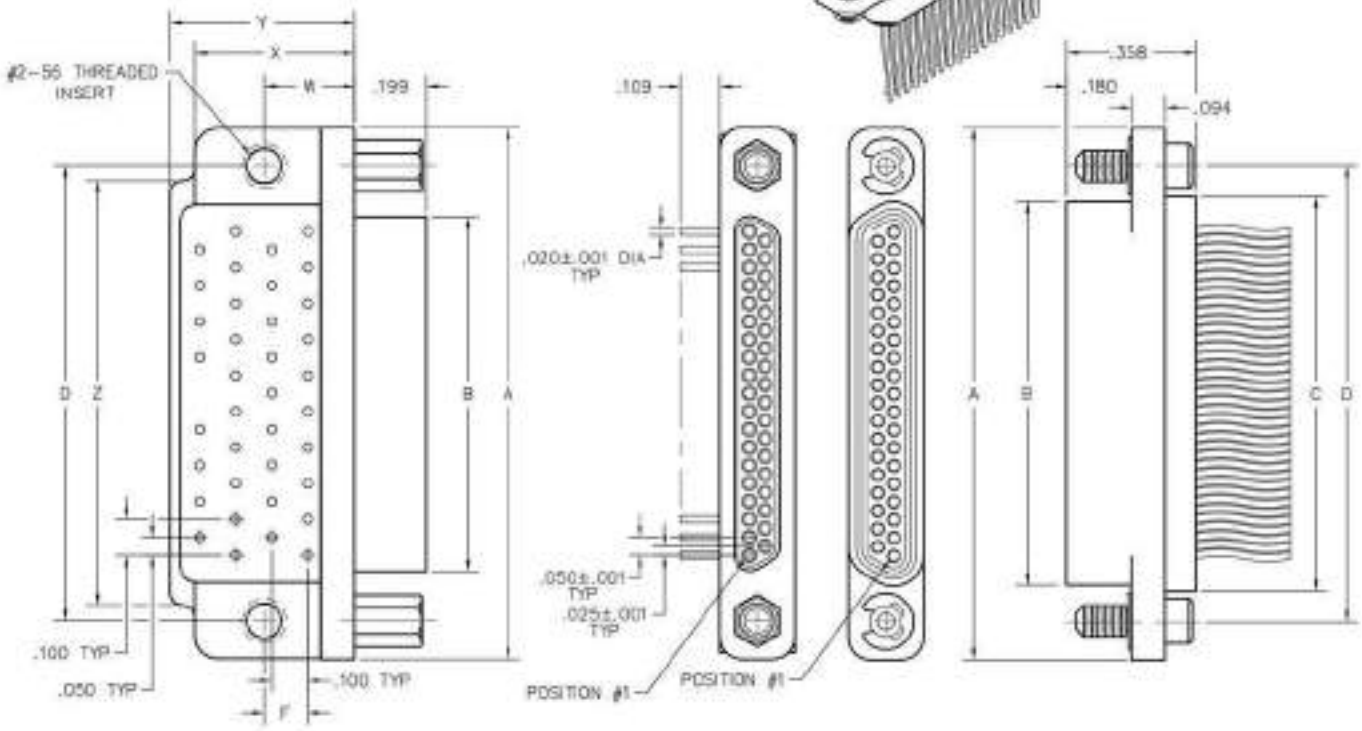

PLUG

RECEPTACLE

DIMENSIONS														
SIZE	CONTACT ROWS	A	B PLUG MAX	B RCPT MAX	C	D	E POTTING WELL MAX	F	H	W	X MAX	Y MAX	Z	HARDWARE
9	2	.778	.292	.378	.398	.565	.173	.020	.208	.250	.420	.420	.775	#2-56 UNC THD
15		.926	.442	.528	.548	.715		.120					.925	
21		1.078	.592	.678	.698	.865							1.075	
25		1.178	.692	.778	.798	.965							1.175	
31		1.328	.842	.928	.948	1.115					.450	.520	1.060	
37		1.478	.992	1.078	1.098	1.265					.450		1.180	
51	3	1.428	.942	1.028	1.048	1.215	.220	.150	.250	.300	.425	.650	1.220	

AirBorn

PLUG: MSHT–252–037–323–220S
RECEPTACLE: MQHT–222–037–261–41WS
XXXX–XXX–XXX–XXX–XXXX

PLUG	RECEPTACLE
SERIES	
MSHT .050" Low Profile Metal PC Board Mount Connector (MSHT mates with MQHT receptacles)	MQHT .050" Low Profile Metal I/O Connector (MQHT mates with MQHT & MSHT plugs)
BODY	
2 2-Row (Sizes 9 thru 37) 3 3-Row (Size 51)	2 2-Row (Sizes 9 thru 37) 3 3-Row (Size 51)
BODY STYLE: 5 Plug, right angle, narrow footprint, w/ threaded inserts. High temperature.	BODY STYLE: 2 Receptacle, straight, with ears. High temperature.
BODY MATERIAL: 2 High temperature thermoplastic with electroless nickel shell	BODY MATERIAL: 2 High temperature thermoplastic with electroless nickel shell
SIZE	
XXX 009, 015, 021, 025, 031, 037, 051	XXX 009, 015, 021, 025, 031, 037, 051
CONTACTS	
TYPE CONTACTS/TERMINATIONS: 32 Pin, right angle, dip solder, .109" 33 Pin, right angle, dip solder, .140" 34 Pin, right angle, dip solder, .172"	TYPE CONTACTS/TERMINATIONS: 21 Socket, straight, solder cup 24 Socket, straight, .500" pigtails (.018 dia) 25 Socket, straight, 1.000" pigtails (.018 dia) 26 Socket, straight, crimped wire
PLATING OPTIONS: 3 50 µ" Au contacts: 10 µ" Au terminations	PLATING OPTIONS: 1 50 µ" Au contacts (crimp wire) 3 50 µ" Au contacts: 10 µ" Au terminations (solder cup, pigtail)
HARDWARE	
STYLE OF HARDWARE: 00 None 22 Two fixed jacknut assemblies	STYLE OF HARDWARE: 00 None 41 Two turning jackscrews, allen head, retaining ring 42 Two long turning jackscrews, allen head, retaining ring 43 Two turning jackscrews, slot head, retaining ring 44 Two long turning jackscrews, slot head, retaining ring 45 Two turning jackscrews, allen head, captivated*
POLARIZATION / WIRING: 06 Standard body polarization	POLARIZATION / WIRING 00 None XX For wiring codes, see page MA-3 & MA-4

* = Captive hardware is factory installed and non-removable.

AirBorn

Recommended PC Board Layout

Right Angle, Narrow Footprint
Standard Polarization

CONNECTOR MATING FACE

PC BOARD LAYOUT
COMPONENT SIDE

CONNECTOR
MATING FACE
(RECEPTACLE)

RECEPTACLE
PC BOARD LAYOUT
COMPONENT SIDE

9 POSITION

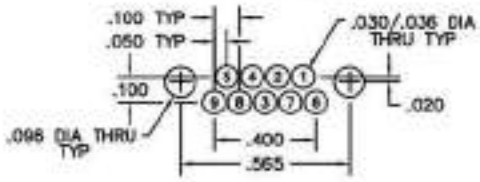

15 POSITION

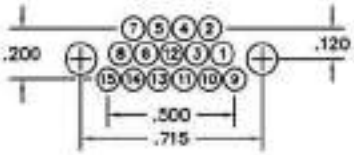

21 POSITION

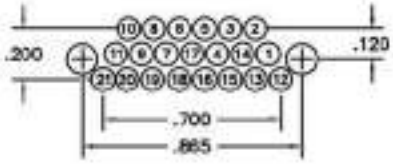

25 POSITION

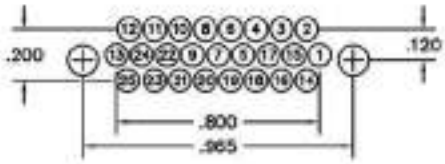

31 POSITION

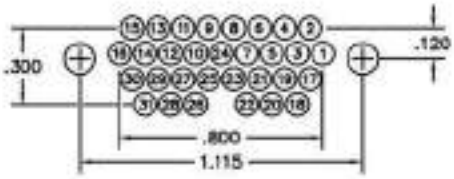

37 POSITION

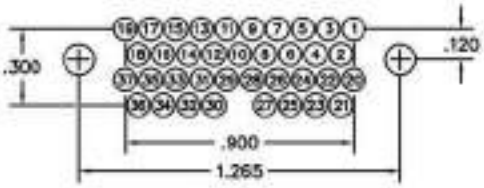

51 POSITION

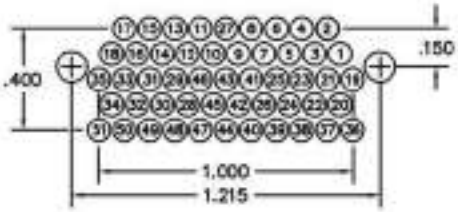

AirBorn

CONNECTOR MATING FACE

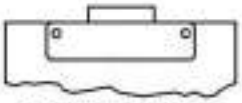

PC BOARD LAYOUT
COMPONENT SIDE

Recommended PC Board Layout

Right Angle, Narrow Footprint
Standard Polarization

CONNECTOR MATING FACE (PLUG)

PLUG
PC BOARD LAYOUT
COMPONENT SIDE

9 POSITION

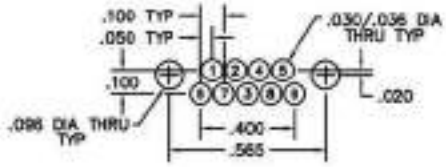

15 POSITION

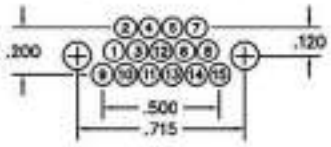

21 POSITION

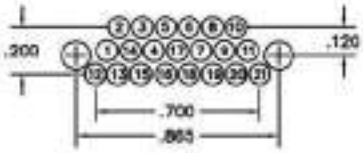

25 POSITION

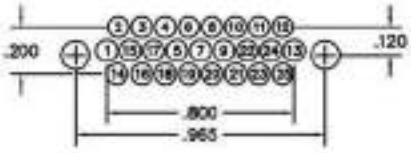

31 POSITION

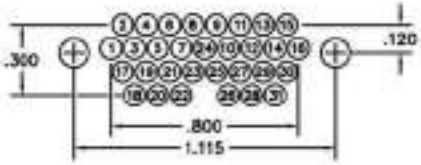

37 POSITION

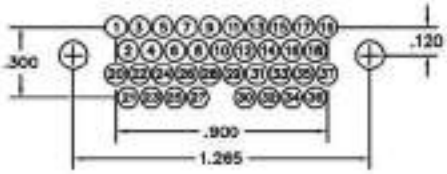

51 POSITION

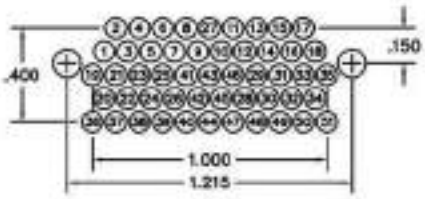

AirBorn

Cable to Board
.050"
9 thru 51 Contacts

Low Profile Cable
High Temperature

MTHT

Low Profile Board Mount
High Temperature

MTHT

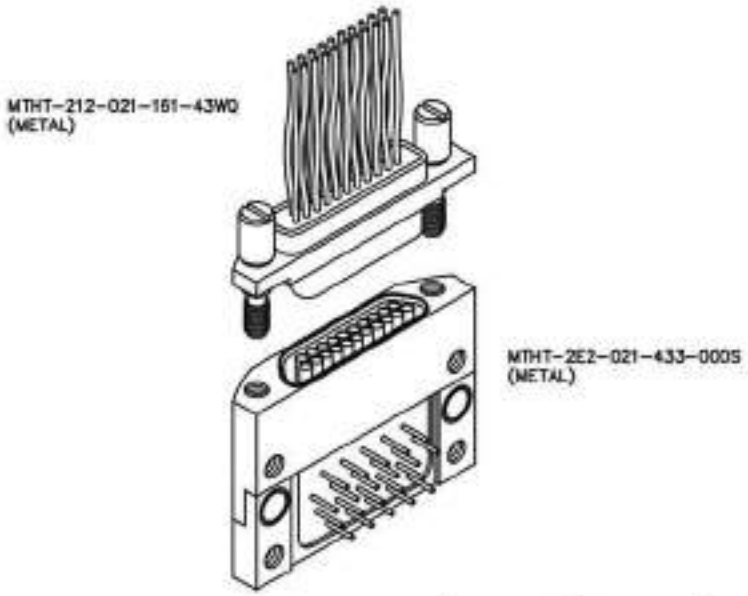

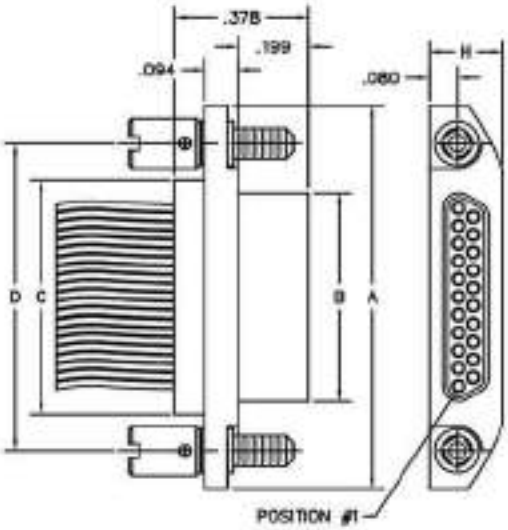

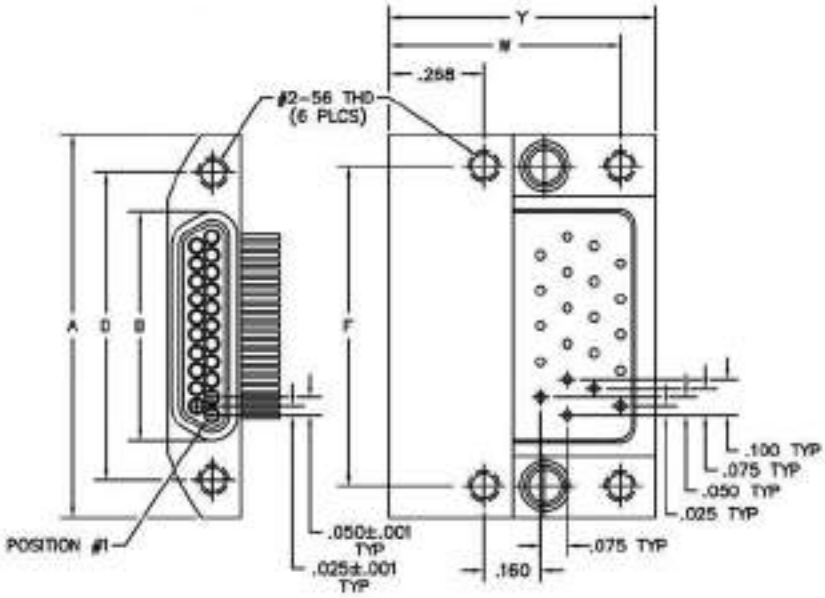

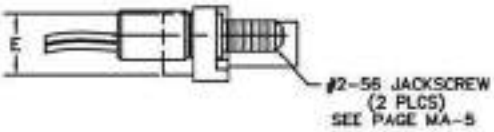

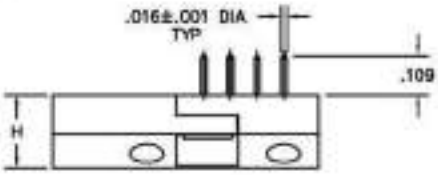

PLUG

RECEPTACLE

DIMENSIONS												
SIZE	CONTACT ROWS	A	B PLUG MAX	B RCPT MAX	C	D	E POTTING WELL MAX	F	H	HARDWARE	W	Y
9	2	.778	.292	.378	.398	.565	.173	.600	.208	#2-56 UNC THD (.092 DIA THRU)	.608	.690
15		.928	.442	.528	.548	.715		.750				
21		1.078	.592	.678	.698	.865		.900			.653	.750
25		1.178	.692	.778	.798	.965		1.000				
31		1.328	.842	.928	.948	1.115		1.150				
37		1.478	.992	1.078	1.098	1.265		1.300				
51	3	1.428	.942	1.028	1.048	1.215	.220	1.250	.250		.728	.825

AirBorn

PLUG:	MTHT– 212 – 021 – 161 – 43WQ
RECEPTACLE:	MTHT– 2E2 – 021 – 433 – 000S
	XXXX – XXX – XXX – XXX – XXXX

PLUG	RECEPTACLE
SERIES	
MTHT .050" Low Profile Metal I/O Connector (MTHT mates with MTHT receptacles)	MTHT .050" Low Profile Metal PC Board Mount Connector (MTHT mates with MTHT plugs)
BODY	
2 2-Row (Sizes 9 thru 37) 3 3-Row (Size 51)	2 2-Row (Sizes 9 thru 37) 3 3-Row (Size 51)
BODY STYLE: 1 Plug, straight, with ears. Low profile, radius. High temperature.	BODY STYLE: E Receptacle, right angle, with four mounting holes. Low profile, radius. High temperature.
BODY MATERIAL: 2 High temperature thermoplastic with electroless nickel shell	BODY MATERIAL: 2 High temperature thermoplastic with electroless nickel shell
SIZE	
XXX 009, 015, 021, 025, 031, 037, 051	XXX 009, 015, 021, 025, 031, 037, 051
CONTACTS	
TYPE CONTACTS/TERMINATIONS: 11 Pin, straight, solder cup 14 Pin, straight, .500" pigtails (.018 dia) 15 Pin, straight, 1.000" pigtails (.018 dia) 16 Pin, straight, crimped wire	TYPE CONTACTS/TERMINATIONS: 43 Socket, right angle, gold plated, .109" x .016" dia 44 Socket, right angle, gold plated, .140" x .016" dia 45 Socket, right angle, gold plated, .172" x .016" dia
PLATING OPTIONS: 1 50 µ" Au contacts (crimp wire) 3 50 µ" Au contacts: 10 µ" Au terminations (solder cup, pigtail)	PLATING OPTIONS: 3 50 µ" Au contacts: 10 µ" Au terminations
HARDWARE	
STYLE OF HARDWARE: 00 None 41 Two turning jackscrews, allen head 43 Two turning jackscrews, slot head	STYLE OF HARDWARE: 00 Integrated jacknuts
POLARIZATION / WIRING: 00 None XX For wiring codes, see page MA-3 & MA-4	POLARIZATION / WIRING 0S Standard body polarization

AirBorn

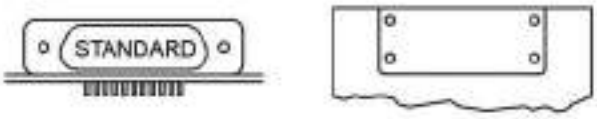

Recommended PC Board Layout

Low Profile, Right Angle
Standard Polarization

CONNECTOR MATING FACE (RECEPTACLE)

RECEPTACLE
PC BOARD LAYOUT
COMPONENT SIDE

9 POSITION

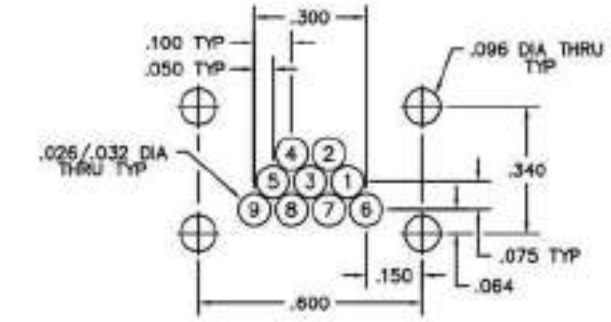

15 POSITION

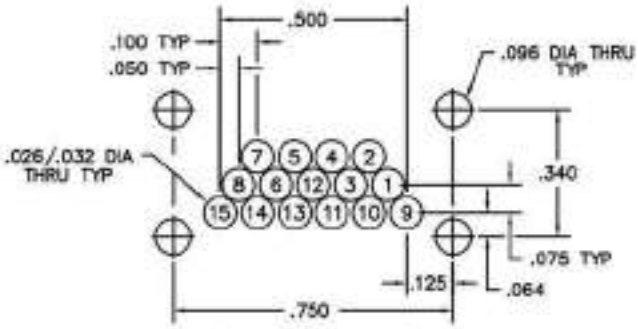

21 POSITION

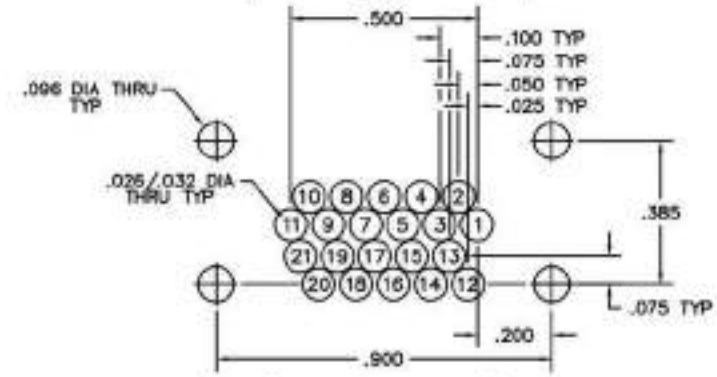

25 POSITION

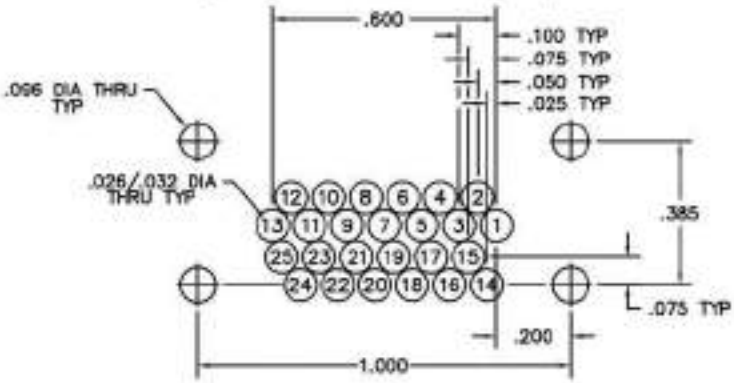

AirBorn

CONNECTOR MATING FACE

PC BOARD LAYOUT
COMPONENT SIDE

Recommended PC Board Layout

Low Profile, Right Angle
Standard Polarization

RECEPTACLE
PC BOARD LAYOUT
COMPONENT SIDE

CONNECTOR
MATING FACE
(RECEPTACLE)

31 POSITION

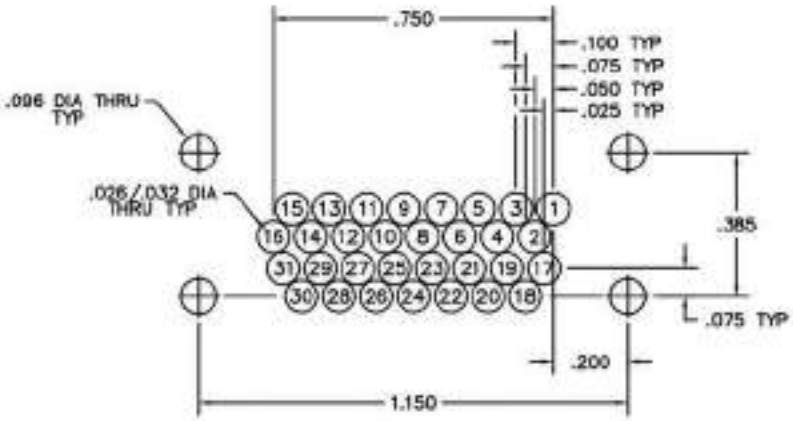

37 POSITION

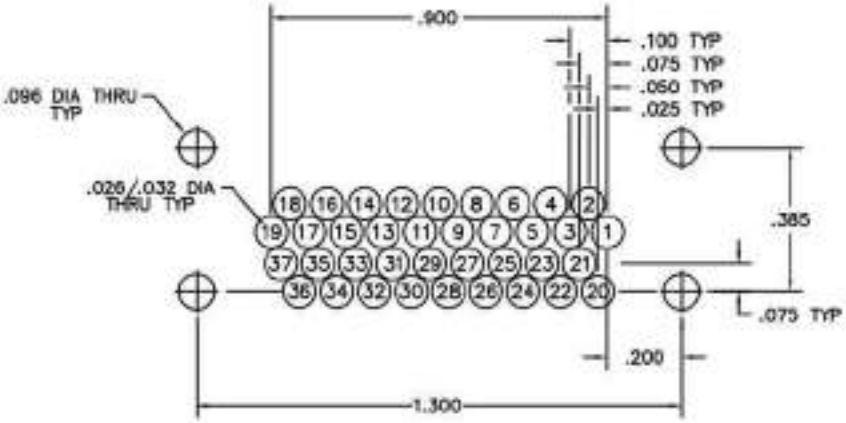

51 POSITION

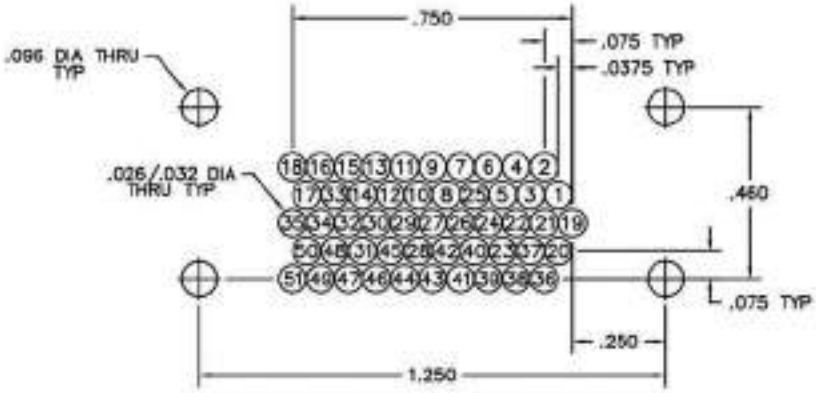

"M" SERIES ACCESSORIES

AirBorn

Contents

"M" Series
Hardware, Contacts and Accessories

	Wire Codes, Contacts and Hardware
MA-2	Contacts, contact positions and connector polarization
MA-3, MA-4	Wire codes (24 awg, 26 awg, 28 awg and twisted pairs)
MA-5	Hardware - MM, MN, MP, MQ, MMHT and MQHT
MA-6	Keying hardware
MA-7	Hardware - MM, MQ, EMI and Rear Panel Mount (MM and MK)
MA-8	Hardware - Miscellaneous
	Accessories
MA-11	Connector savers, rugged (metal - MQ and plastic - MN)
MA-13	Connector savers, low profile (metal - MQ and plastic - MN)
MA-15	EMI/RFI backshells, straight exit, rugged (metal - MM)
MA-17	EMI/RFI backshells, 45° exit, rugged (metal - MM)
MA-19	EMI/RFI backshells, 90° exit, rugged (metal - MM)
MA-21	EMI/RFI backshells, straight exit, low profile (metal - MQ)
MA-23	Dust covers, rugged (metal - MD)
MA-25	ESD dust covers, rugged and low profile (plastic - MD)
MA-26	O-rings and gaskets
MA-27	Rear Panel Mount Hardware
MA-28	Panel cut-outs, MM connectors with grounding fingers

AirBorn

Contacts

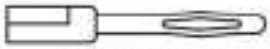

PIN CONTACT
WITH CRIMP BARREL

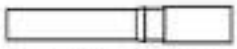

SOCKET CONTACT
WITH CRIMP BARREL

Contact Positions

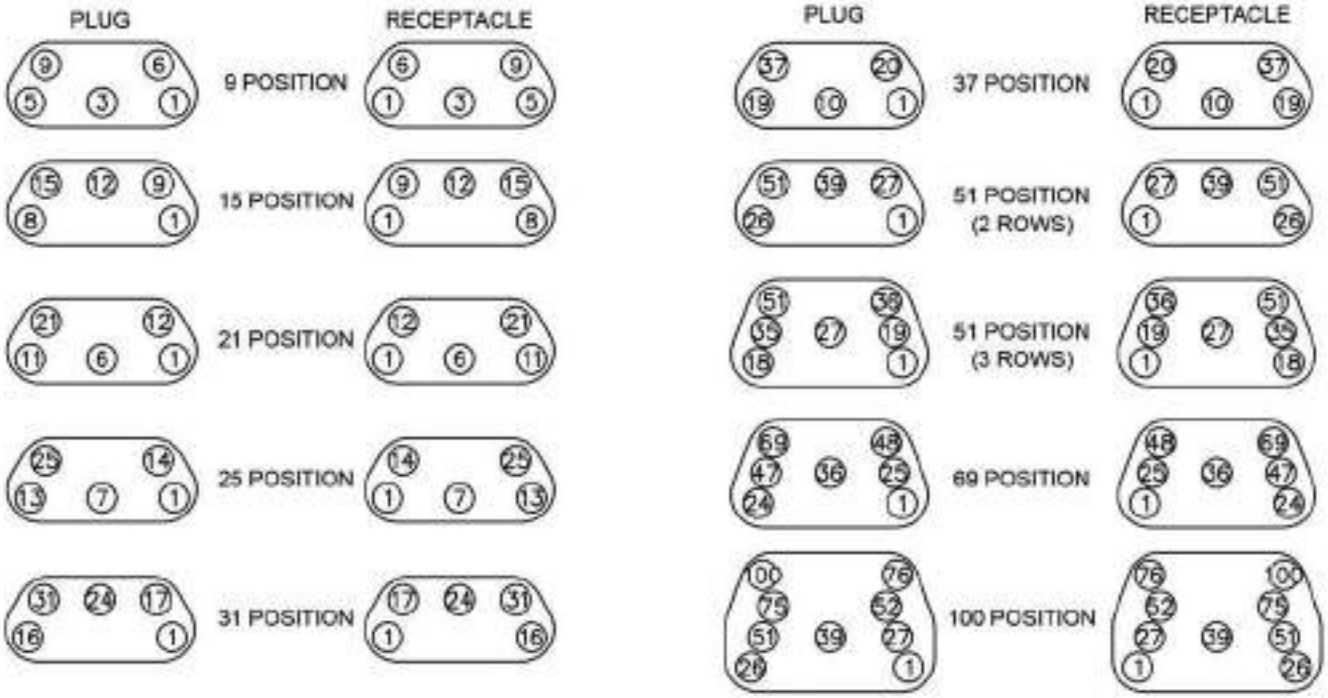

Hybrid Connectors

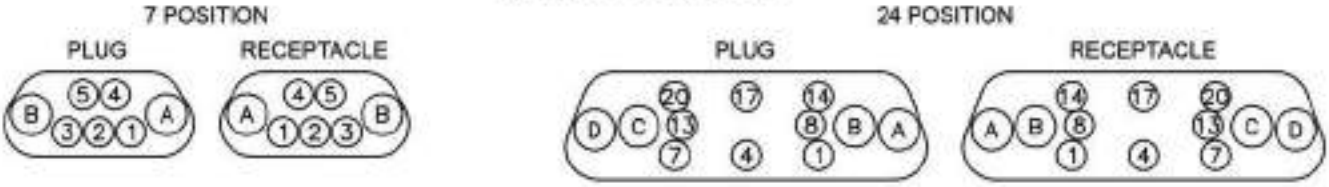

Note: Numbers indicate corner and centermost contacts. Views shown are mating face.

Connector Polarization

Note: Polarization option applies to PC board mounted, right angle connectors. (Series MK, ML, MR & MS)

Only standard polarization option applies to PC board mounted, right angle, high temperature connectors. (Series MKHT, MSHT & MTHT)

AirBorn

Wire Codes

NEMA HP3-EXBEB (Formerly M16878/4-24 TFE 7 strand)

	6"	12"	18"	24"	30"	36"	42"	48"	54"	60"	66"	72"	84"	96"	108"	120"
MIL-STD-681*	WA	WB	WC	UD	UE	WD	UG	UH	UJ	UK	UL	UM	UN	UP	UQ	UR
WHITE	WE	WF	WG	VD	VE	WH	VG	VH	VJ	VK	VL	VM	VN	VP	VQ	VR
YELLOW	WJ	WK	WL			WM										

NEMA HP3-EXBDB (Formerly M16878/4-26 TFE 7 strand)

	6"	12"	18"	24"	30"	36"	42"	48"	54"	60"	66"	72"	84"	96"	108"	120"
MIL-STD-681*	WN	WP	WQ	YD	YE	WR	YG	YH	YJ	YK	YL	YM	YN	YP	YQ	YR
WHITE	WS	WT	WU	ZD	ZE	WV	ZG	ZH	ZJ	ZK	ZL	ZM	ZN	ZP	ZQ	ZR
YELLOW	WW	WX	WY			WZ										

NEMA HP3-EXBCB (Formerly M16878/4-28 TFE 7 strand)

	6"	12"	18"	24"	30"	36"	42"	48"	54"	60"	66"	72"	84"	96"	108"	120"
MIL-STD-681*	XA	XB	XC	1D	1E	XD	1G	1H	1J	1K	1L	1M	1N	1P	1Q	1R
WHITE	XE	XF	XG	2D	2E	XH	2G	2H	2J	2K	2L	2M	2N	2P	2Q	2R
YELLOW	XJ	XK	XL			XM										

TWISTED PAIR per NEMA WC27500-XXRC2U00 (SAE AS22759/11)

	6"	12"	18"	24"	30"	36"	42"	48"	54"	60"	66"	72"	84"	96"	108"	120"
24 AWG	AA	AB	AC	AD	AE	AF	AG	AH	AJ	AK	AL	AM	AN	AP	AQ	AR
26 AWG	BA	BB	BC	BD	BE	BF	BG	BH	BJ	BK	BL	BM	BN	BP	BQ	BR

TWISTED PAIR per NEMA WC27500-XXSC2U00 (SAE AS22759/33)*** ⊠

	6"	12"	18"	24"	30"	36"	42"	48"	54"	60"	66"	72"	84"	96"	108"	120"
24 AWG	JA	JB	JC	JD	JE	JF	JG	JH	JJ	JK	JL	JM	JN	JP	JQ	JR
26 AWG	KA	KB	KC	KD	KE	KF	KG	KH	KJ	KK	KL	KM	KN	KP	KQ	KR

For twisted pair wire connect charts, see page MA-9
Twisted pair wire not available on MA, MC or Hybrid connectors

* = Connectors with more than 100 contacts will repeat color code after 100 colors.
*** = Per M83513, corrosion has been experienced on connectors that are pre-wired with 22759/33 and stored in sealed environments. Caution should be excercised when using this wire.
⊠ = Option not RoHS compliant

AirBorn

Wire Codes

SAE AS22759/11-24

	6"	12"	18"	24"	30"	36"	42"	48"	54"	60"	66"	72"	84"	96"	108"	120"
M83513**	5A	5B	5C	5D	5E	5F	5G	5H	5J	5K	5L	5M	5N	5P	5Q	5R
MIL-STD-681*	CA	CB	CC	CD	CE	CF	CG	CH	CJ	CK	CL	CM	CN	CP	CQ	CR
WHITE	DA	DB	DC	DD	DE	DF	DG	DH	DJ	DK	DL	DM	DN	DP	DQ	DR

SAE AS22759/11-26

	6"	12"	18"	24"	30"	36"	42"	48"	54"	60"	66"	72"	84"	96"	108"	120"
M83513**	6A	6B	V1	6D	6E	V2	6G	6H	6J	6K	6L	Y6	6N	6P	6Q	6R
MIL-STD-681*	X3	X4	W3	ED	EE	W4	EG	EH	EJ	EK	EL	EM	EN	EP	EQ	ER
WHITE	X1	X2	W1	FD	FE	W2	FG	FH	FJ	FK	FL	Y5	FN	FP	FQ	FR

SAE AS22759/33-24*** ⊠

	6"	12"	18"	24"	30"	36"	42"	48"	54"	60"	66"	72"	84"	96"	108"	120"
M83513**	LA	LB	LC	LD	LE	LF	LG	LH	LJ	LK	LL	LM	LN	LP	LQ	LR
WHITE	MA	MB	MC	MD	ME	MF	MG	MH	MJ	MK	ML	MM	MN	MP	MQ	MR

SAE AS22759/33-26*** ⊠

	6"	12"	18"	24"	30"	36"	42"	48"	54"	60"	66"	72"	84"	96"	108"	120"
M83513**	NA	NB	Y3	ND	NE	Y4	NG	NH	NJ	NK	NL	Y8	NN	NP	NQ	NR
WHITE	PA	PB	Y1	PD	PE	Y2	PG	PH	PJ	PK	PL	Y7	PN	PP	PQ	PR

* = Connectors with more than 100 contacts will repeat color code after 100 colors.
** = Wire colors per M83513 are ten solid colors repeating.
*** = Per M83513, corrosion has been experienced on connectors that are pre-wired with 22759/33 and stored in sealed environments. Caution should be excercised when using this wire.
⊠ = Option not RoHS compliant

AirBorn

Hardware

MM - MN - MQ - MP - MMHT - MQHT
Jacking Hardware

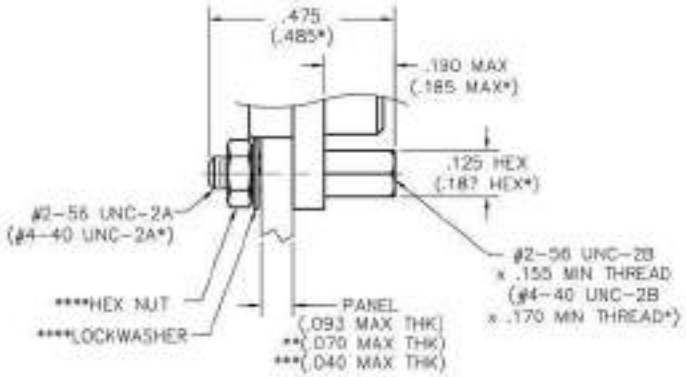

JACKPOST ASSEMBLY

#2-56 JACKPOST	00-000-000-000-2200
#4-40 JACKPOST	00-000-000-000-6200
FOR RECEPTACLES WITH GROUNDING FINGERS	
#2-56 JACKPOST	00-000-000-000-2200-0G7
#4-40 JACKPOST	00-000-000-000-6200-0G7

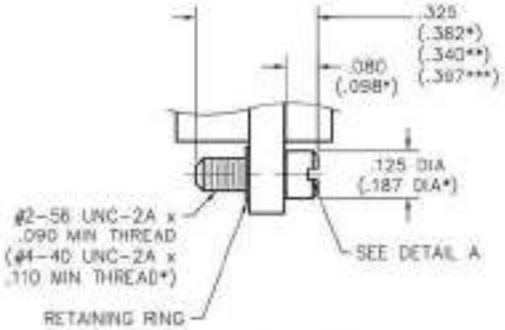

SHORT TURNING
JACKSCREW ASSEMBLY

#2-56 JACKSCREW, ALLEN HEAD	00-000-000-000-4100
#2-56 JACKSCREW, SLOT HEAD	00-000-000-000-4300
#4-40 JACKSCREW, ALLEN HEAD	00-000-000-000-8100
#4-40 JACKSCREW, SLOT HEAD	00-000-000-000-8300
FOR RECEPTACLES WITH GROUNDING FINGERS	
#2-56 JACKSCREW, ALLEN HEAD	00-000-000-000-4100-0G7
#2-56 JACKSCREW, SLOT HEAD	00-000-000-000-4300-0G7
#4-40 JACKSCREW, ALLEN HEAD	00-000-000-000-8100-0G7
#4-40 JACKSCREW, SLOT HEAD	00-000-000-000-8300-0G7

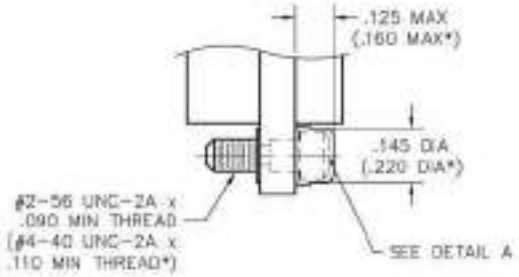

SHORT CAPTIVE
JACKSCREW ASSEMBLY

JACKSCREW, ALLEN HEAD
FACTORY INSTALLED ONLY

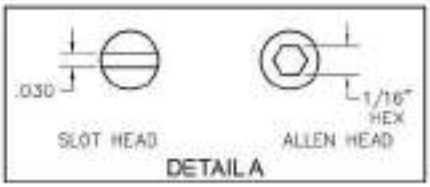

DETAIL A

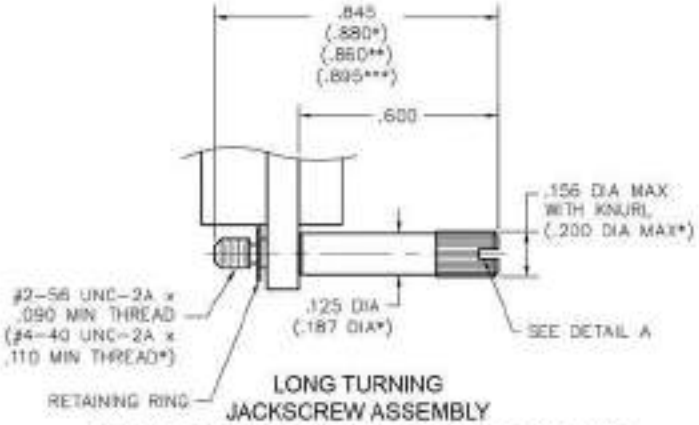

LONG TURNING
JACKSCREW ASSEMBLY

#2-56 JACKSCREW, ALLEN HEAD	00-000-000-000-4200
#2-56 JACKSCREW, SLOT HEAD	00-000-000-000-4400
#4-40 JACKSCREW, ALLEN HEAD	00-000-000-000-8200
#4-40 JACKSCREW, SLOT HEAD	00-000-000-000-8400
FOR RECEPTACLES WITH GROUNDING FINGERS	
#2-56 JACKSCREW, ALLEN HEAD	00-000-000-000-4200-0G7
#2-56 JACKSCREW, SLOT HEAD	00-000-000-000-4400-0G7
#4-40 JACKSCREW, ALLEN HEAD	00-000-000-000-8200-0G7
#4-40 JACKSCREW, SLOT HEAD	00-000-000-000-8400-0G7

* = Dimensions for 100 position connectors
** = Applies to #2-56 hardware for receptacles with grounding fingers
*** = Applies to #4-40 hardware for receptacles with grounding fingers
**** = Hardware for Receptacles with Grounding Fingers will come with a flat washers, lockwashers, and spanner nuts

Polarized Keying Hardware

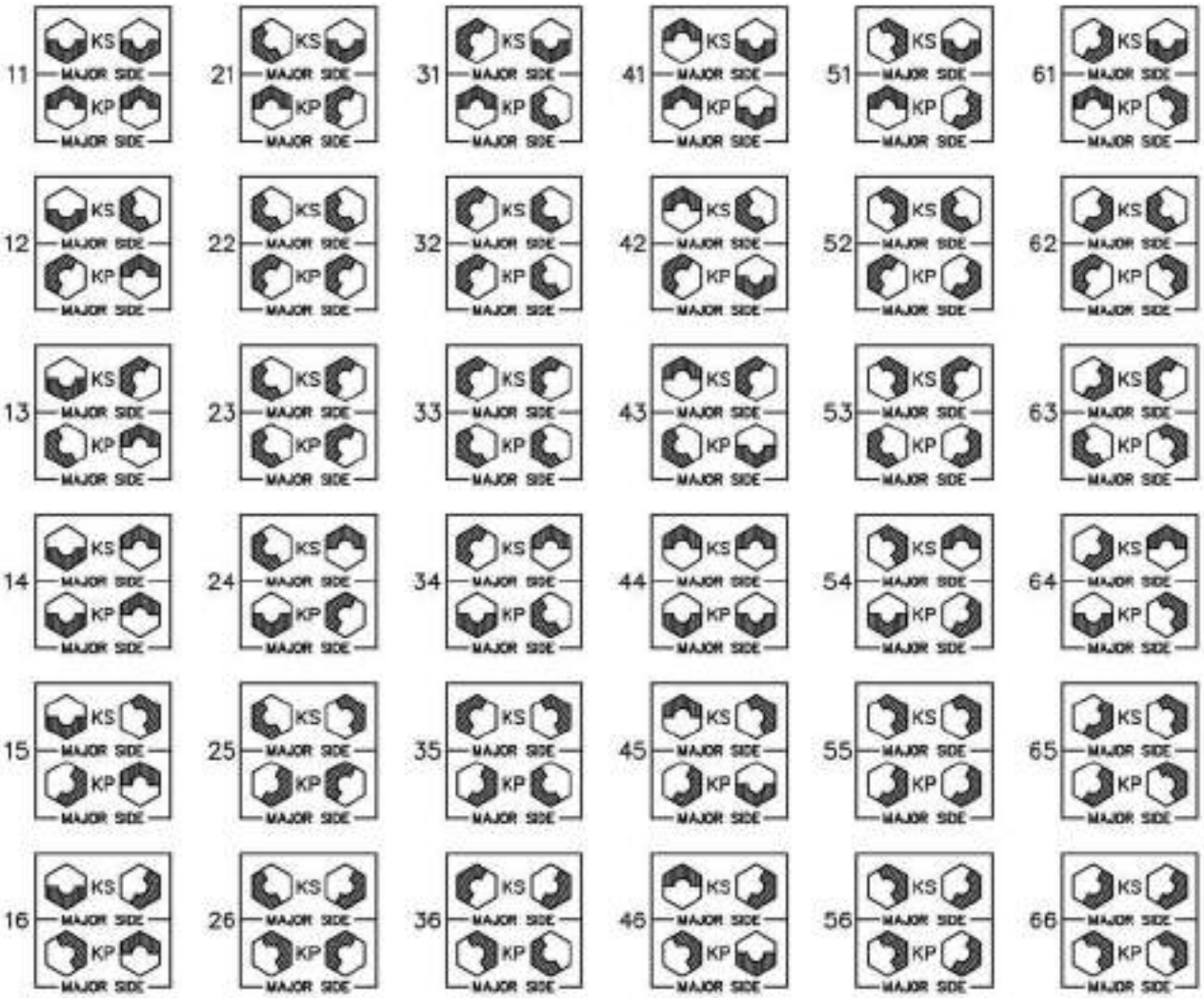

Select the appropriate two digit number above and include as the last two digits of the hardware code in the part number. (Keying hardware is factory installed and non-removable).

Example:
MM-213-025-161-99WA-KS11
MK-263-025-435-990S-KP11

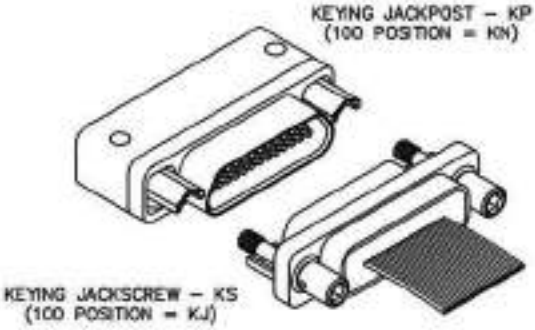

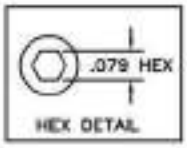

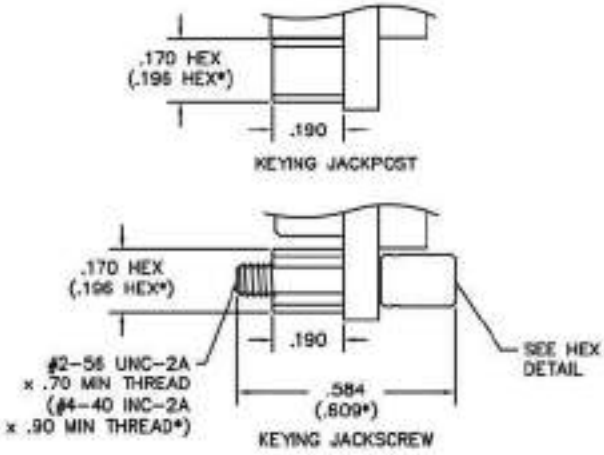

* = Dimensions for 100 position connectors

AirBorn

Hardware

MM - MQ
I/O with EMI/RFI Backshell

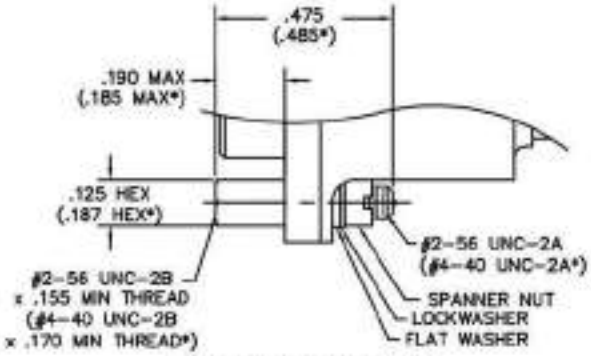

JACKPOST ASSEMBLY

#2-56 JACKPOST	00-000-000-000-2200-01G
#4-40 JACKPOST	00-000-000-000-6200-04A

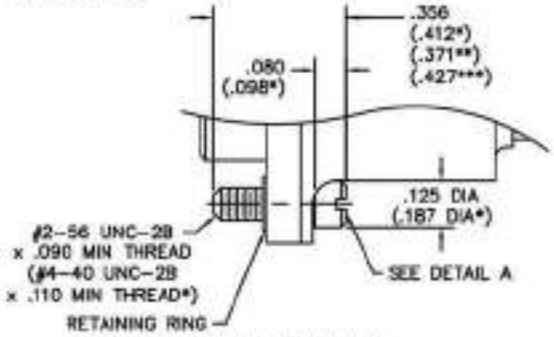

SHORT TURNING
JACKSCREW ASSEMBLY

#2-56 JACKSCREW, ALLEN HEAD	00-000-000-000-4100-01G
#2-56 JACKSCREW, SLOT HEAD	00-000-000-000-4300-01G
#4-40 JACKSCREW, ALLEN HEAD	00-000-000-000-8100-04A
#4-40 JACKSCREW, SLOT HEAD	00-000-000-000-8300-04A

FOR RECEPTACLES WITH GROUNDING FINGERS

#2-56 JACKSCREW, ALLEN HEAD	00-000-000-000-4100-0FZ
#2-56 JACKSCREW, SLOT HEAD	00-000-000-000-4300-0FZ
#4-40 JACKSCREW, ALLEN HEAD	00-000-000-000-8100-0FZ
#4-40 JACKSCREW, SLOT HEAD	00-000-000-000-8300-0FZ

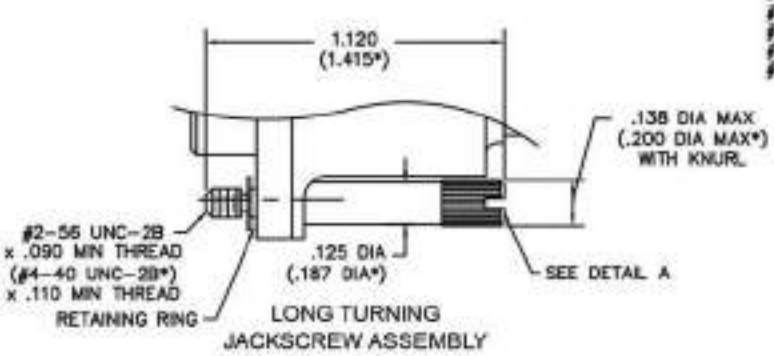

LONG TURNING
JACKSCREW ASSEMBLY

#2-56 JACKSCREW, SLOT HEAD	00-000-000-000-4400-01G
#4-40 JACKSCREW, SLOT HEAD	00-000-000-000-8400-04A

FOR RECEPTACLES WITH GROUNDING FINGERS

#2-56 JACKSCREW, SLOT HEAD	00-000-000-000-4400-0FZ
#4-40 JACKSCREW, SLOT HEAD	00-000-000-000-8400-0FZ

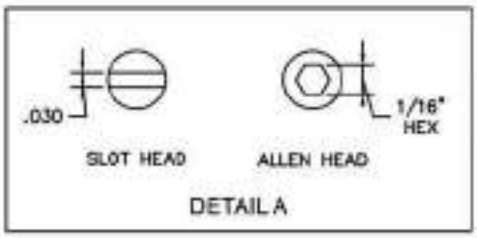

* = Dimensions for #4-40 hardware (100 position connectors)
** = Applies to #2-56 hardware for receptacles with grounding fingers
*** = Applies to #4-40 hardware for receptacles with grounding fingers

---

MM - MK
Rear Panel Mount Jackposts
for Body Styles "A", "C", "E", "H", "K", and "L"

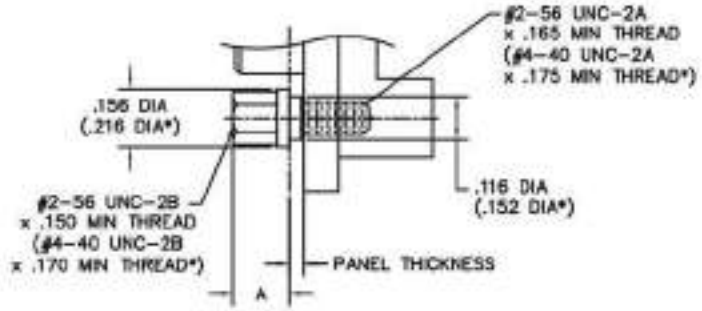

PANEL THK	THREAD SIZE	PART NUMBER	A MAX
.040	#2-56	MM-000-000-000-2400-001	.150
.060		MM-000-000-000-2600-003	.130
.070		MM-000-000-000-2800-005	.120
.080		MM-000-000-000-2900-007	.110
.040	#4-40	MM-000-000-000-6400-002	.150
.060		MM-000-000-000-6600-004	.130
.070		MM-000-000-000-6800-006	.120
.080		MM-000-000-000-6900-008	.110

* = Dimensions for 100 position connectors

AirBorn

Hardware

MK
Vertical SMT

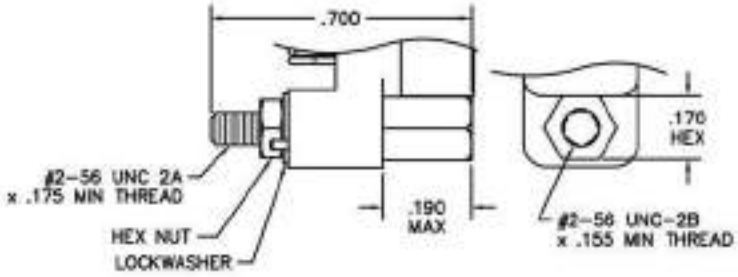

JACKPOST ASSEMBLY
FACTORY INSTALLED ONLY

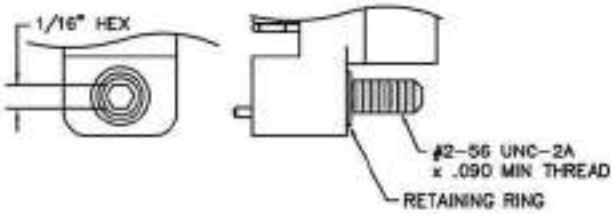

TURNING JACKSCREW ASSEMBLY
FACTORY INSTALLED ONLY

MK - MS
MKHT - MSHT

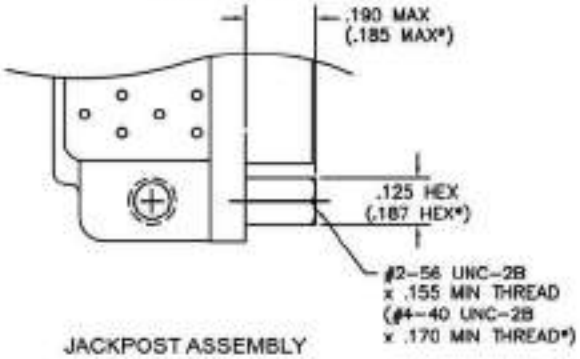

JACKPOST ASSEMBLY
CONSULT FACTORY

* = Dimensions for 100 position connectors

MTHT

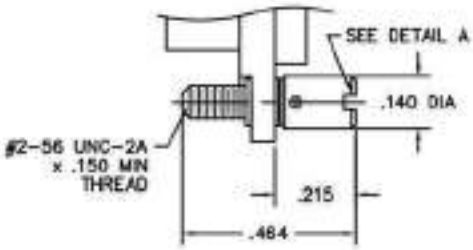

JACKSCREW ASSEMBLY
FACTORY INSTALLED ONLY

MA

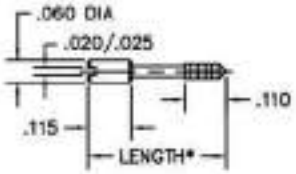

1 MM LOCKSCREW
FOR MA STRIP CONNECTORS

* .370 LONG CDG10492
* .465 LONG CDG10493

Mounting Bracket

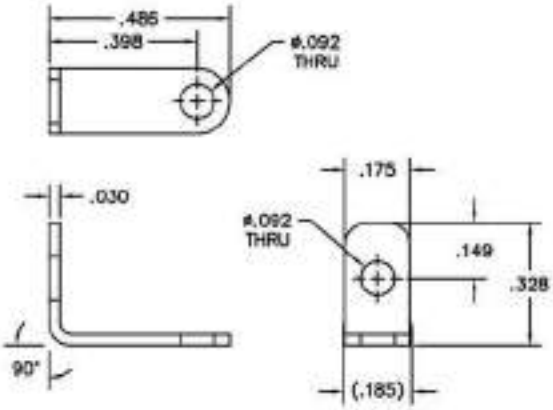

CDG12633 – 2 EACH

AirBorn

Twisted Pair Wire Connect Charts

9 POSITION

1	WHT
6	WHT/BLU
2	WHT
7	WHT/BLU
3	WHT
8	WHT/BLU
4	WHT
9	WHT/BLU
5	WHT

21 POSITION

1	WHT
12	WHT/BLU
2	WHT
13	WHT/BLU
3	WHT
14	WHT/BLU
4	WHT
15	WHT/BLU
5	WHT
16	WHT/BLU
6	WHT
17	WHT/BLU
7	WHT
18	WHT/BLU
8	WHT
19	WHT/BLU
9	WHT
20	WHT/BLU
10	WHT
21	WHT/BLU
11	WHT

37 POSITION

1	WHT
20	WHT/BLU
2	WHT
21	WHT/BLU
3	WHT
22	WHT/BLU
4	WHT
23	WHT/BLU
5	WHT
24	WHT/BLU
6	WHT
25	WHT/BLU
7	WHT
26	WHT/BLU
8	WHT
27	WHT/BLU
9	WHT
28	WHT/BLU
10	WHT
29	WHT/BLU
11	WHT
30	WHT/BLU
12	WHT
31	WHT/BLU
13	WHT
32	WHT/BLU
14	WHT
33	WHT/BLU
15	WHT
34	WHT/BLU
16	WHT
35	WHT/BLU
17	WHT
36	WHT/BLU
18	WHT
37	WHT/BLU
19	WHT

15 POSITION

1	WHT
9	WHT/BLU
2	WHT
10	WHT/BLU
3	WHT
11	WHT/BLU
4	WHT
12	WHT/BLU
5	WHT
13	WHT/BLU
6	WHT
14	WHT/BLU
7	WHT
15	WHT/BLU
8	WHT

25 POSITION

1	WHT
14	WHT/BLU
2	WHT
15	WHT/BLU
3	WHT
16	WHT/BLU
4	WHT
17	WHT/BLU
5	WHT
18	WHT/BLU
6	WHT
19	WHT/BLU
7	WHT
20	WHT/BLU
8	WHT
21	WHT/BLU
9	WHT
22	WHT/BLU
10	WHT
23	WHT/BLU
11	WHT
24	WHT/BLU
12	WHT
25	WHT/BLU
13	WHT

31 POSITION

1	WHT
17	WHT/BLU
2	WHT
18	WHT/BLU
3	WHT
19	WHT/BLU
4	WHT
20	WHT/BLU
5	WHT
21	WHT/BLU
6	WHT
22	WHT/BLU
7	WHT
23	WHT/BLU
8	WHT
24	WHT/BLU
9	WHT
25	WHT/BLU
10	WHT
26	WHT/BLU
11	WHT
27	WHT/BLU
12	WHT
28	WHT/BLU
13	WHT
29	WHT/BLU
14	WHT
30	WHT/BLU
15	WHT
31	WHT/BLU
16	WHT

51 POSITION 2 rows

1	WHT
27	WHT/BLU
2	WHT
28	WHT/BLU
3	WHT
29	WHT/BLU
4	WHT
30	WHT/BLU
5	WHT
31	WHT/BLU
6	WHT
32	WHT/BLU
7	WHT
33	WHT/BLU
8	WHT
34	WHT/BLU
9	WHT
35	WHT/BLU
10	WHT
36	WHT/BLU
11	WHT
37	WHT/BLU
12	WHT
38	WHT/BLU
13	WHT
39	WHT/BLU
14	WHT
40	WHT/BLU
15	WHT
41	WHT/BLU
16	WHT
42	WHT/BLU
17	WHT
43	WHT/BLU
18	WHT
44	WHT/BLU
19	WHT
45	WHT/BLU
20	WHT
46	WHT/BLU
21	WHT
47	WHT/BLU
22	WHT
48	WHT/BLU
23	WHT
49	WHT/BLU
24	WHT
50	WHT/BLU
25	WHT
51	WHT/BLU
26	WHT

51 POSITION 3 rows

1	WHT
19	WHT/BLU
2	WHT
20	WHT/BLU
3	WHT
21	WHT/BLU
4	WHT
22	WHT/BLU
5	WHT
23	WHT/BLU
6	WHT
24	WHT/BLU
7	WHT
25	WHT/BLU
8	WHT
26	WHT/BLU
9	WHT
27	WHT/BLU
10	WHT
28	WHT/BLU
11	WHT
29	WHT/BLU
12	WHT
30	WHT/BLU
13	WHT
31	WHT/BLU
14	WHT
32	WHT/BLU
15	WHT
33	WHT/BLU
16	WHT
34	WHT/BLU
17	WHT
35	WHT/BLU
36	WHT
37	WHT/BLU
38	WHT
39	WHT/BLU
40	WHT
41	WHT/BLU
42	WHT
43	WHT/BLU
44	WHT
45	WHT/BLU
46	WHT
47	WHT/BLU
48	WHT
49	WHT/BLU
50	WHT
51	WHT/BLU
18	WHT

69 POSITION

1	WHT
25	WHT/BLU
2	WHT
26	WHT/BLU
3	WHT
27	WHT/BLU
4	WHT
28	WHT/BLU
5	WHT
29	WHT/BLU
6	WHT
30	WHT/BLU
7	WHT
31	WHT/BLU
8	WHT
32	WHT/BLU
9	WHT
33	WHT/BLU
10	WHT
34	WHT/BLU
11	WHT
35	WHT/BLU
12	WHT
36	WHT/BLU
13	WHT
37	WHT/BLU
14	WHT
38	WHT/BLU
15	WHT
39	WHT/BLU
16	WHT
40	WHT/BLU
17	WHT
41	WHT/BLU
18	WHT
42	WHT/BLU
19	WHT
43	WHT/BLU
20	WHT
44	WHT/BLU
21	WHT
45	WHT/BLU
22	WHT
46	WHT/BLU
23	WHT
47	WHT/BLU
48	WHT
49	WHT/BLU
50	WHT
51	WHT/BLU
52	WHT
53	WHT/BLU
54	WHT
55	WHT/BLU
56	WHT
57	WHT/BLU
58	WHT
59	WHT/BLU
60	WHT
61	WHT/BLU
62	WHT
63	WHT/BLU
64	WHT
65	WHT/BLU
66	WHT
67	WHT/BLU
68	WHT
69	WHT/BLU
24	WHT

100 POSITION

1	WHT
27	WHT/BLU
2	WHT
28	WHT/BLU
3	WHT
29	WHT/BLU
4	WHT
30	WHT/BLU
5	WHT
31	WHT/BLU
6	WHT
32	WHT/BLU
7	WHT
33	WHT/BLU
8	WHT
34	WHT/BLU
9	WHT
35	WHT/BLU
10	WHT
36	WHT/BLU
11	WHT
37	WHT/BLU
12	WHT
38	WHT/BLU
13	WHT
39	WHT/BLU
14	WHT
40	WHT/BLU
15	WHT
41	WHT/BLU
16	WHT
42	WHT/BLU
17	WHT
43	WHT/BLU
18	WHT
44	WHT/BLU
19	WHT
45	WHT/BLU
20	WHT
46	WHT/BLU
21	WHT
47	WHT/BLU
22	WHT
48	WHT/BLU
23	WHT
49	WHT/BLU
24	WHT
50	WHT/BLU
25	WHT
51	WHT/BLU
26	WHT
100	WHT/BLU
52	WHT
76	WHT/BLU
53	WHT
77	WHT/BLU
54	WHT
78	WHT/BLU
55	WHT
79	WHT/BLU
56	WHT
80	WHT/BLU
57	WHT
81	WHT/BLU
58	WHT
82	WHT/BLU
59	WHT
83	WHT/BLU
60	WHT
84	WHT/BLU
61	WHT
85	WHT/BLU
62	WHT
86	WHT/BLU
63	WHT
87	WHT/BLU
64	WHT
88	WHT/BLU
65	WHT
89	WHT/BLU
66	WHT
90	WHT/BLU
67	WHT
91	WHT/BLU
68	WHT
92	WHT/BLU
69	WHT
93	WHT/BLU
70	WHT
94	WHT/BLU
71	WHT
95	WHT/BLU
72	WHT
96	WHT/BLU
73	WHT
97	WHT/BLU
74	WHT
98	WHT/BLU
75	WHT
99	WHT/BLU

Panel Mounting Dimensions

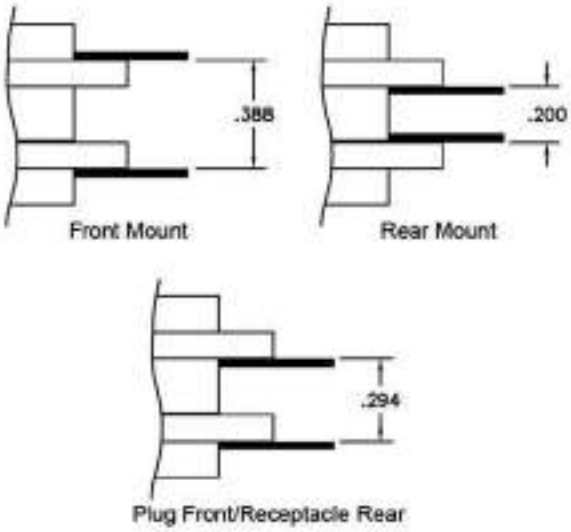

MOUNTING DIMENSIONS

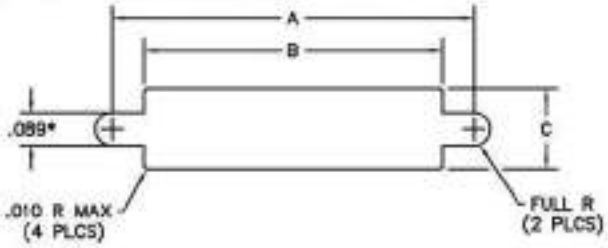

* = .118 FOR 100 POSITION CONNECTOR

DIMENSIONS					
CONTACT ROWS	SIZE	A +.004 −.000	B +.005 −.000	C +.004 −.000 MP,MQ,MR,MS MQHT, MSHT	C +.004 −.000 MK,ML,MN,MK MKHT, MMHT
2	9	.570	.400	.215	.273
	15	.720	.550		
	21	.870	.700		
	25	.970	.800		
	31	1.120	.950		
	37	1.270	1.100		
	51	1.620	1.450		
3	51	1.220	1.050	.256	.311
	69	1.520	1.350		
4	100	1.805	1.435	—	.383

Panel Mounting Dimensions for Rear Panel Mount Connectors

RUGGED METAL
MM, MN, MK, ML
SIZES: 9 - 69

DIMENSIONS			
SIZE	A +.004 −.000	B +.005 −.000	C ±.005
9	.401	.252	.565
15	.551		.715
21	.701		.865
25	.801		.965
31	.951		1.115
37	1.101		1.265
51	1.451		1.615
51	1.051	.295	1.215
69	1.351		1.515

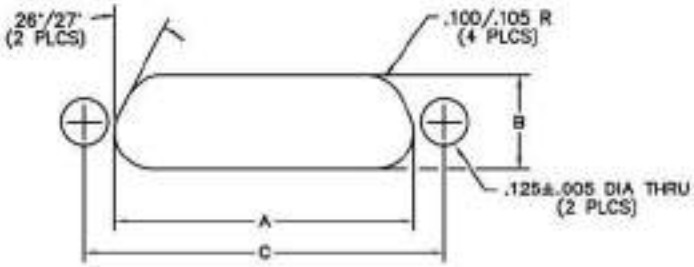

LOW PROFILE
MQ, MP, MS, MR
SIZES: 9 - 51

DIMENSIONS			
SIZE	A +.004 −.000	B +.005 −.000	C ±.005
9	.379	.219	.565
15	.529		.715
21	.679		.865
25	.779		.965
31	.929		1.115
37	1.079		1.265
51	1.029	.261	1.215

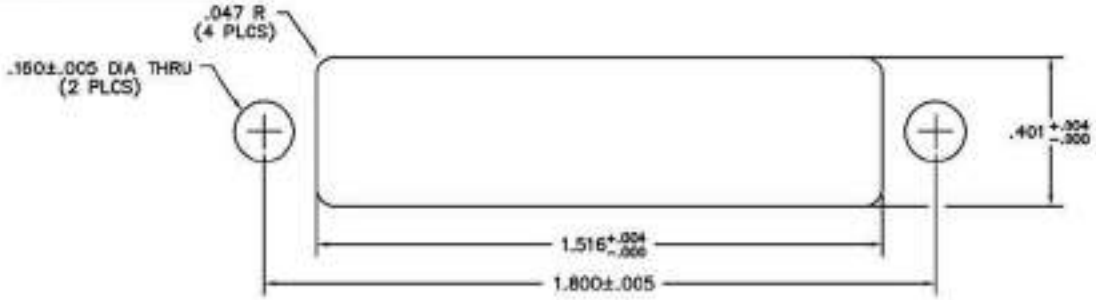

RUGGED METAL
MM, MN, MK, ML
SIZE 100

AirBorn

Connector Saver

.050"

9 thru 100 Contacts

Rugged Metal

MM

Rugged Plastic

MN

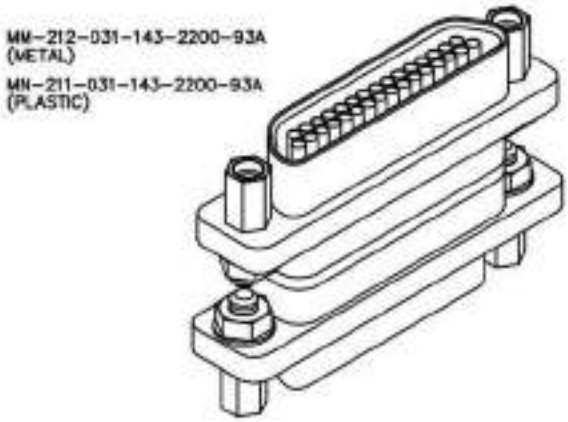

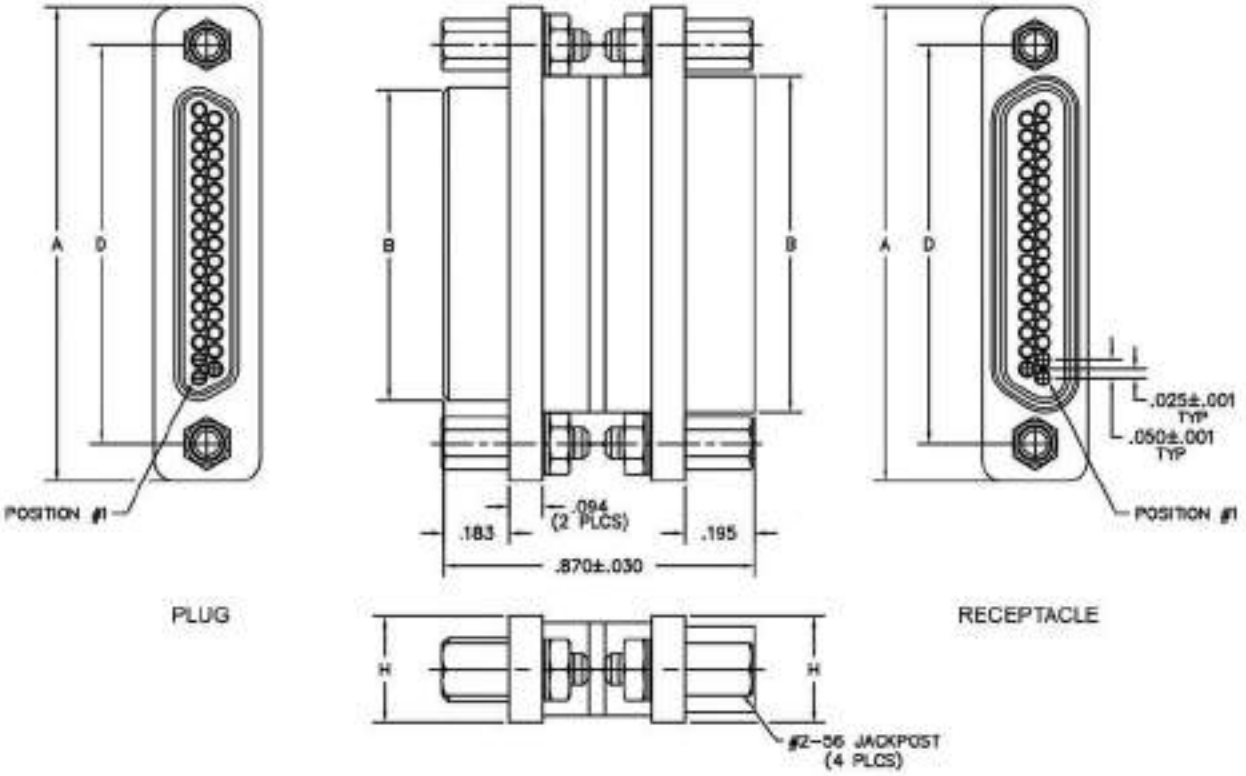

PLUG

RECEPTACLE

DIMENSIONS							
SIZE	CONTACT ROWS	A	B PLUG MAX	B RCPT MAX	D	H	HARDWARE
9	2	.775	.334	.400	.565	.298	#2-56 UNC THD (.092 DIA THRU)
15		.925	.484	.550	.715		
21		1.075	.634	.700	.865		
25		1.175	.734	.800	.965		
31		1.325	.884	.950	1.115		
37		1.475	1.034	1.100	1.265		
51**		1.825	1.384	1.450	1.615		
51	3	1.425	.984	1.050	1.215	.341	
69***		1.725	1.284	1.350	1.515		
100	4	2.160	1.384	1.508	1.800	.384	#4-40 UNC THD (.147 DIA THRU)

** = 2 ROW, 51 POSITION CONNECTORS ARE AVAILABLE IN METAL ONLY (NON MIL-SPEC INTERFACE)
*** = 69 POSITION CONNECTORS ARE AVAILABLE IN METAL ONLY.

AirBorn

PLUG/RECEPTACLE: MM–212–031–143–2200–93A
MN–211–031–143–2200–93A
XX–XXX–XXX–XXX–XXXX–XXX

SERIES

MM .050" Rugged Metal
MN .050" Rugged Plastic

BODY

2 2-Row (Sizes 9 thru 51**)
3 3-Row (Size 51 & 69***)
4 4-Row (Size 100)

BODY STYLE:
1 Plug/Receptacle, straight with mounting ears, receptacle includes interfacial sealing gasket

BODY MATERIAL:
1 Polyphenylene Sulfide (MN only)
2 Polyphenylene Sulfide with electroless nickel shell
3 Polyphenylene Sulfide with electrodeposited cadmium shell ☒
4 Polyphenylene Sulfide with hard anodized black shell

SIZE

XXX 009, 015, 021, 025, 031, 037, 051**, 069***, 100

CONTACTS

TYPE CONTACTS/TERMINATIONS:
14 Pin/Socket, straight

PLATING OPTIONS:
3 50 µ" Au contacts: 10 µ" Au terminations

HARDWARE

STYLE OF HARDWARE:
00 None
22 Two fixed jacknut assemblies (62*)
JA Turning jackpost with retaining ring, uninstalled (PA*)
JP Turning jackpost, internal thread on plug side (PP*)
JS Turning jackpost, internal thread on receptacle side (PS*)

POLARIZATION / WIRING:
00 None

SPECIAL DESIGNATORS

93A Connector saver designator

* = Use number in parenthesis when ordering size 100.
** = 2 row, 51 position connectors are available in metal only (non mil-spec interface)
*** = 69 position connectors are available in metal only.

☒ = Option not RoHS compliant

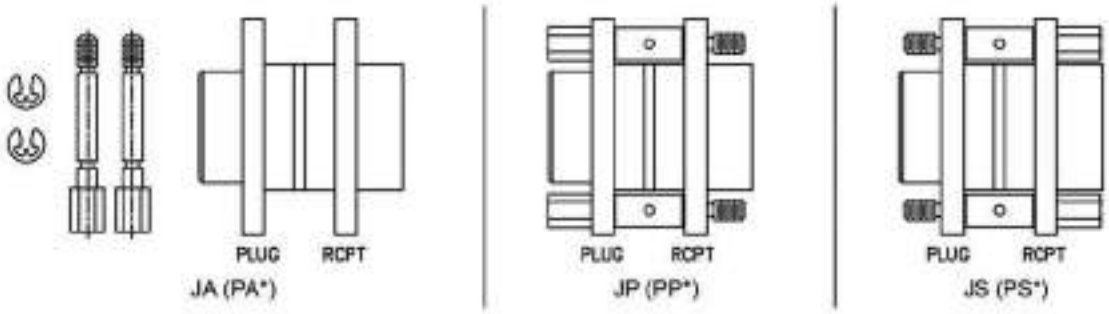

AirBorn

Connector Saver

.050"

9 thru 51 Contacts

Low Profile Metal

MQ

Low Profile Plastic

MP

MQ-212-031-143-2200-93A
(METAL)

MP-211-031-143-2200-93A
(PLASTIC)

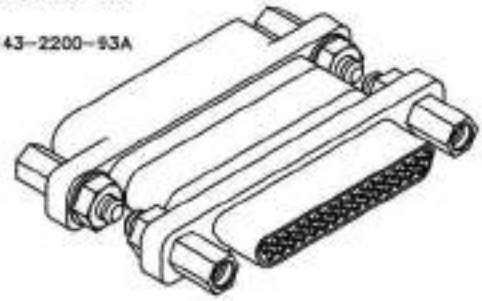

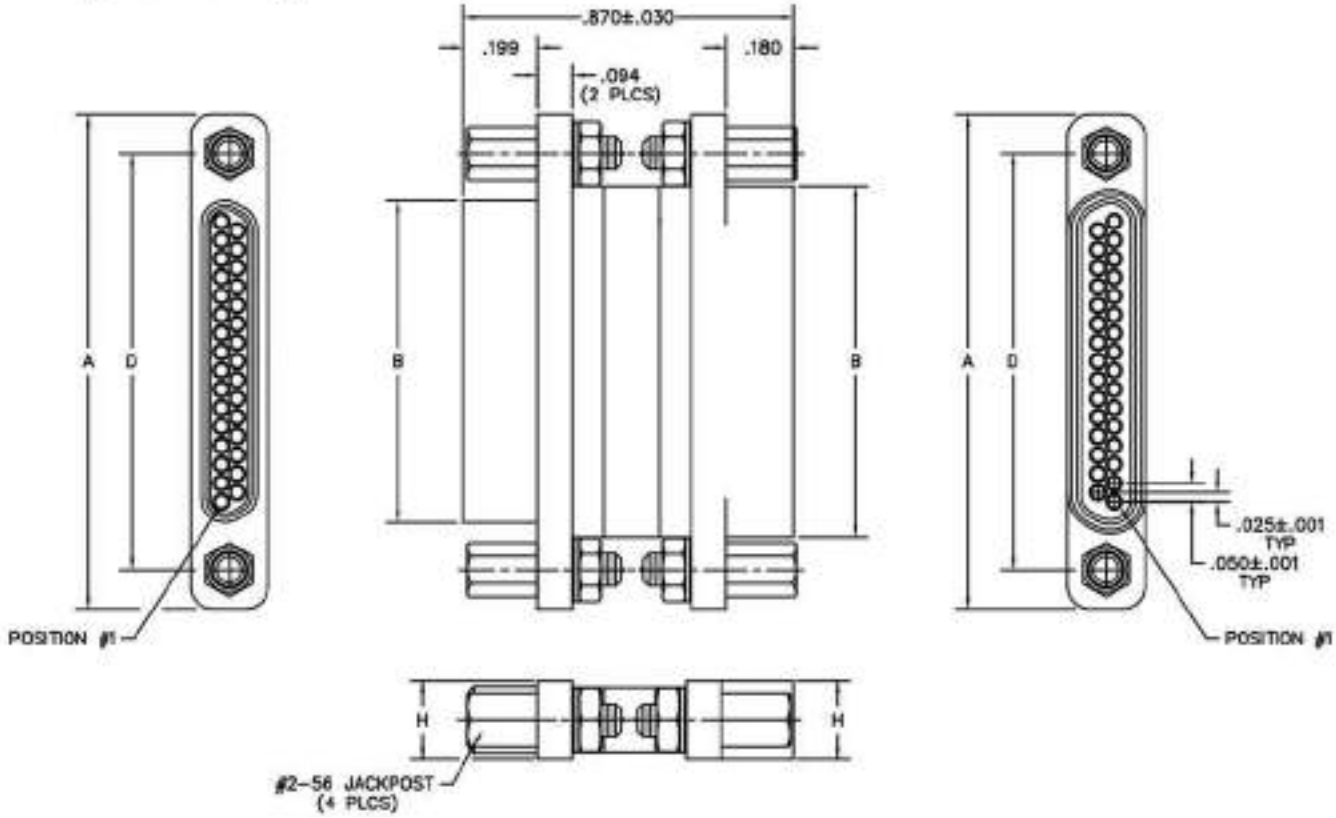

PLUG

RECEPTACLE

DIMENSIONS							
SIZE	CONTACT ROWS	A	B PLUG MAX	B RCPT MAX	D	H ±.005	HARDWARE
9	2	.778	.292	.378	.565	.208	#2-56 UNC THD (.092 DIA THRU)
15		.928	.442	.528	.715		
21		1.078	.592	.678	.865		
25		1.178	.692	.778	.965		
31		1.328	.842	.928	1.115		
37		1.478	.992	1.078	1.265		
51	3	1.428	.942	1.028	1.215	.250	

PLUG/RECEPTACLE: MQ–212–031–143–2200–93A
MP–211–031–143–2200–93A
XX–XXX–XXX–XXX–XXXX–XXX

SERIES

MQ .050" Low Profile Metal
MP .050" Low Profile Plastic

BODY

2 2-Row (Sizes 9 thru 37)
3 3-Row (Size 51)

BODY STYLE:
1 Plug/Receptacle, straight with mounting ears

BODY MATERIAL:
1 Polyphenylene Sulfide (MN only)
2 Polyphenylene Sulfide with electroless nickel shell
3 Polyphenylene Sulfide with electrodeposited cadmium shell ☒
4 Polyphenylene Sulfide with hard anodized back shell

SIZE

XXX 009, 015, 021, 025, 031, 037, 051

CONTACTS

TYPE CONTACTS/TERMINATIONS:
14 Pin/Socket, straight

PLATING OPTIONS:
3 50 µ" Au contacts: 10 µ" Au terminations

HARDWARE

STYLE OF HARDWARE:
00 None
22 Two fixed jacknut assemblies
JA Turning jackpost with retaining ring, uninstalled
JP Turning jackpost, internal thread on plug side
JS Turning jackpost, internal thread on receptacle side

POLARIZATION / WIRING:
00 None

SPECIAL DESIGNATORS

93A Connector saver designator

☒ = Option not RoHS compliant

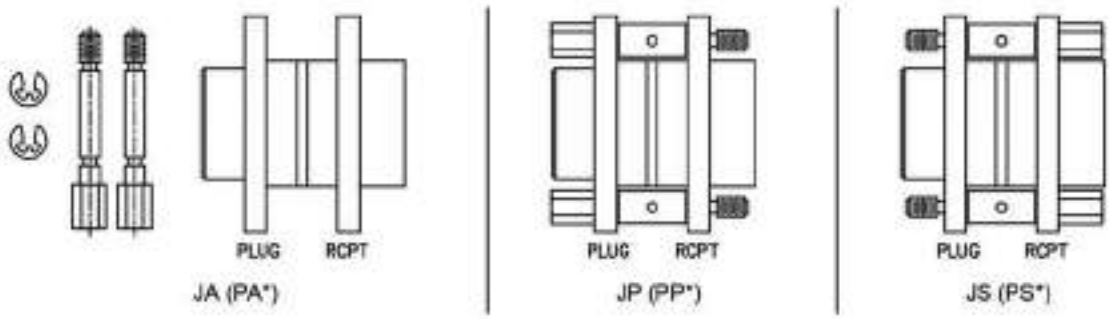

AirBorn

EMI/RFI Straight Backshells

.050"

9 thru 100 Contacts

Rugged Metal

MM

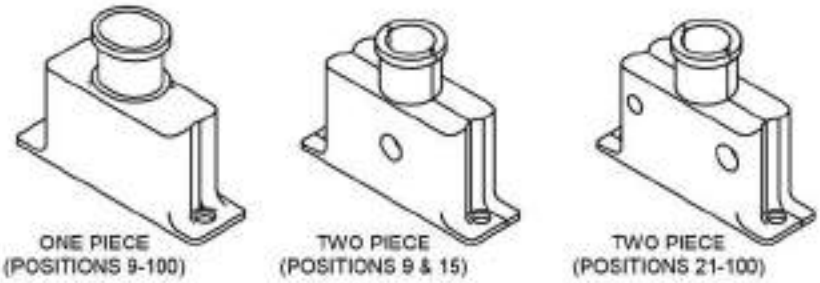

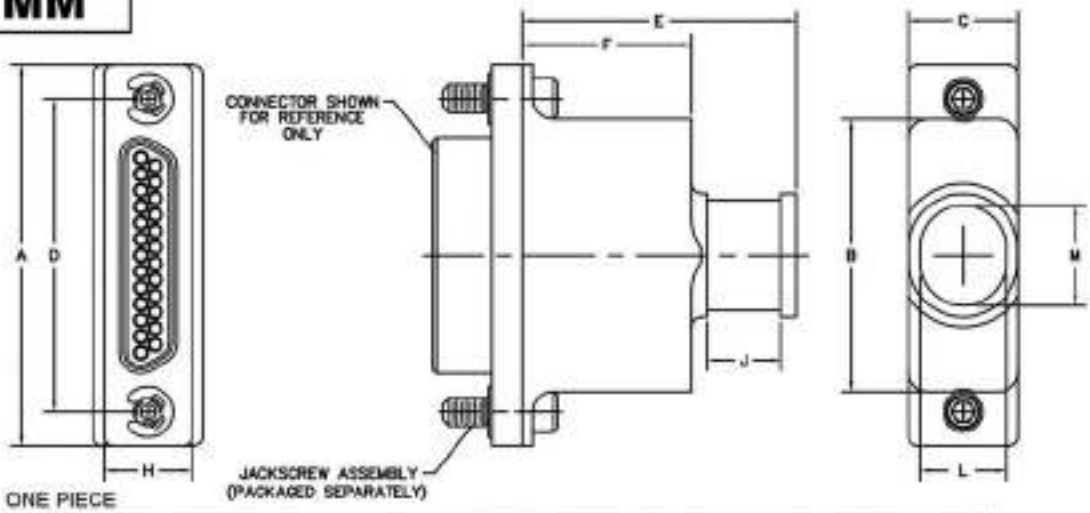

ONE PIECE

DIMENSIONS												
SIZE	CONTACT ROWS	A	B	C	D	E	F	H	J	L	M	HARDWARE
9	2	.775	.440	.340	.565	.843	.520	.298	.229	SEE TABLE A ON PART# SHT		#2-56 UNC THD (.092 DIA THRU)
15		.925	.590		.715							
21		1.075	.740		.865							
25		1.175	.840		.965							
31		1.325	.990		1.115							
37		1.475	1.140		1.265							
51		1.825	1.490		1.615	.933	.610	.341				
51	3	1.425	1.090	.380	1.215							
69		1.725	1.390		1.515							
100	4	2.160	1.522	.430	1.800	.953	.630	.384				#4-40 UNC THD (.147 DIA THRU)

TWO PIECE

DIMENSIONS												
SIZE	CONTACT ROWS	A	B	C	D	E	F	H	J	L	M	HARDWARE
9	2	.775	.480	.340	.565	.843	.520	.298	.229	SEE TABLE B ON PART# SHT		#2-56 UNC THD (.092 DIA THRU)
15		.925	.630		.715							
21		1.075	.780		.865							
25		1.175	.880		.965							
31		1.325	1.030		1.115							
37		1.475	1.180		1.265							
51		1.825	1.530		1.615	.933	.610	.341				
51	3	1.425	1.130	.380	1.215							
69		1.725	1.430		1.515							
100	4	2.160	1.528	.430	1.800	.953	.630	.384				#4-40 UNC THD (.147 DIA THRU)

RUGGED: MM–252–031–000–4100
XX–XXX–XXX–XXX–XXX–XXXX–XXX

SERIES

MM .050" Rugged Metal Backshell

BODY

2 2-Row (Sizes 9 thru 51)
3 3-Row (Sizes 51 & 69)
4 4-Row (Size 100)

BODY STYLE:
3 Straight, one piece
5 Straight, two piece***

BODY MATERIAL:
2 Aluminum, with electroless nickel plating
3 Aluminum, with electrodeposited cadmium ☒
4 Aluminum, with hard anodized black plating

SIZE

XXX 009, 015, 021, 025, 031, 037, 051, 069, 100

EXIT

000 Standard exit, see Table A
AAA Large exit, see Table A**
BBB Small exit, see Table A**

HARDWARE

STYLE OF HARDWARE:
00 None
22 Two fixed jacknut assemblies (62*)
41 Two turning jackscrews, allen head, retaining ring (81*)
43 Two turning jackscrews, slot head, retaining ring (83*)
44 Two long turning jackscrews, slot head, retaining ring (84*)

POLARIZATION / WIRING:
00 None

OPTIONS

0FZ Required for recptacles with grounding fingers when ordering hardware styles 41, 43, 44, 81, 83, & 84

* = Use number in parenthesis when ordering size 100.
** = Available with Body Style 3 (one piece) only.
*** = Sizes 9 and 15 not recommended for solder cup applications or 24 AWG wire applications.

Stainless steel micro band for shield termination - AirBorn part number CDG10026, shipped with each backshell
Band-it application tool - AirBorn part number CDG10027

☒ = Option not ROHS compliant

TABLE A (ONE PIECE)

EXIT DIMENSIONS						
SIZE	000		AAA		BBB	
	L	M	L	M	L	M
9	—	.188	.265	.310	—	.129
15	—	.230		.458	—	.162
21	.265	.257		.608	—	.188
25		.310		.708	—	.206
31		.330		.858	—	.225
37		.375		1.008	—	.242
51		.515		1.034	.265	.300
51	.297	.470	.297	.921	—	.290
69		.620		1.158	.297	.361
100	.344	.688	.344	1.342	.344	.461

TABLE B (TWO PIECE)

EXIT DIMENSIONS		
SIZE	000	
	L	M
9	—	.188
15	—	.230
21	.240	.258
25		.325
31		.346
37		.396
51		.554
51	.280	.492
69		.635
100	.330	.711

AirBorn

EMI/RFI 45° Backshells

.050"

9 thru 100 Contacts

Rugged Metal

MM

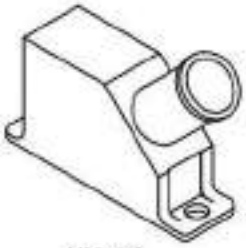

MM, 45°
(ONE PIECE)

MM, 45°
(TWO PIECE)
(POSITIONS 9 & 15)

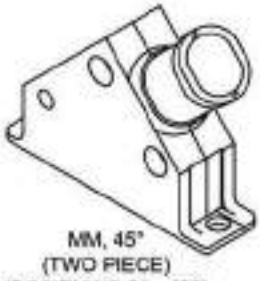

MM, 45°
(TWO PIECE)
(POSITIONS 21 - 100)

Note: 21 & 25 position, 2 piece backshells use two screw clamping configurations.

MM, 45° (ONE PIECE)

DIMENSIONS													
SIZE	CONTACT ROWS	A	B	C	D	E	F	H	J	K	L	M	HARDWARE
9	2	.775	.440	.340	.565	.696	.500	.298	.229	.804	—	.188	#2-56 UNC THD (.092 DIA THRU)
15		.925	.590		.715	.721	.525			.954	—	.230	
21		1.075	.740		.865	.746	.550			1.103	—	.257	
25		1.175	.840		.965	.796	.600			1.203	.265	.310	
31		1.325	.990		1.115	.846	.650			1.353		.330	
37		1.475	1.140		1.265	.921	.725			1.503		.375	
51		1.825	1.490		1.615	1.144	.950			1.853		.510	
51	3	1.425	1.090	.380	1.215	.946	.750	.341		1.453	.297	.470	
69		1.725	1.390		1.515					1.753		.620	
100	4	2.160	1.522	.430	1.800	1.146	.950	.384		2.036	.344	.688	#4-40 UNC THD (.147 DIA THRU)

MM, 45° (TWO PIECE)

DIMENSIONS													
SIZE	CONTACT ROWS	A	B	C	D	E	F	H	J	K	L	M	HARDWARE
9	2	.775	.480	.340	.565	.855	.650	.298	.229	.806	—	.188	#2-56 UNC THD (.092 DIA THRU)
15		.925	.630		.715	.831	.625			.944	—	.230	
21		1.075	.780		.865	.985	.421			1.059	.240	.268	
25		1.175	.880		.965	1.031	.400			1.159		.333	
31		1.325	1.030		1.115	1.046				1.309		.354	
37		1.475	1.180		1.265	1.081				1.459		.404	
51		1.825	1.530		1.615	1.193				1.809		.559	
51	3	1.425	1.130	.380	1.215	1.233	.625	.341		1.409	.280	.492	
69		1.725	1.430		1.515	1.378	.527			1.703		.642	
100	4	2.160	1.522	.430	1.800	1.403	.532	.384		1.973	.330	.711	#4-40 UNC THD (.147 DIA THRU)

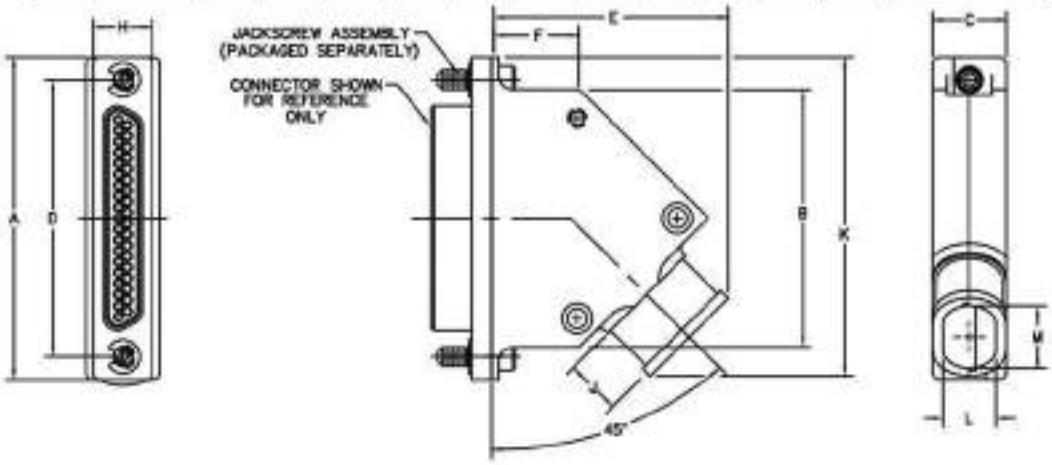

RUGGED: MM–242–031–000–4100
XX–XXX–XXX–XXX–XXXX–XXX

SERIES

MM .050" Rugged Metal Backshell

BODY

2 2-Row (Sizes 9 thru 51)
3 3-Row (Sizes 51 & 69)
4 4-Row (Size 100)

BODY STYLE:
4 45°, one piece
6 45°, two piece **

BODY MATERIAL:
2 Aluminum, with electroless nickel plating
3 Aluminum, with electrodeposited cadmium ☒
4 Aluminum, with hard anodized black plating

SIZE

XXX 009, 015, 021, 025, 031, 037, 051, 069, 100

CONTACTS

TYPE CONTACTS/TERMINATIONS:
000 None

HARDWARE

STYLE OF HARDWARE:
00 None
22 Two fixed jacknut assemblies (62*)
41 Two turning jackscrews, alen head, retaining ring (81*)
43 Two turning jackscrews, slot head, retaining ring (83*)

POLARIZATION / WIRING:
00 None

OPTIONS

0FZ Required for recptacles with grounding fingers when ordering hardware styles 41, 43, 81, & 83

* = Use number in parenthesis when ordering size 100.
** = Sizes 9 and 15 not recommended for solder cup applications.

Stainless steel micro band for shield termination - AirBorn part number CDG10026
Band-it application tool - AirBorn part number CDG10027

☒ = Option not RoHS compliant

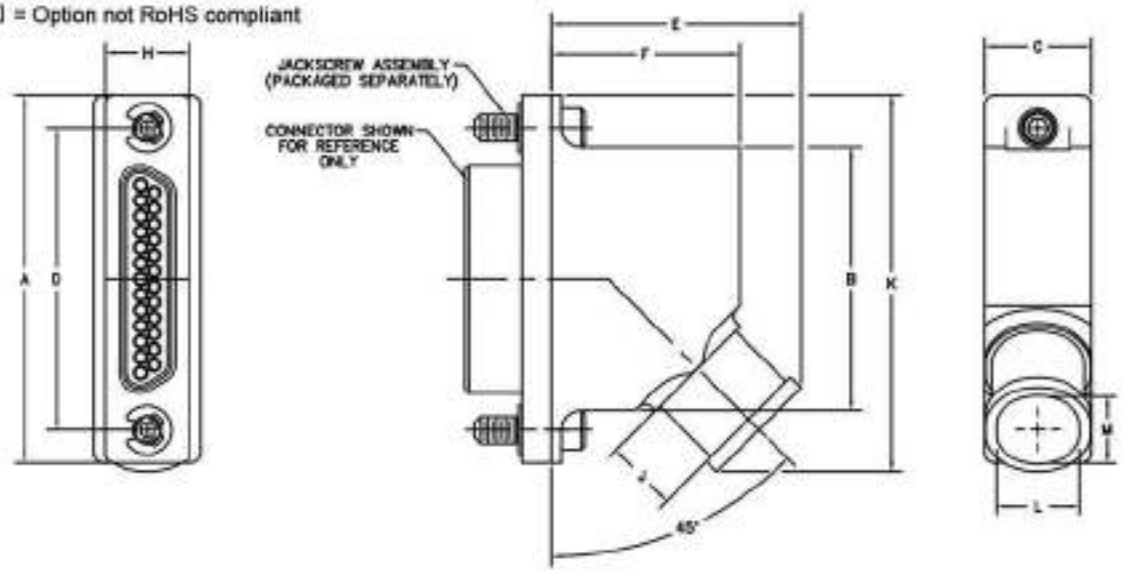

AirBorn

EMI/RFI 90° Backshells

.050"

9 thru 100 Contacts

Rugged Metal

MM

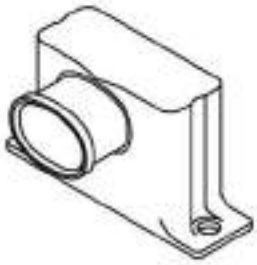

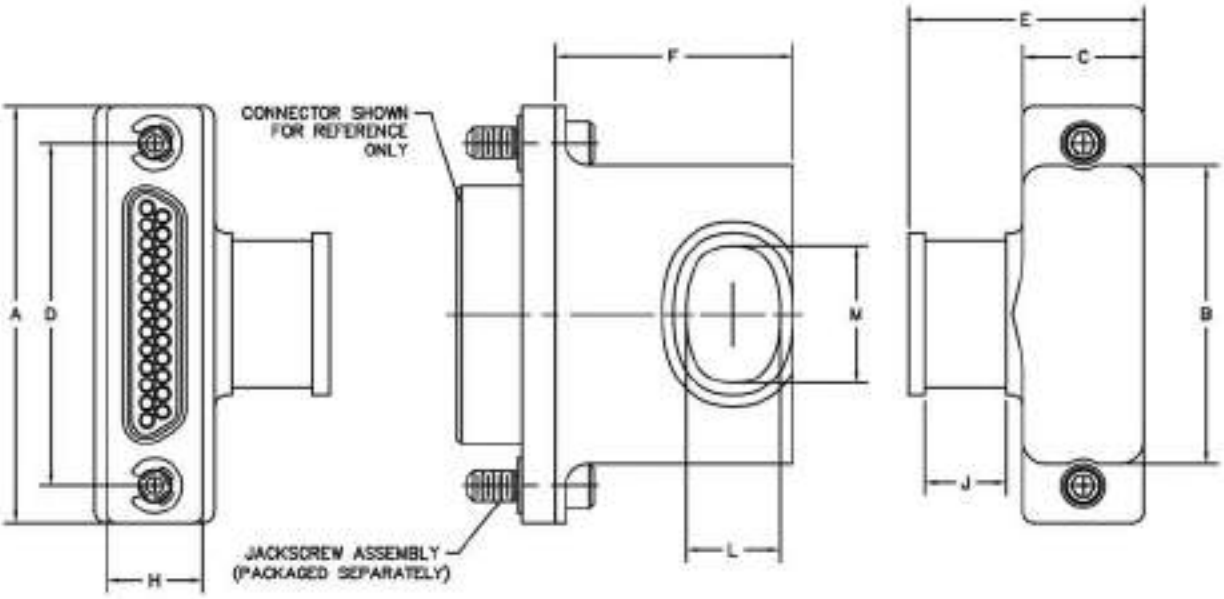

ONE PIECE

DIMENSIONS												
SIZE	CONTACT ROWS	A	B	C	D	E	F	H	J	L	M	HARDWARE
9	2	.775	.440	.340	.565	.663	.671	.298	.229	.256	.268	#2-56 UNC THD (.092 DIA THRU)
15		.925	.590		.715						.311	
21		1.075	.740		.865						.331	
25		1.175	.840		.965						.387	
31		1.325	.990		1.115						.450	
37		1.475	1.140		1.265						.511	
51		1.825	1.490		1.615						.678	
51	3	1.425	1.090	.380	1.215	.703	.703	.341		.298	.619	
69		1.725	1.390		1.515						.823	
100	4	2.160	1.522	.430	1.800	.753	.749	.384		.344	1.083	#4-40 UNC THD (.147 DIA THRU)

RUGGED: MM–272–031–000–4100
XX–XXX–XXX–XXX–XXX–XXXX

SERIES

MM .050" Rugged Metal Backshell

BODY

2 2-Row (Sizes 9 thru 51)
3 3-Row (Sizes 51 & 69)
4 4-Row (Size 100)

BODY STYLE:
7 90°, one piece

BODY MATERIAL:
2 Aluminum, with electroless nickel plating
3 Aluminum, with electrodeposited cadmium ☒
4 Aluminum, with hard anodized black plating

SIZE

XXX 009, 015, 021, 025, 031, 037, 051, 069, 100

EXIT

000 Standard exit**

HARDWARE

STYLE OF HARDWARE:
00 None
22 Two fixed jacknut assemblies (62*)
41 Two turning jackscrews, allen head, retaining ring (81*)
43 Two turning jackscrews, slot head, retaining ring (83*)
44 Two long turning jackscrews, slot head, retaining ring (84*)

POLARIZATION / WIRING:
00 None

* = Use number in parenthesis when ordering size 100.
** = Backshell exits are designed to accomodate 26AWG wire or smaller

Stainless steel micro band for shield termination - AirBorn part number CDG10026, shipped with each backshell
Band-it application tool - AirBorn part number CDG10027

☒ = Option not ROHS compliant

AirBorn

EMI/RFI Straight Backshells

.050"

9 thru 51 Contacts

Low Profile Metal

MQ

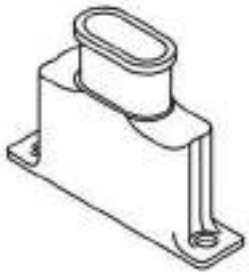

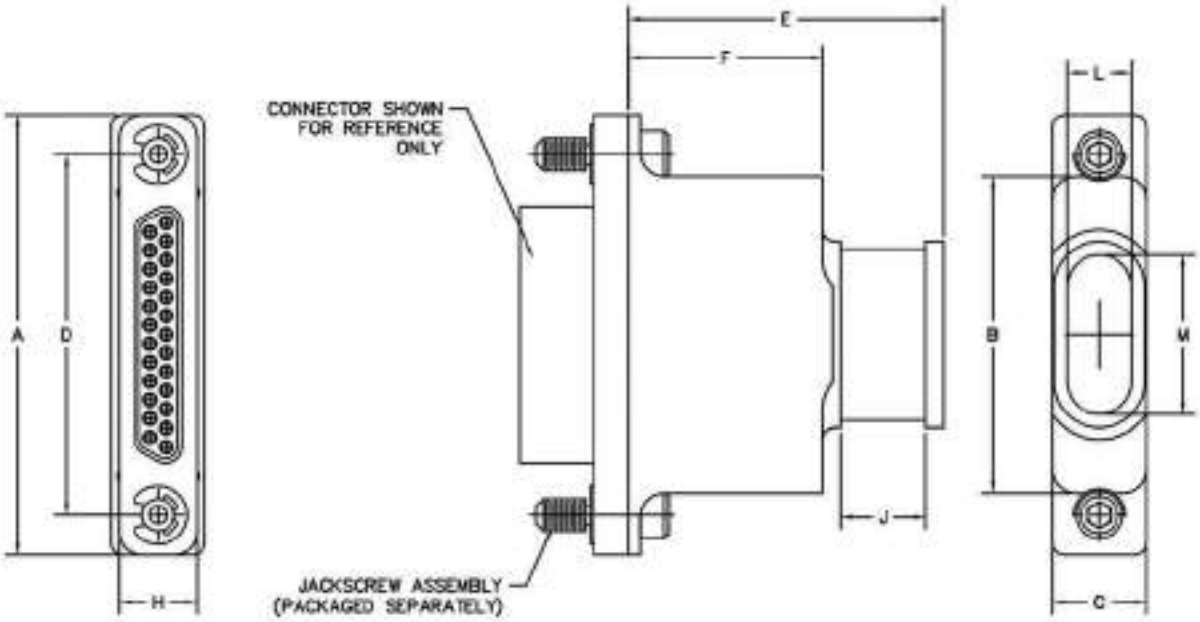

ONE PIECE

DIMENSIONS												
SIZE	CONTACT ROWS	A	B	C	D	E	F	H	J	L	M	HARDWARE
9	2	.778	.448	.250	.565	.843	.520	.208	.229	.172	.197	#2-56 UNC THD (.092 DIA THRU)
15		.928	.598		.715						.279	
21		1.078	.748		.865						.339	
25		1.178	.848		.965						.428	
31		1.328	.998		1.115						.462	
37		1.478	1.148		1.265						.531	
51	3	1.428	1.098	.292	1.215	.933	.610	.250		.220	.596	

RUGGED: MQ–232–025–000–4100
XX–XXX–XXX–XXX–XXXX

SERIES

MQ .050" Low Profile Metal Backshell

BODY

2 2-Row (Sizes 9 thru 37)
3 3-Row (Sizes 51)

BODY STYLE:
3 Straight, one piece

BODY MATERIAL:
2 Aluminum, with electroless nickel plating
3 Aluminum, with electrodeposited cadmium ☒
4 Aluminum, with hard anodized black plating

SIZE

XXX 009, 015, 021, 025, 031, 037, 051

EXIT

000 Standard exit

HARDWARE

STYLE OF HARDWARE:
00 None
22 Two fixed jacknut assemblies
41 Two turning jackscrews, allen head, retaining ring
43 Two turning jackscrews, slot head, retaining ring
44 Two long turning jackscrews, slot head, retaining ring

POLARIZATION / WIRING:
00 None

Stainless steel micro band for shield termination - AirBorn part number CDG10026, shipped with each backshell
Band-it application tool - AirBorn part number CDG10027

☒ = Option not ROHS compliant

AirBorn

Dust Covers

.050"

9 thru 100 Contacts

Rugged Metal

MD

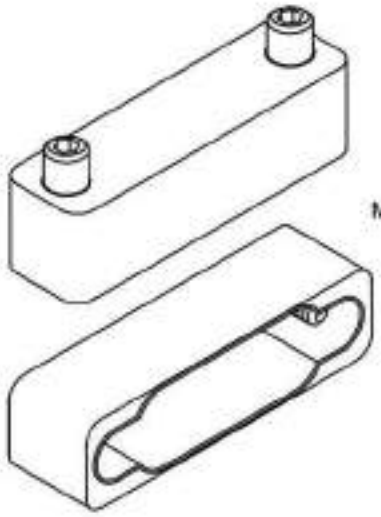

MD021RSM245

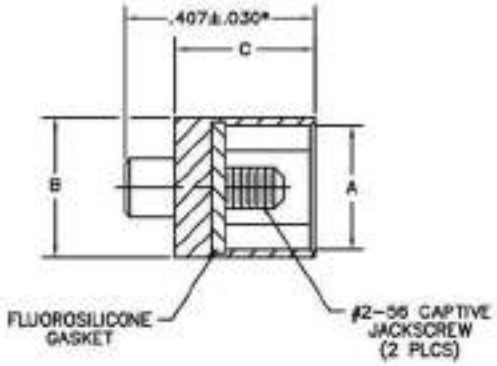

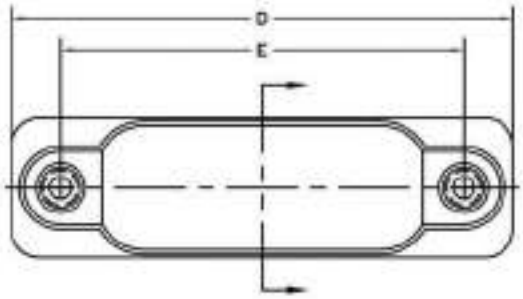

DIMENSIONS								
SIZE	A		B		C	D	E	HARDWARE
	PLUG	RCPT	PLUG	RCPT				
9	.203	.265	.298	.298	.299	.775	.565	#2-56 UNC THD
15						.925	.715	
21						1.075	.865	
25						1.175	.965	
31						1.325	1.115	
37						1.475	1.265	
51	.246	.308	.341	.341		1.425	1.215	
69						1.725	1.515	
100	.291	.394	.381	.434		2.152	1.800	#4-40 UNC THD

* = 100 POS DIMENSION .460±.030

RECEPTACLE: MD 021 RS M2 45
XX XXX XX XX XX

PLUG	RECEPTACLE
SERIES	
MD .050" Rugged Metal Dust Cover	MD .050" Rugged Metal Dust Cover
SIZE	
XXX 009, 015, 021, 025, 031, 037, 051, 069, 100	XXX 009, 015, 021, 025, 031, 037, 051, 069, 100
STYLE	
RP Plug, rugged metal	RS Receptacle, rugged metal
PLATING	
M2 Electroless nickel M3 Electrodeposited cadmium ☒ M4 Hard anodized black	M2 Electroless nickel M3 Electrodeposited cadmium ☒ M4 Hard anodized black
HARDWARE	
STYLE OF HARDWARE: 22 Two integrated jacknuts (62*) 45 Two turning jackscrews, allen head, captivated** (85*)	STYLE OF HARDWARE: 22 Two integrated jacknuts (62*) 45 Two turning jackscrews, allen head, captivated** (85*)

* = Use number in parenthesis when ordering size 100.
** = Captive hardware is factory installed and non-removable.

Not for use with rear panel mount connectors
Not for use on receptacles with grounding fingers

☒ = Option not RoHS compliant

AirBorn

ESD Dust Covers

.050"

9 thru 100 Contacts

Rugged Metal Low Profile Plastic

MD

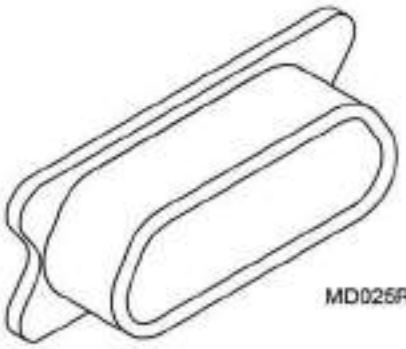

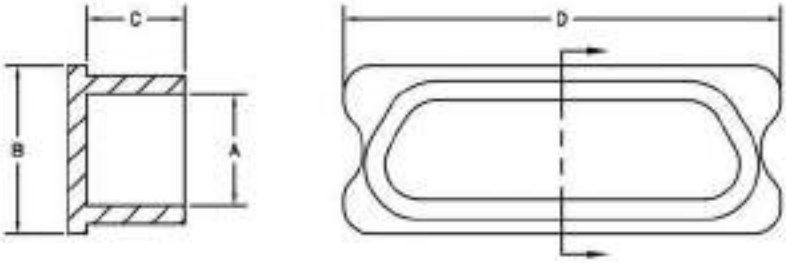

EXAMPLE: MD025RS
MDXXXXX

SIZE:

R – RUGGED
L – LOW PROFILE

P – PLUG
S – RECEPTACLE

Material: Carbon filled polypropylene
Static Decay meets MIL–PRF–81705D
Surface Resistivity per ASTM D 257–99(2005): $<1.0 \times 10^{12}$ ohms/square

RUGGED PLASTIC

DIMENSIONS											
SIZE	CONTACT ROWS	A		B		C		D		PART NUMBER	
		PLUG	RCPT	PLUG	RCPT	PLUG	RCPT	PLUG	RCPT	PLUG	RCPT
9	2	.176	.238	.298	.360	.195	.215	.475	.460	MD009RP	MD009RS
15								.625	.610	MD015RP	MD015RS
21								.775	.760	MD021RP	MD021RS
25								.875	.860	MD025RP	MD025RS
31								1.025	1.010	MD031RP	MD031RS
37								1.175	1.160	MD037RP	MD037RS
51								1.525	1.510	MD051RP–2	MD051RS–2
51	3	.219	.281	.340	.400			1.125	1.110	MD051RP	MD051RS
69								1.425	1.410	MD069RP	MD069RS
100	4	.265	.379	.385	.500			1.500	1.615	MD100RP	MD100RS

LOW PROFILE PLASTIC

DIMENSIONS											
SIZE	CONTACT ROWS	A		B		C		D		PART NUMBER	
		PLUG	RCPT	PLUG	RCPT	PLUG	RCPT	PLUG	RCPT	PLUG	RCPT
9	2	.125	.205	.256	.315	.210	.195	.400	.430	MD009LP	MD009LS
15								.550	.580	MD015LP	MD015LS
21								.700	.730	MD021LP	MD021LS
25								.800	.830	MD025LP	MD025LS
31								.950	.980	MD031LP	MD031LS
37								1.100	1.130	MD037LP	MD037LS
51	3	.168	.247	.298	.360			1.050	1.080	MD051LP	MD051LS

Not for use on receptacles with grounding fingers

AirBorn

O-Rings, Fluorosilicone & Butyl

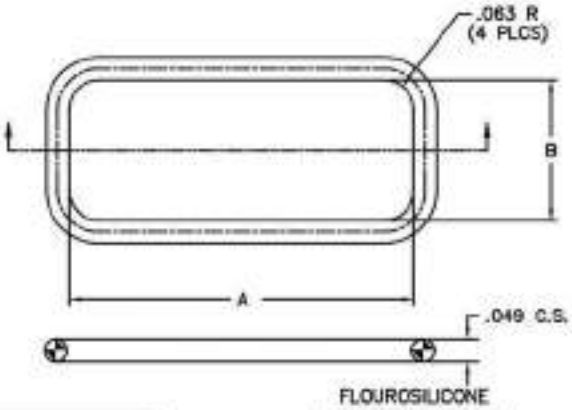

DIMENSIONS (Ref Only)			
SIZE	CONTACT ROWS	A	B
9	2	.739	.301
15		.889	
21		1.039	
25		1.139	
31		1.297	
37		1.439	
51	3	1.439	.344
69		1.731	
100	4	2.159	.421

FLOUROSILICONE

PART NUMBERS	
SIZE	P/N
9	CDG17148
15	CDG17149
21	CDG17150
25	CDG17151
31	CDG17152
37	CDG17153
51	CDG17154
69	CDG17155
100	CDG17156

BUTYL

PART NUMBERS	
SIZE	P/N
9	CDG17478
15	CDG17479
21	CDG17480
25	CDG17481
31	CDG17482
37	CDG17483
51	CDG17484
69	CDG17485
100	CDG17486

EMI Gasket, Fluorosilicone

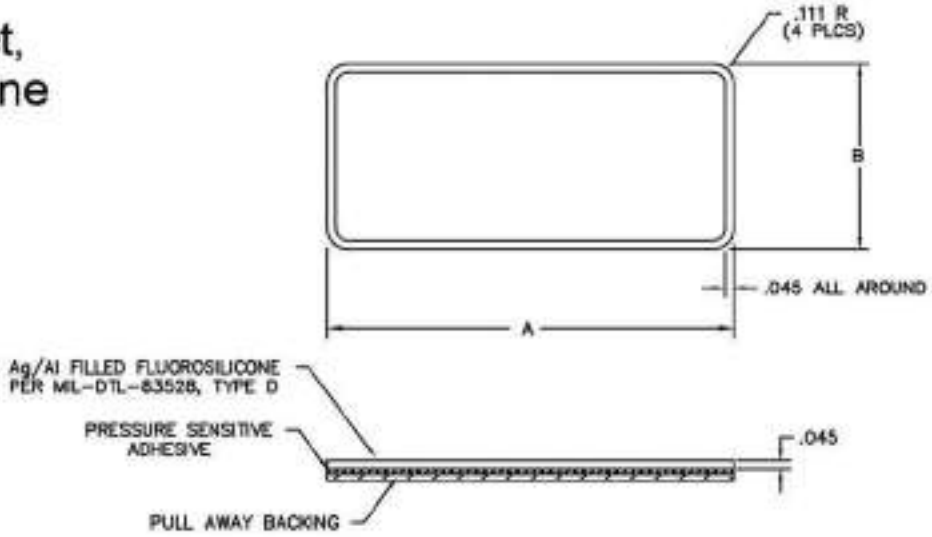

DIMENSIONS (Ref Only)			
SIZE	CONTACT ROWS	A	B
9	2	.872	.395
15		1.022	
21		1.172	
25		1.272	
31		1.422	
37		1.572	
51	3	1.572	.438
69		1.872	
100	4	2.298	.515

PART NUMBERS	
SIZE	P/N
9	CDG15933
15	CDG15934
21	CDG15935
25	CDG15936
31	CDG15937
37	CDG13044
51	CDG15938
69	CDG12978
100	CDG15939

AirBorn

Hardware

MM - MN - MQ - MP
Rear Panel Mount Hardware for Standard I/O Connectors

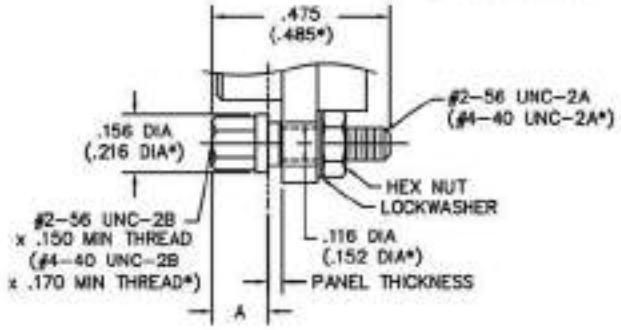

PANEL THK	THREAD SIZE	PART NUMBER	A MAX
.040	#2-56	MM-000-000-000-2400-0F4	.150
.050		MM-000-000-000-2500-0F5	.140
.060		MM-000-000-000-2600-0F6	.130
.070		MM-000-000-000-2800-0F7	.120
.080		MM-000-000-000-2900-0F8	.110
.040	#4-40	MM-000-000-000-6400-0F9	.150
.050		MM-000-000-000-6500-0FA	.140
.060		MM-000-000-000-6600-0FB	.130
.070		MM-000-000-000-6800-0FC	.120
.080		MM-000-000-000-6900-0FD	.110

* = Dimensions for 100 position connectors

MM - MN - MQ - MP
Rear Panel Mount Hardware for I/O Connectors with Grounding Fingers, Integrated Shield Termination, or I/O with EMI/RFI Backshell

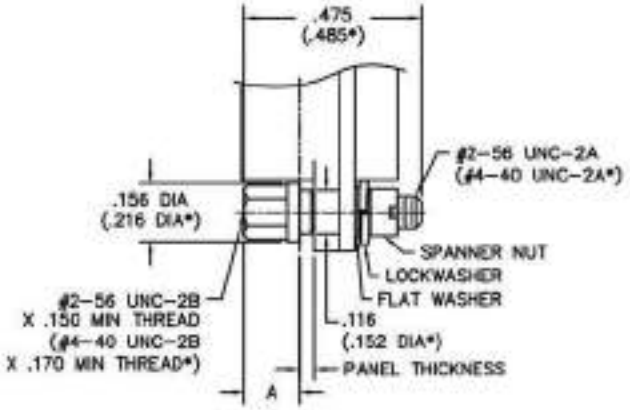

PANEL THK	THREAD SIZE	PART NUMBER	A MAX
.040	#2-56	MM-000-000-000-2400-0G7	.150
.050		MM-000-000-000-2500-0G7	.140
.060		MM-000-000-000-2600-0G7	.130
.070		MM-000-000-000-2800-0G7	.120
.080		MM-000-000-000-2900-0G7	.110
.040	#4-40	MM-000-000-000-6400-0G7	.150
.050		MM-000-000-000-6500-0G7	.140
.060		MM-000-000-000-6600-0G7	.130
.070		MM-000-000-000-6800-0G7	.120
.080		MM-000-000-000-6900-0G7	.110

* = Dimensions for 100 position connectors

Panel Mounting Dimensions for Receptacles With Grounding Fingers

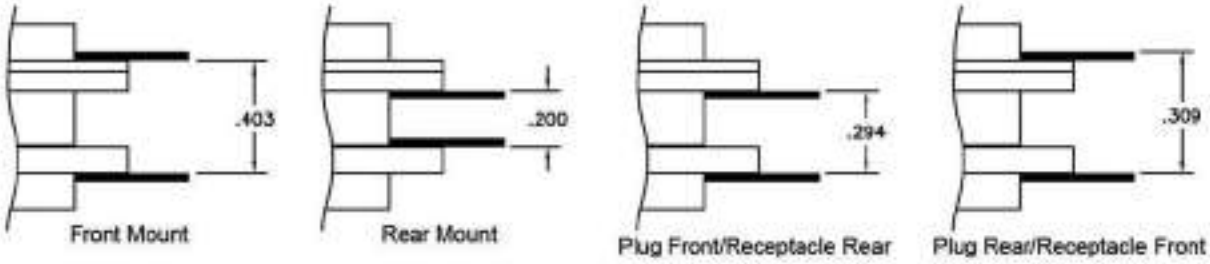

Front Panel Mounting Receptacles With Grounding Fingers

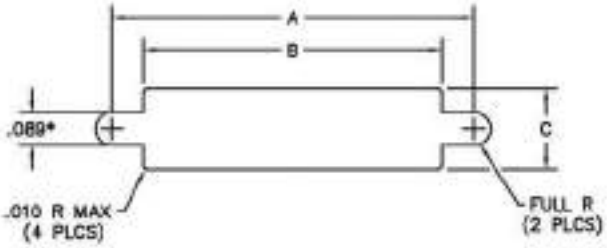

* = .118 FOR 100 POSITION CONNECTOR

DIMENSIONS				
SIZE	A +.004 −.000	B +.005 −.000	C +.004 −.000 MP,MQ,MR,NS MQHT, MSHT	C +.004 −.000 MK,ML,MM,MN MKHT, MMHT
9	.570	.400	.215	.273
15	.720	.550		
21	.870	.700		
25	.970	.800		
31	1.120	.950		
37	1.270	1.100		
51	1.220	1.050	.256	.311
69	1.520	1.350	—	
100	1.805	1.442	—	.383

Rear Panel Mounting Receptacles With Grounding Fingers

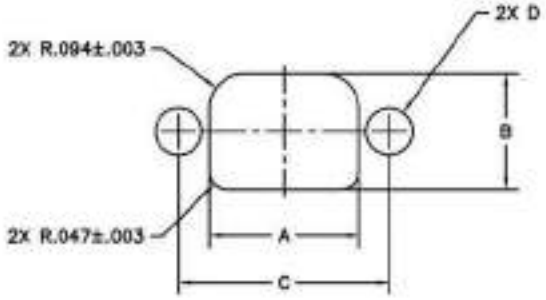

DIMENSIONS				
SIZE	A +.004 −.000	B +.004 −.000	C ±.005	D ±.005 THRU
9	.401	.308	.565	.125
15	.551		.715	
21	.701		.865	
25	.801		.965	
31	.951		1.115	
37	1.101		1.265	
51	1.051	.351	1.215	
69	1.351		1.515	
100	1.505	.391	1.800	.160

C-Clip Hardware

MM - MN - MQ - MP - MMHT - MQHT
Jacking Hardware

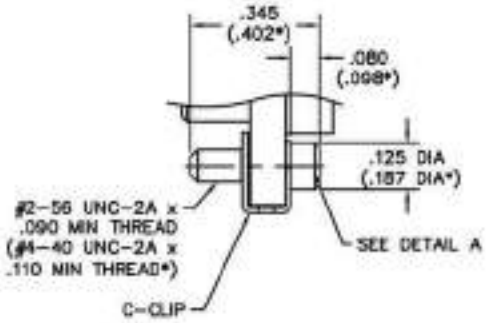

SHORT TURNING
JACKSCREW ASSEMBLY
C-CLIP RETAINER

#2-56 JACKSCREW, ALLEN HEAD 00-000-000-000-4A00
#4-40 JACKSCREW, ALLEN HEAD 00-000-000-000-BA00

MM - MQ
I/O with EMI/RFI Backshell

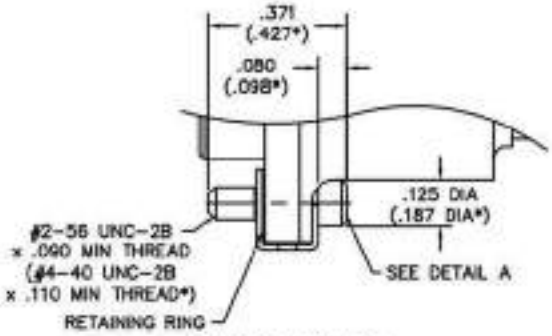

SHORT TURNING
JACKSCREW ASSEMBLY
C-CLIP RETAINER

#2-56 JACKSCREW, ALLEN HEAD 00-000-000-000-4A00-01G
#4-40 JACKSCREW, ALLEN HEAD 00-000-000-000-BA00-04A

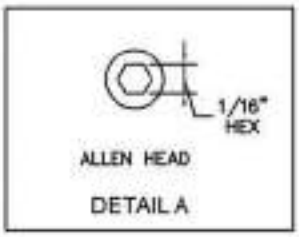

* = Dimensions for #4-40 hardware (100 position connectors)

MILITARY CROSS REFERENCE

AirBorn

Military Cross Reference Chart

M83513 / 01

M83513 / 01 - AA	MM-21A-009-113-0000	M83513 / 01 - CP	MM-215-021-113-0000	M83513 / 01 - FK	MM-21K-037-113-0000
M83513 / 01 - AC	MM-213-009-113-0000	M83513 / 01 - CT	MM-21T-021-113-0000	M83513 / 01 - FN	MM-212-037-113-0000
M83513 / 01 - AK	MM-21K-009-113-0000	M83513 / 01 - DA	MM-21A-025-113-0000	M83513 / 01 - FP	MM-215-037-113-0000
M83513 / 01 - AN	MM-212-009-113-0000	M83513 / 01 - DC	MM-213-025-113-0000	M83513 / 01 - FT	MM-21T-037-113-0000
M83513 / 01 - AP	MM-215-009-113-0000	M83513 / 01 - DK	MM-21K-025-113-0000	M83513 / 01 - GA	MM-21A-051-113-0000
M83513 / 01 - AT	MM-21T-009-113-0000	M83513 / 01 - DN	MM-212-025-113-0000	M83513 / 01 - GC	MM-213-051-113-0000
M83513 / 01 - BA	MM-21A-015-113-0000	M83513 / 01 - DP	MM-215-025-113-0000	M83513 / 01 - GK	MM-21K-051-113-0000
M83513 / 01 - BC	MM-213-015-113-0000	M83513 / 01 - DT	MM-21T-025-113-0000	M83513 / 01 - GN	MM-212-051-113-0000
M83513 / 01 - BK	MM-21K-015-113-0000	M83513 / 01 - EA	MM-21A-031-113-0000	M83513 / 01 - GP	MM-215-051-113-0000
M83513 / 01 - BN	MM-212-015-113-0000	M83513 / 01 - EC	MM-213-031-113-0000	M83513 / 01 - GT	MM-21T-051-113-0000
M83513 / 01 - BP	MM-215-015-113-0000	M83513 / 01 - EK	MM-21K-031-113-0000	M83513 / 01 - HA	MM-21A-100-113-0000
M83513 / 01 - BT	MM-21T-015-113-0000	M83513 / 01 - EN	MM-212-031-113-0000	M83513 / 01 - HC	MM-213-100-113-0000
M83513 / 01 - CA	MM-21A-021-113-0000	M83513 / 01 - EP	MM-215-031-113-0000	M83513 / 01 - HK	MM-21K-100-113-0000
M83513 / 01 - CC	MM-213-021-113-0000	M83513 / 01 - ET	MM-21T-031-113-0000	M83513 / 01 - HN	MM-212-100-113-0000
M83513 / 01 - CK	MM-21K-021-113-0000	M83513 / 01 - FA	MM-21A-037-113-0000	M83513 / 01 - HP	MM-215-100-113-0000
M83513 / 01 - CN	MM-212-021-113-0000	M83513 / 01 - FC	MM-213-037-113-0000	M83513 / 01 - HT	MM-21T-100-113-0000

M83513 / 02

M83513 / 02 - AA	MM-22A-009-213-0000-900	M83513 / 02 - CP	MM-225-021-213-0000-900	M83513 / 02 - FK	MM-22K-037-213-0000-900
M83513 / 02 - AC	MM-223-009-213-0000-900	M83513 / 02 - CT	MM-22T-021-213-0000-900	M83513 / 02 - FN	MM-222-037-213-0000-900
M83513 / 02 - AK	MM-22K-009-213-0000-900	M83513 / 02 - DA	MM-22A-025-213-0000-900	M83513 / 02 - FP	MM-225-037-213-0000-900
M83513 / 02 - AN	MM-222-009-213-0000-900	M83513 / 02 - DC	MM-223-025-213-0000-900	M83513 / 02 - FT	MM-22T-037-213-0000-900
M83513 / 02 - AP	MM-225-009-213-0000-900	M83513 / 02 - DK	MM-22K-025-213-0000-900	M83513 / 02 - GA	MM-32A-051-213-0000-900
M83513 / 02 - AT	MM-22T-009-213-0000-900	M83513 / 02 - DN	MM-222-025-213-0000-900	M83513 / 02 - GC	MM-323-051-213-0000-900
M83513 / 02 - BA	MM-22A-015-213-0000-900	M83513 / 02 - DP	MM-225-025-213-0000-900	M83513 / 02 - GK	MM-32K-051-213-0000-900
M83513 / 02 - BC	MM-223-015-213-0000-900	M83513 / 02 - DT	MM-22T-025-213-0000-900	M83513 / 02 - GN	MM-322-051-213-0000-900
M83513 / 02 - BK	MM-22K-015-213-0000-900	M83513 / 02 - EA	MM-22A-031-213-0000-900	M83513 / 02 - GP	MM-325-051-213-0000-900
M83513 / 02 - BN	MM-222-015-213-0000-900	M83513 / 02 - EC	MM-223-031-213-0000-900	M83513 / 02 - GT	MM-32T-051-213-0000-900
M83513 / 02 - BP	MM-225-015-213-0000-900	M83513 / 02 - EK	MM-22K-031-213-0000-900	M83513 / 02 - HA	MM-42A-100-213-0000-900
M83513 / 02 - BT	MM-22T-015-213-0000-900	M83513 / 02 - EN	MM-222-031-213-0000-900	M83513 / 02 - HC	MM-423-100-213-0000-900
M83513 / 02 - CA	MM-22A-021-213-0000-900	M83513 / 02 - EP	MM-225-031-213-0000-900	M83513 / 02 - HK	MM-42K-100-213-0000-900
M83513 / 02 - CC	MM-223-021-213-0000-900	M83513 / 02 - ET	MM-22T-031-213-0000-900	M83513 / 02 - HN	MM-422-100-213-0000-900
M83513 / 02 - CK	MM-22K-021-213-0000-900	M83513 / 02 - FA	MM-22A-037-213-0000-900	M83513 / 02 - HP	MM-425-100-213-0000-900
M83513 / 02 - CN	MM-222-021-213-0000-900	M83513 / 02 - FC	MM-223-037-213-0000-900	M83513 / 02 - HT	MM-42T-100-213-0000-900

M83513 / 03

M83513 / 03-A01A	MM-21A-009-161-00W1	M83513 / 03-A04P	MM-215-009-161-00V2	M83513 / 03-A08K	MM-21K-009-155-0000
M83513 / 03-A01C	MM-213-009-161-00W1	M83513 / 03-A04T	MM-21T-009-161-00V2	M83513 / 03-A08N	MM-212-009-155-0000
M83513 / 03-A01K	MM-21K-009-161-00W1	M83513 / 03-A05A	MM-21A-009-143-0000	M83513 / 03-A08P	MM-215-009-155-0000
M83513 / 03-A01N	MM-212-009-161-00W1	M83513 / 03-A05C	MM-213-009-143-0000	M83513 / 03-A08T	MM-21T-009-155-0000
M83513 / 03-A01P	MM-215-009-161-00W1	M83513 / 03-A05K	MM-21K-009-143-0000	M83513 / 03-A09A	MM-21A-009-161-00Y1
M83513 / 03-A01T	MM-21T-009-161-00W1	M83513 / 03-A05N	MM-212-009-143-0000	M83513 / 03-A09C	MM-213-009-161-00Y1
M83513 / 03-A02A	MM-21A-009-161-00W2	M83513 / 03-A05P	MM-215-009-143-0000	M83513 / 03-A09K	MM-21K-009-161-00Y1
M83513 / 03-A02C	MM-213-009-161-00W2	M83513 / 03-A05T	MM-21T-009-143-0000	M83513 / 03-A09N	MM-212-009-161-00Y1
M83513 / 03-A02K	MM-21K-009-161-00W2	M83513 / 03-A06A	MM-21A-009-153-0000	M83513 / 03-A09P	MM-215-009-161-00Y1
M83513 / 03-A02N	MM-212-009-161-00W2	M83513 / 03-A06C	MM-213-009-153-0000	M83513 / 03-A09T	MM-21T-009-161-00Y1
M83513 / 03-A02P	MM-215-009-161-00W2	M83513 / 03-A06K	MM-21K-009-153-0000	M83513 / 03-A10A	MM-21A-009-161-00Y2
M83513 / 03-A02T	MM-21T-009-161-00W2	M83513 / 03-A06N	MM-212-009-153-0000	M83513 / 03-A10C	MM-213-009-161-00Y2
M83513 / 03-A03A	MM-21A-009-161-00V1	M83513 / 03-A06P	MM-215-009-153-0000	M83513 / 03-A10K	MM-21K-009-161-00Y2
M83513 / 03-A03C	MM-213-009-161-00V1	M83513 / 03-A06T	MM-21T-009-153-0000	M83513 / 03-A10N	MM-212-009-161-00Y2
M83513 / 03-A03K	MM-21K-009-161-00V1	M83513 / 03-A07A	MM-21A-009-145-0000	M83513 / 03-A10P	MM-215-009-161-00Y2
M83513 / 03-A03N	MM-212-009-161-00V1	M83513 / 03-A07C	MM-213-009-145-0000	M83513 / 03-A10T	MM-21Y-009-161-00Y2
M83513 / 03-A03P	MM-215-009-161-00V1	M83513 / 03-A07K	MM-21K-009-145-0000	M83513 / 03-A11A	MM-21A-009-161-00Y3
M83513 / 03-A03T	MM-21T-009-161-00V1	M83513 / 03-A07N	MM-212-009-145-0000	M83513 / 03-A11C	MM-213-009-161-00Y3
M83513 / 03-A04A	MM-21A-009-161-00V2	M83513 / 03-A07P	MM-215-009-145-0000	M83513 / 03-A11K	MM-21K-009-161-00Y3
M83513 / 03-A04C	MM-213-009-161-00V2	M83513 / 03-A07T	MM-21T-009-145-0000	M83513 / 03-A11N	MM-212-009-161-00Y3
M83513 / 03-A04K	MM-21K-009-161-00V2	M83513 / 03-A08A	MM-21A-009-155-0000	M83513 / 03-A11P	MM-215-009-161-00Y3
M83513 / 03-A04N	MM-212-009-161-00V2	M83513 / 03-A08C	MM-213-009-155-0000	M83513 / 03-A11T	MM-21T-009-161-00Y3

Military Cross Reference Chart

-- Continued from previous page

AirBorn

M83513 / 03 (continued)

M83513 / 03-A12A	MM-21A-009-161-00Y4
M83513 / 03-A12C	MM-213-009-161-00Y4
M83513 / 03-A12K	MM-21K-009-161-00Y4
M83513 / 03-A12N	MM-212-009-161-00Y4
M83513 / 03-A12P	MM-215-009-161-00Y4
M83513 / 03-A12T	MM-21T-009-161-00Y4
M83513 / 03-A13A	MM-21A-009-161-00Y5
M83513 / 03-A13C	MM-213-009-161-00Y5
M83513 / 03-A13K	MM-21K-009-161-00Y5
M83513 / 03-A13N	MM-212-009-161-00Y5
M83513 / 03-A13P	MM-215-009-161-00Y5
M83513 / 03-A13T	MM-21T-009-161-00Y5
M83513 / 03-A14A	MM-21A-009-161-00Y6
M83513 / 03-A14C	MM-213-009-161-00Y6
M83513 / 03-A14K	MM-21K-009-161-00Y6
M83513 / 03-A14N	MM-212-009-161-00Y6
M83513 / 03-A14P	MM-215-009-161-00Y6
M83513 / 03-A14T	MM-21T-006-161-00Y6
M83513 / 03-A15A	MM-21A-009-161-00Y7
M83513 / 03-A15C	MM-213-009-161-00Y7
M83513 / 03-A15K	MM-21K-009-161-00Y7
M83513 / 03-A15N	MM-212-009-161-00Y7
M83513 / 03-A15P	MM-215-009-161-00Y7
M83513 / 03-A15T	MM-21T-009-161-00Y7
M83513 / 03-A16A	MM-21A-009-161-00Y8
M83513 / 03-A16C	MM-213-009-161-00Y8
M83513 / 03-A16K	MM-21K-009-161-00Y8
M83513 / 03-A16N	MM-212-009-161-00Y8
M83513 / 03-A16P	MM-215-009-161-00Y8
M83513 / 03-A16T	MM-21T-009-161-00Y8
M83513 / 03-B01A	MM-21A-015-161-00W1
M83513 / 03-B01C	MM-213-015-161-00W1
M83513 / 03-B01K	MM-21K-015-161-00W1
M83513 / 03-B01N	MM-212-015-161-00W1
M83513 / 03-B01P	MM-215-015-161-00W1
M83513 / 03-B01T	MM-21T-015-161-00W1
M83513 / 03-B02A	MM-21A-015-161-00W2
M83513 / 03-B02C	MM-213-015-161-00W2
M83513 / 03-B02K	MM-21K-015-161-00W2
M83513 / 03-B02N	MM-212-015-161-00W2
M83513 / 03-B02P	MM-215-015-161-00W2
M83513 / 03-B02T	MM-21T-015-161-00W2
M83513 / 03-B03A	MM-21A-015-161-00V1
M83513 / 03-B03C	MM-213-015-161-00V1
M83513 / 03-B03K	MM-21K-015-161-00V1
M83513 / 03-B03N	MM-213-015-161-00V1
M83513 / 03-B03P	MM-215-015-161-00V1
M83513 / 03-B03T	MM-21T-015-161-00V1
M83513 / 03-B04A	MM-21A-015-161-00V2
M83513 / 03-B04C	MM-213-015-161-00V2
M83513 / 03-B04K	MM-21K-015-161-00V2
M83513 / 03-B04N	MM-212-015-161-00V2
M83513 / 03-B04P	MM-215-015-161-00V2
M83513 / 03-B04T	MM-21T-015-161-00V2
M83513 / 03-B05A	MM-21A-015-143-0000
M83513 / 03-B05C	MM-213-015-143-0000
M83513 / 03-B05K	MM-21K-015-143-0000
M83513 / 03-B05N	MM-212-015-143-0000
M83513 / 03-B05P	MM-215-015-143-0000
M83513 / 03-B05T	MM-21T-015-143-0000
M83513 / 03-B06A	MM-21A-015-153-0000
M83513 / 03-B06C	MM-213-015-153-0000
M83513 / 03-B06K	MM-21K-015-153-0000
M83513 / 03-B06N	MM-212-015-153-0000
M83513 / 03-B06P	MM-215-015-153-0000
M83513 / 03-B06T	MM-21T-015-153-0000
M83513 / 03-B07A	MM-21A-015-145-0000
M83513 / 03-B07C	MM-213-015-145-0000
M83513 / 03-B07K	MM-21K-015-145-0000
M83513 / 03-B07N	MM-212-015-145-0000
M83513 / 03-B07P	MM-215-015-145-0000
M83513 / 03-B07T	MM-21T-015-145-0000
M83513 / 03-B08A	MM-21A-015-155-0000
M83513 / 03-B08C	MM-213-015-155-0000
M83513 / 03-B08K	MM-21K-015-155-0000
M83513 / 03-B08N	MM-212-015-155-0000
M83513 / 03-B08P	MM-215-015-155-0000
M83513 / 03-B08T	MM-21T-015-155-0000
M83513 / 03-B09A	MM-21A-015-161-00Y1
M83513 / 03-B09C	MM-213-015-161-00Y1
M83513 / 03-B09K	MM-21K-015-161-00Y1
M83513 / 03-B09N	MM-212-015-161-00Y1
M83513 / 03-B09P	MM-215-015-161-00Y1
M83513 / 03-B09T	MM-21T-015-161-00Y1
M83513 / 03-B10A	MM-21A-015-161-00Y2
M83513 / 03-B10C	MM-213-015-161-00Y2
M83513 / 03-B10K	MM-21K-015-161-00Y2
M83513 / 03-A10N	MM-212-015-161-00Y2
M83513 / 03-B10P	MM-215-015-161-00Y2
M83513 / 03-B10T	MM-21T-015-161-00Y2
M83513 / 03-B11A	MM-21A-015-161-00Y3
M83513 / 03-B11C	MM-213-015-161-00Y3
M83513 / 03-B11K	MM-21K-015-161-00Y3
M83513 / 03-B11N	MM-212-015-161-00Y3
M83513 / 03-B11P	MM-215-015-161-00Y3
M83513 / 03-B11T	MM-21T-015-161-00Y3
M83513 / 03-B12A	MM-21A-015-161-00Y4
M83513 / 03-B12C	MM-213-015-161-00Y4
M83513 / 03-B12K	MM-21K-015-161-00Y4
M83513 / 03-B12N	MM-212-015-161-00Y4
M83513 / 03-B12P	MM-215-015-161-00Y4
M83513 / 03-B12T	MM-21T-015-161-00Y4
M83513 / 03-B13A	MM-21A-015-161-00Y5
M83513 / 03-B13C	MM-213-015-161-00Y5
M83513 / 03-B13K	MM-21K-015-161-00Y5
M83513 / 03-B13N	MM-212-015-161-00Y5
M83513 / 03-B13P	MM-215-015-161-00Y5
M83513 / 03-B13T	MM-21T-015-161-00Y5
M83513 / 03-B14A	MM-21A-015-161-00Y6
M83513 / 03-B14C	MM-213-015-161-00Y6
M83513 / 03-B14K	MM-21K-015-161-00Y6
M83513 / 03-B14N	MM-212-015-161-00Y6
M83513 / 03-B14P	MM-215-015-161-00Y6
M83513 / 03-B14T	MM-21T-015-161-00Y6
M83513 / 03-B15A	MM-21A-015-161-00Y7
M83513 / 03-B15C	MM-213-015-161-00Y7
M83513 / 03-B15K	MM-21K-015-161-00Y7
M83513 / 03-B15N	MM-212-015-161-00Y7
M83513 / 03-B15P	MM-215-015-161-00Y7
M83513 / 03-B15T	MM-21T-015-161-00Y7
M83513 / 03-B16A	MM-21A-015-161-00Y8
M83513 / 03-B16C	MM-213-015-161-00Y8
M83513 / 03-B16K	MM-21K-015-161-00Y8
M83513 / 03-B16N	MM-212-015-161-00Y8
M83513 / 03-B16P	MM-215-015-161-00Y8
M83513 / 03-B16T	MM-21T-015-161-00Y8
M83513 / 03-C01A	MM-21A-021-161-00W1
M83513 / 03-C01C	MM-213-021-161-00W1
M83513 / 03-C01K	MM-21K-021-161-00W1
M83513 / 03-C01N	MM-212-021-161-00W1
M83513 / 03-C01P	MM-215-021-161-00W1
M83513 / 03-C01T	MM-21T-021-161-00W1
M83513 / 03-C02A	MM-21A-021-161-00W2
M83513 / 03-C02C	MM-213-021-161-00W2
M83513 / 03-C02K	MM-21K-021-161-00W2
M83513 / 03-C02N	MM-212-021-161-00W2
M83513 / 03-C02P	MM-215-021-161-00W2
M83513 / 03-C02T	MM-21T-021-161-00W2
M83513 / 03-C03A	MM-21A-021-161-00V1
M83513 / 03-C03C	MM-213-021-161-00V1
M83513 / 03-C03K	MM-21K-021-161-00V1
M83513 / 03-C03N	MM-212-021-161-00V1
M83513 / 03-C03P	MM-215-021-161-00V1
M83513 / 03-C03T	MM-21T-021-161-00V1
M83513 / 03-C04A	MM-21A-021-161-00V2
M83513 / 03-C04C	MM-213-021-161-00V2
M83513 / 03-C04K	MM-21K-021-161-00V2
M83513 / 03-C04N	MM-212-021-161-00V2
M83513 / 03-C04P	MM-215-021-161-00V2
M83513 / 03-C04T	MM-21T-021-161-00V2
M83513 / 03-C05A	MM-21A-021-143-0000
M83513 / 03-C05C	MM-213-021-143-0000
M83513 / 03-C05K	MM-21K-021-143-0000
M83513 / 03-C05N	MM-212-021-143-0000
M83513 / 03-C05P	MM-215-021-143-0000
M83513 / 03-C05T	MM-21T-021-143-0000
M83513 / 03-C06A	MM-21A-021-153-0000
M83513 / 03-C06C	MM-213-021-153-0000
M83513 / 03-C06K	MM-21K-021-153-0000
M83513 / 03-C06N	MM-212-021-153-0000
M83513 / 03-C06P	MM-215-021-153-0000
M83513 / 03-C06T	MM-21T-021-153-0000
M83513 / 03-C07A	MM-21A-021-145-0000
M83513 / 03-C07C	MM-213-021-145-0000
M83513 / 03-C07K	MM-21K-021-145-0000
M83513 / 03-C07N	MM-212-021-145-0000
M83513 / 03-C07P	MM-215-021-145-0000
M83513 / 03-C07T	MM-21T-021-145-0000

AirBorn

Military Cross Reference Chart

-- Continued from previous page

M83513 / 03 (continued)

M83513 / 03-F08C	MM-213-037-155-0000
M83513 / 03-F08N	MM-212-037-155-0000
M83513 / 03-F08P	MM-215-037-155-0000
M83513 / 03-F09C	MM-213-037-161-00Y1
M83513 / 03-F09N	MM-212-037-161-00Y1
M83513 / 03-F09P	MM-215-037-161-00Y1
M83513 / 03-F10C	MM-213-037-161-00Y2
M83513 / 03-F10N	MM-212-037-161-00Y2
M83513 / 03-F10P	MM-215-037-161-00Y2
M83513 / 03-F11C	MM-213-037-161-00Y3
M83513 / 03-F11N	MM-212-037-161-00Y3
M83513 / 03-F11P	MM-215-037-161-00Y3
M83513 / 03-F12C	MM-213-037-161-00Y4
M83513 / 03-F12N	MM-212-037-161-00Y4
M83513 / 03-F12P	MM-215-037-161-00Y4
M83513 / 03-F13C	MM-213-037-161-00Y5
M83513 / 03-F13N	MM-212-037-161-00Y5
M83513 / 03-F13P	MM-215-037-161-00Y5
M83513 / 03-F14C	MM-213-037-161-00Y6
M83513 / 03-F14N	MM-212-037-161-00Y6
M83513 / 03-F14P	MM-215-037-161-00Y6
M83513 / 03-F15C	MM-213-037-161-00Y7
M83513 / 03-F15N	MM-212-037-161-00Y7
M83513 / 03-F15P	MM-215-037-161-00Y7
M83513 / 03-F16C	MM-213-037-161-00Y8
M83513 / 03-F16N	MM-212-037-161-00Y8
M83513 / 03-F16P	MM-215-037-161-00Y8
M83513 / 03-G01C	MM-313-051-161-00W1
M83513 / 03-G01N	MM-312-051-161-00W1
M83513 / 03-G01P	MM-315-051-161-00W1
M83513 / 03-G02C	MM-313-051-161-00W2
M83513 / 03-G02N	MM-312-051-161-00W2
M83513 / 03-G02P	MM-315-051-161-00W2
M83513 / 03-G03C	MM-313-051-161-00V1
M83513 / 03-G03N	MM-312-051-161-00V1
M83513 / 03-G03P	MM-315-051-161-00V1
M83513 / 03-G04C	MM-313-051-161-00V2
M83513 / 03-G04N	MM-312-051-161-00V2
M83513 / 03-G04P	MM-315-051-161-00V2
M83513 / 03-G05C	MM-313-051-143-0000
M83513 / 03-G05N	MM-312-051-143-0000
M83513 / 03-G05P	MM-315-051-143-0000
M83513 / 03-G06C	MM-313-051-153-0000
M83513 / 03-G06N	MM-312-051-153-0000
M83513 / 03-G06P	MM-315-051-153-0000
M83513 / 03-G07C	MM-313-051-145-0000
M83513 / 03-G07N	MM-312-051-145-0000
M83513 / 03-G07P	MM-315-051-145-0000
M83513 / 03-G08C	MM-313-051-155-0000
M83513 / 03-G08N	MM-312-051-155-0000
M83513 / 03-G08P	MM-315-051-155-0000
M83513 / 03-G09C	MM-313-051-161-00Y1
M83513 / 03-G09N	MM-312-051-161-00Y1
M83513 / 03-G09P	MM-315-051-161-00Y1
M83513 / 03-G10C	MM-313-051-161-00Y2
M83513 / 03-G10N	MM-312-051-161-00Y2
M83513 / 03-G10P	MM-315-051-161-00Y2
M83513 / 03-G11C	MM-313-051-161-00Y3
M83513 / 03-G11N	MM-312-051-161-00Y3
M83513 / 03-G11P	MM-315-051-161-00Y3
M83513 / 03-G12C	MM-313-051-161-00Y4
M83513 / 03-G12N	MM-312-051-161-00Y4
M83513 / 03-G12P	MM-315-051-161-00Y4
M83513 / 03-G13C	MM-313-051-161-00Y5
M83513 / 03-G13N	MM-312-051-161-00Y5
M83513 / 03-G13P	MM-315-051-161-00Y5
M83513 / 03-G14C	MM-313-051-161-00Y6
M83513 / 03-G14N	MM-312-051-161-00Y6
M83513 / 03-G14P	MM-315-051-161-00Y6
M83513 / 03-G15C	MM-313-051-161-00Y7
M83513 / 03-G15N	MM-312-051-161-00Y7
M83513 / 03-G15P	MM-315-051-161-00Y7
M83513 / 03-G16C	MM-313-051-161-00Y8
M83513 / 03-G16N	MM-312-051-161-00Y8
M83513 / 03-G16P	MM-315-051-161-00Y8
M83513 / 03-H01C	MM-413-100-161-00W1
M83513 / 03-H01N	MM-412-100-161-00W1
M83513 / 03-H01P	MM-415-100-161-00W1
M83513 / 03-H02C	MM-413-100-161-00W2
M83513 / 03-H02N	MM-412-100-161-00W2
M83513 / 03-H02P	MM-415-100-161-00W2
M83513 / 03-H03C	MM-413-100-161-00V1
M83513 / 03-H03N	MM-412-100-161-00V1
M83513 / 03-H03P	MM-415-100-161-00V1
M83513 / 03-H04C	MM-413-100-161-00V2
M83513 / 03-H04N	MM-412-100-161-00V2
M83513 / 03-H04P	MM-415-100-161-00V2
M83513 / 03-H05C	MM-413-100-143-0000
M83513 / 03-H05N	MM-412-100-143-0000
M83513 / 03-H05P	MM-415-100-143-0000
M83513 / 03-H06C	MM-413-100-153-0000
M83513 / 03-H06N	MM-412-100-153-0000
M83513 / 03-H06P	MM-415-100-153-0000
M83513 / 03-H07C	MM-413-100-145-0000
M83513 / 03-H07N	MM-412-100-145-0000
M83513 / 03-H07P	MM-415-100-145-0000
M83513 / 03-H08C	MM-413-100-155-0000
M83513 / 03-H08N	MM-412-100-155-0000
M83513 / 03-H08P	MM-415-100-155-0000
M83513 / 03-H09C	MM-413-100-161-00Y1
M83513 / 03-H09N	MM-412-100-161-00Y1
M83513 / 03-H09P	MM-415-100-161-00Y1
M83513 / 03-H10C	MM-413-100-161-00Y2
M83513 / 03-H10N	MM-412-100-161-00Y2
M83513 / 03-H10P	MM-415-100-161-00Y2
M83513 / 03-H11C	MM-413-100-161-00Y3
M83513 / 03-H11N	MM-412-100-161-00Y3
M83513 / 03-H11P	MM-415-100-161-00Y3
M83513 / 03-H12C	MM-413-100-161-00Y4
M83513 / 03-H12N	MM-412-100-161-00Y4
M83513 / 03-H12P	MM-415-100-161-00Y4
M83513 / 03-H13C	MM-413-100-161-00Y5
M83513 / 03-H13N	MM-412-100-161-00Y5
M83513 / 03-H13P	MM-415-100-161-00Y5
M83513 / 03-H14C	MM-413-100-161-00Y6
M83513 / 03-H14N	MM-412-100-161-00Y6
M83513 / 03-H14P	MM-415-100-161-00Y6
M83513 / 03-H15C	MM-413-100-161-00Y7
M83513 / 03-H15N	MM-412-100-161-00Y7
M83513 / 03-H15P	MM-415-100-161-00Y7
M83513 / 03-H16C	MM-413-100-161-00Y8
M83513 / 03-H16N	MM-412-100-161-00Y8
M83513 / 03-H16P	MM-415-100-161-00Y8

M83513 / 04

M83513 / 04-A01C	MM-223-009-261-00W1-900
M83513 / 04-A01N	MM-222-009-261-00W1-900
M83513 / 04-A01P	MM-225-009-261-00W1-900
M83513 / 04-A02C	MM-223-009-261-00W2-900
M83513 / 04-A02N	MM-222-009-261-00W2-900
M83513 / 04-A02P	MM-225-009-261-00W2-900
M83513 / 04-A03C	MM-223-009-261-00V1-900
M83513 / 04-A03N	MM-222-009-261-00V1-900
M83513 / 04-A03P	MM-225-009-261-00V1-900
M83513 / 04-A04C	MM-223-009-261-00V2-900
M83513 / 04-A04N	MM-222-009-261-00V2-900
M83513 / 04-A04P	MM-225-009-261-00V2-900
M83513 / 04-A05C	MM-223-009-243-0000-900
M83513 / 04-A05N	MM-222-009-243-0000-900
M83513 / 04-A05P	MM-225-009-243-0000-900
M83513 / 04-A06C	MM-223-009-253-0000-900
M83513 / 04-A06N	MM-222-009-253-0000-900
M83513 / 04-A06P	MM-225-009-253-0000-900
M83513 / 04-A07C	MM-223-009-245-0000-900
M83513 / 04-A07N	MM-222-009-245-0000-900
M83513 / 04-A07P	MM-225-009-245-0000-900
M83513 / 04-A08C	MM-223-009-255-0000-900
M83513 / 04-A08N	MM-222-009-255-0000-900
M83513 / 04-A08P	MM-225-009-255-0000-900
M83513 / 04-A09C	MM-223-009-261-00Y1-900
M83513 / 04-A09N	MM-222-009-261-00Y1-900
M83513 / 04-A09P	MM-225-009-261-00Y1-900
M83513 / 04-A10C	MM-223-009-261-00Y2-900
M83513 / 04-A10N	MM-222-009-261-00Y2-900
M83513 / 04-A10P	MM-225-009-261-00Y2-900
M83513 / 04-A11C	MM-223-009-261-00Y3-900
M83513 / 04-A11N	MM-222-009-261-00Y3-900
M83513 / 04-A11P	MM-225-009-261-00Y3-900
M83513 / 04-A12C	MM-223-009-261-00Y4-900
M83513 / 04-A12N	MM-222-009-261-00Y4-900
M83513 / 04-A12P	MM-225-009-261-00Y4-900

Military Cross Reference Chart

-- Continued from previous page

M83513 / 04 (continued)

M83513 / 04-A13C	MM-223-009-261-00Y5-900
M83513 / 04-A13N	MM-222-009-261-00Y5-900
M83513 / 04-A13P	MM-225-009-261-00Y5-900
M83513 / 04-A14C	MM-223-009-261-00Y6-900
M83513 / 04-A14N	MM-222-009-261-00Y6-900
M83513 / 04-A14P	MM-225-009-261-00Y6-900
M83513 / 04-A15C	MM-223-009-261-00Y7-900
M83513 / 04-A15N	MM-222-009-261-00Y7-900
M83513 / 04-A15P	MM-225-009-261-00Y7-900
M83513 / 04-A16C	MM-223-009-261-00Y8-900
M83513 / 04-A16N	MM-222-009-261-00Y8-900
M83513 / 04-A16P	MM-225-009-261-00Y8-900
M83513 / 04-B01C	MM-223-015-261-00W1-900
M83513 / 04-B01N	MM-222-015-261-00W1-900
M83513 / 04-B01P	MM-225-015-261-00W1-900
M83513 / 04-B02C	MM-223-015-261-00W2-900
M83513 / 04-B02N	MM-222-015-261-00W2-900
M83513 / 04-B02P	MM-225-015-261-00W2-900
M83513 / 04-B03C	MM-223-015-261-00V1-900
M83513 / 04-B03N	MM-222-015-261-00V1-900
M83513 / 04-B03P	MM-225-015-261-00V1-900
M83513 / 04-B04C	MM-223-015-261-00V2-900
M83513 / 04-B04N	MM-222-015-261-00V2-900
M83513 / 04-B04P	MM-225-015-261-00V2-900
M83513 / 04-B05C	MM-223-015-243-0000-900
M83513 / 04-B05N	MM-222-015-243-0000-900
M83513 / 04-B05P	MM-225-015-243-0000-900
M83513 / 04-B06C	MM-223-015-253-0000-900
M83513 / 04-B06N	MM-222-015-253-0000-900
M83513 / 04-B06P	MM-225-015-253-0000-900
M83513 / 04-B07C	MM-223-015-245-0000-900
M83513 / 04-B07N	MM-222-015-245-0000-900
M83513 / 04-B07P	MM-225-015-245-0000-900
M83513 / 04-B08C	MM-223-015-255-0000-900
M83513 / 04-B08N	MM-222-015-255-0000-900
M83513 / 04-B08P	MM-225-015-255-0000-900
M83513 / 04-B09C	MM-223-015-261-00Y1-900
M83513 / 04-B09N	MM-222-015-261-00Y1-900
M83513 / 04-B09P	MM-225-015-261-00Y1-900
M83513 / 04-B10C	MM-223-015-261-00Y2-900
M83513 / 04-B10N	MM-222-015-261-00Y2-900
M83513 / 04-B10P	MM-225-015-261-00Y2-900
M83513 / 04-B11C	MM-223-015-261-00Y3-900
M83513 / 04-B11N	MM-222-015-261-00Y3-900
M83513 / 04-B11P	MM-225-015-261-00Y3-900
M83513 / 04-B12C	MM-223-015-261-00Y4-900
M83513 / 04-B12N	MM-222-015-261-00Y4-900
M83513 / 04-B12P	MM-225-015-261-00Y4-900
M83513 / 04-B13C	MM-223-015-261-00Y5-900
M83513 / 04-B13N	MM-222-015-261-00Y5-900
M83513 / 04-B13P	MM-225-015-261-00Y5-900
M83513 / 04-B14C	MM-223-015-261-00Y6-900
M83513 / 04-B14N	MM-222-015-261-00Y6-900
M83513 / 04-B14P	MM-225-015-261-00Y6-900
M83513 / 04-B15C	MM-223-015-261-00Y7-900
M83513 / 04-B15N	MM-222-015-261-00Y7-900
M83513 / 04-B15P	MM-225-015-261-00Y7-900
M83513 / 04-B16C	MM-223-015-261-00Y8-900
M83513 / 04-B16N	MM-222-015-261-00Y8-900
M83513 / 04-B16P	MM-225-015-261-00Y8-900
M83513 / 04-C01C	MM-223-021-261-00W1-900
M83513 / 04-C01N	MM-222-021-261-00W1-900
M83513 / 04-C01P	MM-225-021-261-00W1-900
M83513 / 04-C02C	MM-223-021-261-00W2-900
M83513 / 04-C02N	MM-222-021-261-00W2-900
M83513 / 04-C02P	MM-225-021-261-00W2-900
M83513 / 04-C03C	MM-223-021-261-00V1-900
M83513 / 04-C03N	MM-222-021-261-00V1-900
M83513 / 04-C03P	MM-225-021-261-00V1-900
M83513 / 04-C04C	MM-223-021-261-00V2-900
M83513 / 04-C04N	MM-222-021-261-00V2-900
M83513 / 04-C04P	MM-225-021-261-00V2-900
M83513 / 04-C05C	MM-223-021-243-0000-900
M83513 / 04-C05N	MM-222-021-243-0000-900
M83513 / 04-C05P	MM-225-021-243-0000-900
M83513 / 04-C06C	MM-223-021-253-0000-900
M83513 / 04-C06N	MM-222-021-253-0000-900
M83513 / 04-C06P	MM-225-021-253-0000-900
M83513 / 04-C07C	MM-223-021-245-0000-900
M83513 / 04-C07N	MM-222-021-245-0000-900
M83513 / 04-C07P	MM-225-021-245-0000-900
M83513 / 04-C08C	MM-223-021-255-0000-900
M83513 / 04-C08N	MM-222-021-255-0000-900
M83513 / 04-C08P	MM-225-021-255-0000-900
M83513 / 04-C09C	MM-223-021-261-00Y1-900
M83513 / 04-C09N	MM-222-021-261-00Y1-900
M83513 / 04-C09P	MM-225-021-261-00Y1-900
M83513 / 04-C10C	MM-223-021-261-00Y2-900
M83513 / 04-C10N	MM-222-021-261-00Y2-900
M83513 / 04-C10P	MM-225-021-261-00Y2-900
M83513 / 04-C11C	MM-223-021-261-00Y3-900
M83513 / 04-C11N	MM-222-021-261-00Y3-900
M83513 / 04-C11P	MM-225-021-261-00Y3-900
M83513 / 04-C12C	MM-223-021-261-00Y4-900
M83513 / 04-C12N	MM-222-021-261-00Y4-900
M83513 / 04-C12P	MM-225-021-261-00Y4-900
M83513 / 04-C13C	MM-223-021-261-00Y5-900
M83513 / 04-C13N	MM-222-021-261-00Y5-900
M83513 / 04-C13P	MM-225-021-261-00Y5-900
M83513 / 04-C14C	MM-223-021-261-00Y6-900
M83513 / 04-C14N	MM-222-021-261-00Y6-900
M83513 / 04-C14P	MM-225-021-261-00Y6-900
M83513 / 04-C15C	MM-223-021-261-00Y7-900
M83513 / 04-C15N	MM-222-021-261-00Y7-900
M83513 / 04-C15P	MM-225-021-261-00Y7-900
M83513 / 04-C16C	MM-223-021-261-00Y8-900
M83513 / 04-C16N	MM-222-021-261-00Y8-900
M83513 / 04-C16P	MM-225-021-261-00Y8-900
M83513 / 04-D01C	MM-223-025-261-00W1-900
M83513 / 04-D01N	MM-222-025-261-00W1-900
M83513 / 04-D01P	MM-225-025-261-00W1-900
M83513 / 04-D02C	MM-223-025-261-00W2-900
M83513 / 04-D02N	MM-222-025-261-00W2-900
M83513 / 04-D02P	MM-225-025-261-00W2-900
M83513 / 04-D03C	MM-223-025-261-00V1-900
M83513 / 04-D03N	MM-222-025-261-00V1-900
M83513 / 04-D03P	MM-225-025-261-00V1-900
M83513 / 04-D04C	MM-223-025-261-00V2-900
M83513 / 04-D04N	MM-222-025-261-00V2-900
M83513 / 04-D04P	MM-225-025-261-00V2-900
M83513 / 04-D05C	MM-223-025-243-0000-900
M83513 / 04-D05N	MM-222-025-243-0000-900
M83513 / 04-D05P	MM-225-025-243-0000-900
M83513 / 04-D06C	MM-223-025-253-0000-900
M83513 / 04-D06N	MM-222-025-253-0000-900
M83513 / 04-D06P	MM-225-025-253-0000-900
M83513 / 04-D07C	MM-223-025-245-0000-900
M83513 / 04-D07N	MM-222-025-245-0000-900
M83513 / 04-D07P	MM-225-025-245-0000-900
M83513 / 04-D08C	MM-223-025-255-0000-900
M83513 / 04-D08N	MM-222-025-255-0000-900
M83513 / 04-D08P	MM-225-025-255-0000-900
M83513 / 04-D09C	MM-223-025-261-00Y1-900
M83513 / 04-D09N	MM-222-025-261-00Y1-900
M83513 / 04-D09P	MM-225-025-261-00Y1-900
M83513 / 04-D10C	MM-223-025-261-00Y2-900
M83513 / 04-D10N	MM-222-025-261-00Y2-900
M83513 / 04-D10P	MM-225-025-261-00Y2-900
M83513 / 04-D11C	MM-223-025-261-00Y3-900
M83513 / 04-D11N	MM-222-025-261-00Y3-900
M83513 / 04-D11P	MM-225-025-261-00Y3-900
M83513 / 04-D12C	MM-223-025-261-00Y4-900
M83513 / 04-D12N	MM-222-025-261-00Y4-900
M83513 / 04-D12P	MM-225-025-261-00Y4-900
M83513 / 04-D13C	MM-223-025-261-00Y5-900
M83513 / 04-D13N	MM-222-025-261-00Y5-900
M83513 / 04-D13P	MM-225-025-261-00Y5-900
M83513 / 04-D14C	MM-223-025-261-00Y6-900
M83513 / 04-D14N	MM-222-025-261-00Y6-900
M83513 / 04-D14P	MM-225-025-261-00Y6-900
M83513 / 04-D15C	MM-223-025-261-00Y7-900
M83513 / 04-D15N	MM-222-025-261-00Y7-900
M83513 / 04-D15P	MM-225-025-261-00Y7-900
M83513 / 04-D16C	MM-223-025-261-00Y8-900
M83513 / 04-D16N	MM-222-025-261-00Y8-900
M83513 / 04-D16P	MM-225-025-261-00Y8-900
M83513 / 04-E01C	MM-223-031-261-00W1-900
M83513 / 04-E01N	MM-222-031-261-00W1-900
M83513 / 04-E01P	MM-225-031-261-00W1-900
M83513 / 04-E02C	MM-223-031-261-00W2-900
M83513 / 04-E02N	MM-222-031-261-00W2-900
M83513 / 04-E02P	MM-225-031-261-00W2-900

AirBorn

Military Cross Reference Chart

-- Continued from previous page

M83513 / 04 (continued)

M83513 / 04-E03C	MM-223-031-261-00V1-900
M83513 / 04-E03N	MM-222-031-261-00V1-900
M83513 / 04-E03P	MM-225-031-261-00V1-900
M83513 / 04-E04C	MM-223-031-261-00V2-900
M83513 / 04-E04N	MM-222-031-261-00V2-900
M83513 / 04-E04P	MM-225-031-261-00V2-900
M83513 / 04-E05C	MM-223-031-243-0000-900
M83513 / 04-E05N	MM-222-031-243-0000-900
M83513 / 04-E05P	MM-225-031-243-0000-900
M83513 / 04-E06C	MM-223-031-253-0000-900
M83513 / 04-E06N	MM-222-031-253-0000-900
M83513 / 04-E06P	MM-225-031-253-0000-900
M83513 / 04-E07C	MM-223-031-245-0000-900
M83513 / 04-E07N	MM-222-031-245-0000-900
M83513 / 04-E07P	MM-225-031-245-0000-900
M83513 / 04-E08C	MM-223-031-255-0000-900
M83513 / 04-E08N	MM-222-031-255-0000-900
M83513 / 04-E08P	MM-225-031-255-0000-900
M83513 / 04-E09C	MM-223-031-261-00Y1-900
M83513 / 04-E09N	MM-222-031-261-00Y1-900
M83513 / 04-E09P	MM-225-031-261-00Y1-900
M83513 / 04-E10C	MM-223-031-261-00Y2-900
M83513 / 04-E10N	MM-222-031-261-00Y2-900
M83513 / 04-E10P	MM-225-031-261-00Y2-900
M83513 / 04-E11C	MM-223-031-261-00Y3-900
M83513 / 04-E11N	MM-222-031-261-00Y3-900
M83513 / 04-E11P	MM-225-031-261-00Y3-900
M83513 / 04-E12C	MM-223-031-261-00Y4-900
M83513 / 04-E12N	MM-222-031-261-00Y4-900
M83513 / 04-E12P	MM-225-031-261-00Y4-900
M83513 / 04-E13C	MM-223-031-261-00Y5-900
M83513 / 04-E13N	MM-222-031-261-00Y5-900
M83513 / 04-E13P	MM-225-031-261-00Y5-900
M83513 / 04-E14C	MM-223-031-261-00Y6-900
M83513 / 04-E14N	MM-222-031-261-00Y6-900
M83513 / 04-E14P	MM-225-031-261-00Y6-900
M83513 / 04-E15C	MM-223-031-261-00Y7-900
M83513 / 04-E15N	MM-222-031-261-00Y7-900
M83513 / 04-E15P	MM-225-031-261-00Y7-900
M83513 / 04-E16C	MM-223-031-261-00Y8-900
M83513 / 04-E16N	MM-222-031-261-00Y8-900
M83513 / 04-E16P	MM-225-031-261-00Y8-900
M83513 / 04-F01C	MM-223-037-261-00W1-900
M83513 / 04-F01N	MM-222-037-261-00W1-900
M83513 / 04-F01P	MM-225-037-261-00W1-900
M83513 / 04-F02C	MM-223-037-261-00W2-900
M83513 / 04-F02N	MM-222-037-261-00W2-900
M83513 / 04-F02P	MM-225-037-261-00W2-900
M83513 / 04-F03C	MM-223-037-261-00V1-900
M83513 / 04-F03N	MM-222-037-261-00V1-900
M83513 / 04-F03P	MM-225-037-261-00V1-900
M83513 / 04-F04C	MM-223-037-261-00V2-900
M83513 / 04-F04N	MM-222-037-261-00V2-900
M83513 / 04-F04P	MM-225-037-261-00V2-900
M83513 / 04-F05C	MM-223-037-243-0000-900
M83513 / 04-F05N	MM-222-037-243-0000-900
M83513 / 04-F05P	MM-225-037-243-0000-900
M83513 / 04-F06C	MM-223-037-253-0000-900
M83513 / 04-F06N	MM-222-037-253-0000-900
M83513 / 04-F06P	MM-225-037-253-0000-900
M83513 / 04-F07C	MM-223-037-245-0000-900
M83513 / 04-F07N	MM-222-037-245-0000-900
M83513 / 04-F07P	MM-225-037-245-0000-900
M83513 / 04-F08C	MM-223-037-255-0000-900
M83513 / 04-F08N	MM-222-037-255-0000-900
M83513 / 04-F08P	MM-225-037-255-0000-900
M83513 / 04-F09C	MM-223-037-261-00Y1-900
M83513 / 04-F09N	MM-222-037-261-00Y1-900
M83513 / 04-F09P	MM-225-037-261-00Y1-900
M83513 / 04-F10C	MM-223-037-261-00Y2-900
M83513 / 04-F10N	MM-222-037-261-00Y2-900
M83513 / 04-F10P	MM-225-037-261-00Y2-900
M83513 / 04-F11C	MM-223-037-261-00Y3-900
M83513 / 04-F11N	MM-222-037-261-00Y3-900
M83513 / 04-F11P	MM-225-037-261-00Y3-900
M83513 / 04-F12C	MM-223-037-261-00Y4-900
M83513 / 04-F12N	MM-222-037-261-00Y4-900
M83513 / 04-F12P	MM-225-037-261-00Y4-900
M83513 / 04-F13C	MM-223-037-261-00Y5-900
M83513 / 04-F13N	MM-222-037-261-00Y5-900
M83513 / 04-F13P	MM-225-037-261-00Y5-900
M83513 / 04-F14C	MM-223-037-261-00Y6-900
M83513 / 04-F14N	MM-222-037-261-00Y6-900
M83513 / 04-F14P	MM-225-037-261-00Y6-900
M83513 / 04-F15C	MM-223-037-261-00Y7-900
M83513 / 04-F15N	MM-222-037-261-00Y7-900
M83513 / 04-F15P	MM-225-037-261-00Y7-900
M83513 / 04-F16C	MM-223-037-261-00Y8-900
M83513 / 04-F16N	MM-222-037-261-00Y8-900
M83513 / 04-F16P	MM-225-037-261-00Y8-900
M83513 / 04-G01C	MM-323-051-261-00W1-900
M83513 / 04-G01N	MM-322-051-261-00W1-900
M83513 / 04-G01P	MM-325-051-261-00W1-900
M83513 / 04-G02C	MM-323-051-261-00W2-900
M83513 / 04-G02N	MM-322-051-261-00W2-900
M83513 / 04-G02P	MM-325-051-261-00W2-900
M83513 / 04-G03C	MM-323-051-261-00V1-900
M83513 / 04-G03N	MM-322-051-261-00V1-900
M83513 / 04-G03P	MM-325-051-261-00V1-900
M83513 / 04-G04C	MM-323-051-261-00V2-900
M83513 / 04-G04N	MM-322-051-261-00V2-900
M83513 / 04-G04P	MM-325-051-261-00V2-900
M83513 / 04-G05C	MM-323-051-243-0000-900
M83513 / 04-G05N	MM-322-051-243-0000-900
M83513 / 04-G05P	MM-325-051-243-0000-900
M83513 / 04-G06C	MM-323-051-253-0000-900
M83513 / 04-G06N	MM-322-051-253-0000-900
M83513 / 04-G06P	MM-325-051-253-0000-900
M83513 / 04-G07C	MM-323-051-245-0000-900
M83513 / 04-G07N	MM-322-051-245-0000-900
M83513 / 04-G07P	MM-325-051-245-0000-900
M83513 / 04-G08C	MM-323-051-255-0000-900
M83513 / 04-G08N	MM-322-051-255-0000-900
M83513 / 04-G08P	MM-325-051-255-0000-900
M83513 / 04-G09C	MM-323-051-261-00Y1-900
M83513 / 04-G09N	MM-322-051-261-00Y1-900
M83513 / 04-G09P	MM-325-051-261-00Y1-900
M83513 / 04-G10C	MM-323-051-261-00Y2-900
M83513 / 04-G10N	MM-322-051-261-00Y2-900
M83513 / 04-G10P	MM-325-051-261-00Y2-900
M83513 / 04-G11C	MM-323-051-261-00Y3-900
M83513 / 04-G11N	MM-322-051-261-00Y3-900
M83513 / 04-G11P	MM-325-051-261-00Y3-900
M83513 / 04-G12C	MM-323-051-261-00Y4-900
M83513 / 04-G12N	MM-322-051-261-00Y4-900
M83513 / 04-G12P	MM-325-051-261-00Y4-900
M83513 / 04-G13C	MM-323-051-261-00Y5-900
M83513 / 04-G13N	MM-322-051-261-00Y5-900
M83513 / 04-G13P	MM-325-051-261-00Y5-900
M83513 / 04-G14C	MM-323-051-261-00Y6-900
M83513 / 04-G14N	MM-322-051-261-00Y6-900
M83513 / 04-G14P	MM-325-051-261-00Y6-900
M83513 / 04-G15C	MM-323-051-261-00Y7-900
M83513 / 04-G15N	MM-322-051-261-00Y7-900
M83513 / 04-G15P	MM-325-051-261-00Y7-900
M83513 / 04-G16C	MM-323-051-261-00Y8-900
M83513 / 04-G16N	MM-322-051-261-00Y8-900
M83513 / 04-G16P	MM-325-051-261-00Y8-900
M83513 / 04-H01C	MM-423-100-261-00W1-900
M83513 / 04-H01N	MM-422-100-261-00W1-900
M83513 / 04-H01P	MM-425-100-261-00W1-900
M83513 / 04-H02C	MM-423-100-261-00W2-900
M83513 / 04-H02N	MM-422-100-261-00W2-900
M83513 / 04-H02P	MM-425-100-261-00W2-900
M83513 / 04-H03C	MM-423-100-261-00V1-900
M83513 / 04-H03N	MM-422-100-261-00V1-900
M83513 / 04-H03P	MM-425-100-261-00V1-900
M83513 / 04-H04C	MM-423-100-261-00V2-900
M83513 / 04-H04N	MM-422-100-261-00V2-900
M83513 / 04-H04P	MM-425-100-261-00V2-900
M83513 / 04-H05C	MM-423-100-243-0000-900
M83513 / 04-H05N	MM-422-100-243-0000-900
M83513 / 04-H05P	MM-425-100-243-0000-900
M83513 / 04-H06C	MM-423-100-253-0000-900
M83513 / 04-H06N	MM-422-100-253-0000-900
M83513 / 04-H06P	MM-425-100-253-0000-900
M83513 / 04-H07C	MM-423-100-245-0000-900
M83513 / 04-H07N	MM-422-100-245-0000-900
M83513 / 04-H07P	MM-425-100-245-0000-900
M83513 / 04-H08C	MM-423-100-255-0000-900
M83513 / 04-H08N	MM-422-100-255-0000-900
M83513 / 04-H08P	MM-425-100-255-0000-900

Military Cross Reference Chart

-- Continued from previous page

M83513 / 04 (continued)

M83513 / 04-H09C	MM-423-100-261-00Y1-900	M83513 / 04-H11P	MM-425-100-261-00Y3-900	M83513 / 04-H14N	MM-422-100-261-00Y6-900
M83513 / 04-H09N	MM-422-100-261-00Y1-900	M83513 / 04-H12C	MM-423-100-261-00Y4-900	M83513 / 04-H14P	MM-425-100-261-00Y6-900
M83513 / 04-H09P	MM-425-100-261-00Y1-900	M83513 / 04-H12N	MM-422-100-261-00Y4-900	M83513 / 04-H15C	MM-423-100-261-00Y7-900
M83513 / 04-H10C	MM-423-100-261-00Y2-900	M83513 / 04-H12P	MM-425-100-261-00Y4-900	M83513 / 04-H15N	MM-422-100-261-00Y7-900
M83513 / 04-H10N	MM-422-100-261-00Y2-900	M83513 / 04-H13C	MM-423-100-261-00Y5-900	M83513 / 04-H15P	MM-425-100-261-00Y7-900
M83513 / 04-H10P	MM-425-100-261-00Y2-900	M83513 / 04-H13N	MM-422-100-261-00Y5-900	M83513 / 04-H16C	MM-423-100-261-00Y8-900
M83513 / 04-H11C	MM-423-100-261-00Y3-900	M83513 / 04-H13P	MM-425-100-261-00Y5-900	M83513 / 04-H16N	MM-422-100-261-00Y8-900
M83513 / 04-H11N	MM-422-100-261-00Y3-900	M83513 / 04-H14C	MM-423-100-261-00Y6-900	M83513 / 04-H16P	MM-425-100-261-00Y8-900

M83513 / 05

M83513 / 05-02	00-000-000-000-4100
M83513 / 05-03	00-000-000-000-4200
M83513 / 05-05	00-000-000-000-4300
M83513 / 05-06	00-000-000-000-4400
M83513 / 05-07	00-000-000-000-2200
M83513 / 05-12	00-000-000-000-8100
M83513 / 05-13	00-000-000-000-8200
M83513 / 05-15	00-000-000-000-8300
M83513 / 05-16	00-000-000-000-8400
M83513 / 05-17	00-000-000-000-6200

M83513 / 06

M83513 / 06-A	MP-211-009-113-0000
M83513 / 06-B	MP-211-015-113-0000
M83513 / 06-C	MP-211-021-113-0000
M83513 / 06-D	MP-211-025-113-0000
M83513 / 06-E	MP-211-031-113-0000
M83513 / 06-F	MP-211-037-113-0000
M83513 / 06-G	MP-311-051-113-0000

M83513 / 07

M83513 / 07-A	MP-221-009-213-0000
M83513 / 07-B	MP-221-015-213-0000
M83513 / 07-C	MP-221-021-213-0000
M83513 / 07-D	MP-221-025-213-0000
M83513 / 07-E	MP-221-031-213-0000
M83513 / 07-F	MP-221-037-213-0000
M83513 / 07-G	MP-321-051-213-0000

M83513 / 08

M83513 / 08-A01	MP-211-009-161-00W1	M83513 / 08-C01	MP-211-021-161-00W1	M83513 / 08-E01	MP-211-031-161-00W1
M83513 / 08-A02	MP-211-009-161-00W2	M83513 / 08-C02	MP-211-021-161-00W2	M83513 / 08-E02	MP-211-031-161-00W2
M83513 / 08-A03	MP-211-009-161-00V1	M83513 / 08-C03	MP-211-021-161-00V1	M83513 / 08-E03	MP-211-031-161-00V1
M83513 / 08-A04	MP-211-009-161-00V2	M83513 / 08-C04	MP-211-021-161-00V2	M83513 / 08-E04	MP-211-031-161-00V2
M83513 / 08-A05	MP-211-009-143-0000	M83513 / 08-C05	MP-211-021-143-0000	M83513 / 08-E05	MP-211-031-143-0000
M83513 / 08-A06	MP-211-009-153-0000	M83513 / 08-C06	MP-211-021-153-0000	M83513 / 08-E06	MP-211-031-153-0000
M83513 / 08-A07	MP-211-009-145-0000	M83513 / 08-C07	MP-211-021-145-0000	M83513 / 08-E07	MP-211-031-145-0000
M83513 / 08-A08	MP-211-009-155-0000	M83513 / 08-C08	MP-211-021-155-0000	M83513 / 08-E08	MP-211-031-155-0000
M83513 / 08-A09	MP-211-009-161-00Y1	M83513 / 08-C09	MP-211-021-161-00Y1	M83513 / 08-E09	MP-211-031-161-00Y1
M83513 / 08-A10	MP-211-009-161-00Y2	M83513 / 08-C10	MP-211-021-161-00Y2	M83513 / 08-E10	MP-211-031-161-00Y2
M83513 / 08-A11	MP-211-009-161-00Y3	M83513 / 08-C11	MP-211-021-161-00Y3	M83513 / 08-E11	MP-211-031-161-00Y3
M83513 / 08-A12	MP-211-009-161-00Y4	M83513 / 08-C12	MP-211-021-161-00Y4	M83513 / 08-E12	MP-211-031-161-00Y4
M83513 / 08-A13	MP-211-009-161-00Y5	M83513 / 08-C13	MP-211-021-161-00Y5	M83513 / 08-E13	MP-211-031-161-00Y5
M83513 / 08-A14	MP-211-009-161-00Y6	M83513 / 08-C14	MP-211-021-161-00Y6	M83513 / 08-E14	MP-211-031-161-00Y6
M83513 / 08-A15	MP-211-009-161-00Y7	M83513 / 08-C15	MP-211-021-161-00Y7	M83513 / 08-E15	MP-211-031-161-00Y7
M83513 / 08-A16	MP-211-009-161-00Y8	M83513 / 08-C16	MP-211-021-161-00Y8	M83513 / 08-E16	MP-211-031-161-00Y8
M83513 / 08-B01	MP-211-015-161-00W1	M83513 / 08-D01	MP-211-025-161-00W1	M83513 / 08-F01	MP-211-037-161-00W1
M83513 / 08-B02	MP-211-015-161-00W2	M83513 / 08-D02	MP-211-025-161-00W2	M83513 / 08-F02	MP-211-037-161-00W2
M83513 / 08-B03	MP-211-015-161-00V1	M83513 / 08-D03	MP-211-025-161-00V1	M83513 / 08-F03	MP-211-037-161-00V1
M83513 / 08-B04	MP-211-015-161-00V2	M83513 / 08-D04	MP-211-025-161-00V2	M83513 / 08-F04	MP-211-037-161-00V2
M83513 / 08-B05	MP-211-015-143-0000	M83513 / 08-D05	MP-211-025-143-0000	M83513 / 08-F05	MP-211-037-143-0000
M83513 / 08-B06	MP-211-015-153-0000	M83513 / 08-D06	MP-211-025-153-0000	M83513 / 08-F06	MP-211-037-153-0000
M83513 / 08-B07	MP-211-015-145-0000	M83513 / 08-D07	MP-211-025-145-0000	M83513 / 08-F07	MP-211-037-145-0000
M83513 / 08-B08	MP-211-015-155-0000	M83513 / 08-D08	MP-211-025-155-0000	M83513 / 08-F08	MP-211-037-155-0000
M83513 / 08-B09	MP-211-015-161-00Y1	M83513 / 08-D09	MP-211-025-161-00Y1	M83513 / 08-F09	MP-211-037-161-00Y1
M83513 / 08-B10	MP-211-015-161-00Y2	M83513 / 08-D10	MP-211-025-161-00Y2	M83513 / 08-F10	MP-211-037-161-00Y2
M83513 / 08-B11	MP-211-015-161-00Y3	M83513 / 08-D11	MP-211-025-161-00Y3	M83513 / 08-F11	MP-211-037-161-00Y3
M83513 / 08-B12	MP-211-015-161-00Y4	M83513 / 08-D12	MP-211-025-161-00Y4	M83513 / 08-F12	MP-211-037-161-00Y4
M83513 / 08-B13	MP-211-015-161-00Y5	M83513 / 08-D13	MP-211-025-161-00Y5	M83513 / 08-F13	MP-211-037-161-00Y5
M83513 / 08-B14	MP-211-015-161-00Y6	M83513 / 08-D14	MP-211-025-161-00Y6	M83513 / 08-F14	MP-211-037-161-00Y6
M83513 / 08-B15	MP-211-015-161-00Y7	M83513 / 08-D15	MP-211-025-161-00Y7	M83513 / 08-F15	MP-211-037-161-00Y7
M83513 / 08-B16	MP-211-015-161-00Y8	M83513 / 08-D16	MP-211-025-161-00Y8	M83513 / 08-F16	MP-211-037-161-00Y8

AirBorn

Military Cross Reference Chart

-- Continued from previous page

M83513 / 08 (continued)

M83513 / 08-G01	MP-311-051-161-00W1
M83513 / 08-G02	MP-311-051-161-00W2
M83513 / 08-G03	MP-311-051-161-00V1
M83513 / 08-G04	MP-311-051-161-00V2
M83513 / 08-G05	MP-311-051-143-0000
M83513 / 08-G06	MP-311-051-153-0000
M83513 / 08-G07	MP-311-051-145-0000
M83513 / 08-G08	MP-311-051-155-0000
M83513 / 08-G09	MP-311-051-161-00Y1
M83513 / 08-G10	MP-311-051-161-00Y2
M83513 / 08-G11	MP-311-051-161-00Y3
M83513 / 08-G12	MP-311-051-161-00Y4
M83513 / 08-G13	MP-311-051-161-00Y5
M83513 / 08-G14	MP-311-051-161-00Y6
M83513 / 08-G15	MP-311-051-161-00Y7
M83513 / 08-G16	MP-311-051-161-00Y8

M83513 / 09

M83513 / 09-A01	MP-221-009-261-00W1
M83513 / 09-A02	MP-221-009-261-00W2
M83513 / 09-A03	MP-221-009-261-00V1
M83513 / 09-A04	MP-221-009-261-00V2
M83513 / 09-A05	MP-221-009-243-0000
M83513 / 09-A06	MP-221-009-253-0000
M83513 / 09-A07	MP-221-009-245-0000
M83513 / 09-A08	MP-221-009-255-0000
M83513 / 09-A09	MP-221-009-261-00Y1
M83513 / 09-A10	MP-221-009-261-00Y2
M83513 / 09-A11	MP-221-009-261-00Y3
M83513 / 09-A12	MP-221-009-261-00Y4
M83513 / 09-A13	MP-221-009-261-00Y5
M83513 / 09-A14	MP-221-009-261-00Y6
M83513 / 09-A15	MP-221-009-261-00Y7
M83513 / 09-A16	MP-221-009-261-00Y8
M83513 / 09-B01	MP-221-015-261-00W1
M83513 / 09-B02	MP-221-015-261-00W2
M83513 / 09-B03	MP-221-015-261-00V1
M83513 / 09-B04	MP-221-015-261-00V2
M83513 / 09-B05	MP-221-015-243-0000
M83513 / 09-B06	MP-221-015-253-0000
M83513 / 09-B07	MP-221-015-245-0000
M83513 / 09-B08	MP-221-015-255-0000
M83513 / 09-B09	MP-221-015-261-00Y1
M83513 / 09-B10	MP-221-015-261-00Y2
M83513 / 09-B11	MP-221-015-261-00Y3
M83513 / 09-B12	MP-221-015-261-00Y4
M83513 / 09-B13	MP-221-015-261-00Y5
M83513 / 09-B14	MP-221-015-261-00Y6
M83513 / 09-B15	MP-221-015-261-00Y7
M83513 / 09-B16	MP-221-015-261-00Y8
M83513 / 09-C01	MP-221-021-261-00W1
M83513 / 09-C02	MP-221-021-261-00W2
M83513 / 09-C03	MP-221-021-261-00V1
M83513 / 09-C04	MP-221-021-261-00V2
M83513 / 09-C05	MP-221-021-243-0000
M83513 / 09-C06	MP-221-021-253-0000
M83513 / 09-C07	MP-221-021-245-0000
M83513 / 09-C08	MP-221-021-255-0000
M83513 / 09-C09	MP-221-021-261-00Y1
M83513 / 09-C10	MP-221-021-261-00Y2
M83513 / 09-C11	MP-221-021-261-00Y3
M83513 / 09-C12	MP-221-021-261-00Y4
M83513 / 09-C13	MP-221-021-261-00Y5
M83513 / 09-C14	MP-221-021-261-00Y6
M83513 / 09-C15	MP-221-021-261-00Y7
M83513 / 09-C16	MP-221-021-261-00Y8
M83513 / 09-D01	MP-221-025-261-00W1
M83513 / 09-D02	MP-221-025-261-00W2
M83513 / 09-D03	MP-221-025-261-00V1
M83513 / 09-D04	MP-221-025-261-00V2
M83513 / 09-D05	MP-221-025-243-0000
M83513 / 09-D06	MP-221-025-253-0000
M83513 / 09-D07	MP-221-025-245-0000
M83513 / 09-D08	MP-221-025-255-0000
M83513 / 09-D09	MP-221-025-261-00Y1
M83513 / 09-D10	MP-221-025-261-00Y2
M83513 / 09-D11	MP-221-025-261-00Y3
M83513 / 09-D12	MP-221-025-261-00Y4
M83513 / 09-D13	MP-221-025-261-00Y5
M83513 / 09-D14	MP-221-025-261-00Y6
M83513 / 09-D15	MP-221-025-261-00Y7
M83513 / 09-D16	MP-221-025-261-00Y8
M83513 / 09-E01	MP-221-031-261-00W1
M83513 / 09-E02	MP-221-031-261-00W2
M83513 / 09-E03	MP-221-031-261-00V1
M83513 / 09-E04	MP-221-031-261-00V2
M83513 / 09-E05	MP-221-031-243-0000
M83513 / 09-E06	MP-221-031-253-0000
M83513 / 09-E07	MP-221-031-245-0000
M83513 / 09-E08	MP-221-031-255-0000
M83513 / 09-E09	MP-221-031-261-00Y1
M83513 / 09-E10	MP-221-031-261-00Y2
M83513 / 09-E11	MP-221-031-261-00Y3
M83513 / 09-E12	MP-221-031-261-00Y4
M83513 / 09-E13	MP-221-031-261-00Y5
M83513 / 09-E14	MP-221-031-261-00Y6
M83513 / 09-E15	MP-221-031-261-00Y7
M83513 / 09-E16	MP-221-031-261-00Y8
M83513 / 09-F01	MP-221-037-261-00W1
M83513 / 09-F02	MP-221-037-261-00W2
M83513 / 09-F03	MP-221-037-261-00V1
M83513 / 09-F04	MP-221-037-261-00V2
M83513 / 09-F05	MP-221-037-243-0000
M83513 / 09-F06	MP-221-037-253-0000
M83513 / 09-F07	MP-221-037-245-0000
M83513 / 09-F08	MP-221-037-255-0000
M83513 / 09-F09	MP-221-037-261-00Y1
M83513 / 09-F10	MP-221-037-261-00Y2
M83513 / 09-F11	MP-221-037-261-00Y3
M83513 / 09-F12	MP-221-037-261-00Y4
M83513 / 09-F13	MP-221-037-261-00Y5
M83513 / 09-F14	MP-221-037-261-00Y6
M83513 / 09-F15	MP-221-037-261-00Y7
M83513 / 09-F16	MP-221-037-261-00Y8
M83513 / 09-G01	MP-321-051-261-00W1
M83513 / 09-G02	MP-321-051-261-00W2
M83513 / 09-G03	MP-321-051-261-00V1
M83513 / 09-G04	MP-321-051-261-00V2
M83513 / 09-G05	MP-321-051-243-0000
M83513 / 09-G06	MP-321-051-253-0000
M83513 / 09-G07	MP-321-051-245-0000
M83513 / 09-G08	MP-321-051-255-0000
M83513 / 09-G09	MP-321-051-261-00Y1
M83513 / 09-G10	MP-321-051-261-00Y2
M83513 / 09-G11	MP-321-051-261-00Y3
M83513 / 09-G12	MP-321-051-261-00Y4
M83513 / 09-G13	MP-321-051-261-00Y5
M83513 / 09-G14	MP-321-051-261-00Y6
M83513 / 09-G15	MP-321-051-261-00Y7
M83513 / 09-G16	MP-321-051-261-00Y8

M83513 / 10

M83513 / 10-A01CN	MK-2R3-009-325-000S
M83513 / 10-A01CP	MK-2R3-009-325-220S
M83513 / 10-A01CT	MK-2R3-009-325-000S-0B7
M83513 / 10-A01CW	MK-2R3-009-325-220S-0B7
M83513 / 10-A01NN	MK-2R2-009-325-000S
M83513 / 10-A01NP	MK-2R2-009-325-220S
M83513 / 10-A01NT	MK-2R2-009-325-000S-0B7
M83513 / 10-A01NW	MK-2R2-009-325-220S-0B7
M83513 / 10-A01PN	MK-2R5-009-325-000S
M83513 / 10-A01PP	MK-2R5-009-325-220S
M83513 / 10-A01PT	MK-2R5-009-325-000S-0B7
M83513 / 10-A01PW	MK-2R5-009-325-220S-0B7
M83513 / 10-A02CN	MK-2R3-009-335-000S
M83513 / 10-A02CP	MK-2R3-009-335-220S
M83513 / 10-A02CT	MK-2R3-009-335-000S-0B7
M83513 / 10-A02CW	MK-2R3-009-335-220S-0B7
M83513 / 10-A02NN	MK-2R2-009-335-000S
M83513 / 10-A02NP	MK-2R2-009-335-220S

Military Cross Reference Chart

– Continued from previous page

M83513 / 10 (continued)

M83513 / 10-A02NT	MK-2R2-009-335-000S-0B7
M83513 / 10-A02NW	MK-2R2-009-335-220S-0B7
M83513 / 10-A02PN	MK-2R5-009-335-000S
M83513 / 10-A02PP	MK-2R5-009-335-220S
M83513 / 10-A02PT	MK-2R5-009-335-000S-0B7
M83513 / 10-A02PW	MK-2R5-009-335-220S-0B7
M83513 / 10-A03CN	MK-2R3-009-345-000S
M83513 / 10-A03CP	MK-2R3-009-345-220S
M83513 / 10-A03CT	MK-2R3-009-345-000S-0B7
M83513 / 10-A03CW	MK-2R3-009-345-220S-0B7
M83513 / 10-A03NN	MK-2R2-009-345-000S
M83513 / 10-A03NP	MK-2R2-009-345-220S
M83513 / 10-A03NT	MK-2R2-009-345-000S-0B7
M83513 / 10-A03NW	MK-2R2-009-345-220S-0B7
M83513 / 10-A03PN	MK-2R5-009-345-000S
M83513 / 10-A03PP	MK-2R5-009-345-220S
M83513 / 10-A03PT	MK-2R5-009-345-000S-0B7
M83513 / 10-A03PW	MK-2R5-009-345-220S-0B7
M83513 / 10-B01CN	MK-2R3-015-325-000S
M83513 / 10-B01CP	MK-2R3-015-325-220S
M83513 / 10-B01CT	MK-2R3-015-325-000S-0B7
M83513 / 10-B01CW	MK-2R3-015-325-220S-0B7
M83513 / 10-B01NN	MK-2R2-015-325-000S
M83513 / 10-B01NP	MK-2R2-015-325-220S
M83513 / 10-B01NT	MK-2R2-015-325-000S-0B7
M83513 / 10-B01NW	MK-2R2-015-325-220S-0B7
M83513 / 10-B01PN	MK-2R5-015-325-000S
M83513 / 10-B01PP	MK-2R5-015-325-220S
M83513 / 10-B01PT	MK-2R5-015-325-000S-0B7
M83513 / 10-B01PW	MK-2R5-015-325-220S-0B7
M83513 / 10-B02CN	MK-2R3-015-335-000S
M83513 / 10-B02CP	MK-2R3-015-335-220S
M83513 / 10-B02CT	MK-2R3-015-335-000S-0B7
M83513 / 10-B02CW	MK-2R3-015-335-220S-0B7
M83513 / 10-B02NN	MK-2R2-015-335-000S
M83513 / 10-B02NP	MK-2R2-015-335-220S
M83513 / 10-B02NT	MK-2R2-015-335-000S-0B7
M83513 / 10-B02NW	MK-2R2-015-335-220S-0B7
M83513 / 10-B02PN	MK-2R5-015-335-000S
M83513 / 10-B02PP	MK-2R5-015-335-220S
M83513 / 10-B02PT	MK-2R5-015-335-000S-0B7
M83513 / 10-B02PW	MK-2R5-015-335-220S-0B7
M83513 / 10-B03CN	MK-2R3-015-345-000S
M83513 / 10-B03CP	MK-2R3-015-345-220S
M83513 / 10-B03CT	MK-2R3-015-345-000S-0B7
M83513 / 10-B03CW	MK-2R3-015-345-220S-0B7
M83513 / 10-B03NN	MK-2R2-015-345-000S
M83513 / 10-B03NP	MK-2R2-015-345-220S
M83513 / 10-B03NT	MK-2R2-015-345-000S-0B7
M83513 / 10-B03NW	MK-2R2-015-345-220S-0B7
M83513 / 10-B03PN	MK-2R5-015-345-000S
M83513 / 10-B03PP	MK-2R5-015-345-220S
M83513 / 10-B03PT	MK-2R5-015-345-000S-0B7
M83513 / 10-B03PW	MK-2R5-015-345-220S-0B7
M83513 / 10-C01CN	MK-2R3-021-325-000S
M83513 / 10-C01CP	MK-2R3-021-325-220S
M83513 / 10-C01CT	MK-2R3-021-325-000S-0B7
M83513 / 10-C01CW	MK-2R3-021-325-220S-0B7
M83513 / 10-C01NN	MK-2R2-021-325-000S
M83513 / 10-C01NP	MK-2R2-021-325-220S
M83513 / 10-C01NT	MK-2R2-021-325-000S-0B7
M83513 / 10-C01NW	MK-2R2-021-325-220S-0B7
M83513 / 10-C01PN	MK-2R5-021-325-000S
M83513 / 10-C01PP	MK-2R5-021-325-220S
M83513 / 10-C01PT	MK-2R5-021-325-000S-0B7
M83513 / 10-C01PW	MK-2R5-021-325-220S-0B7
M83513 / 10-C02CN	MK-2R3-021-335-000S
M83513 / 10-C02CP	MK-2R3-021-335-220S
M83513 / 10-C02CT	MK-2R3-021-335-000S-0B7
M83513 / 10-C02CW	MK-2R3-021-335-220S-0B7
M83513 / 10-C02NN	MK-2R2-021-335-000S
M83513 / 10-C02NP	MK-2R2-021-335-220S
M83513 / 10-C02NT	MK-2R2-021-335-000S-0B7
M83513 / 10-C02NW	MK-2R2-021-335-220S-0B7
M83513 / 10-C02PN	MK-2R5-021-335-000S
M83513 / 10-C02PP	MK-2R5-021-335-220S
M83513 / 10-C02PT	MK-2R5-021-335-000S-0B7
M83513 / 10-C02PW	MK-2R5-021-335-220S-0B7
M83513 / 10-C03CN	MK-2R3-021-345-000S
M83513 / 10-C03CP	MK-2R3-021-345-220S
M83513 / 10-C03CT	MK-2R3-021-345-000S-0B7
M83513 / 10-C03CW	MK-2R3-021-345-220S-0B7
M83513 / 10-C03NN	MK-2R2-021-345-000S
M83513 / 10-C03NP	MK-2R2-021-345-220S
M83513 / 10-C03NT	MK-2R2-021-345-000S-0B7
M83513 / 10-C03NW	MK-2R2-021-345-220S-0B7
M83513 / 10-C03PN	MK-2R5-021-345-000S
M83513 / 10-C03PP	MK-2R5-021-345-220S
M83513 / 10-C03PT	MK-2R5-021-345-000S-0B7
M83513 / 10-C03PW	MK-2R5-021-345-220S-0B7
M83513 / 10-D01CN	MK-2R3-025-325-000S
M83513 / 10-D01CP	MK-2R3-025-325-220S
M83513 / 10-D01CT	MK-2R3-025-325-000S-0B7
M83513 / 10-D01CW	MK-2R3-025-325-220S-0B7
M83513 / 10-D01NN	MK-2R2-025-325-000S
M83513 / 10-D01NP	MK-2R2-025-325-220S
M83513 / 10-D01NT	MK-2R2-025-325-000S-0B7
M83513 / 10-D01NW	MK-2R2-025-325-220S-0B7
M83513 / 10-D01PN	MK-2R5-025-325-000S
M83513 / 10-D01PP	MK-2R5-025-325-220S
M83513 / 10-D01PT	MK-2R5-025-325-000S-0B7
M83513 / 10-D01PW	MK-2R5-025-325-220S-0B7
M83513 / 10-D02CN	MK-2R3-025-335-000S
M83513 / 10-D02CP	MK-2R3-025-335-220S
M83513 / 10-D02CT	MK-2R3-025-335-000S-0B7
M83513 / 10-D02CW	MK-2R3-025-335-220S-0B7
M83513 / 10-D02NN	MK-2R2-025-335-000S
M83513 / 10-D02NP	MK-2R2-025-335-220S
M83513 / 10-D02NT	MK-2R2-025-335-000S-0B7
M83513 / 10-D02NW	MK-2R2-025-335-220S-0B7
M83513 / 10-D02PN	MK-2R5-025-335-000S
M83513 / 10-D02PP	MK-2R5-025-335-220S
M83513 / 10-D02PT	MK-2R5-025-335-000S-0B7
M83513 / 10-D02PW	MK-2R5-025-335-220S-0B7
M83513 / 10-D03CN	MK-2R3-025-345-000S
M83513 / 10-D03CP	MK-2R3-025-345-220S
M83513 / 10-D03CT	MK-2R3-025-345-000S-0B7
M83513 / 10-D03CW	MK-2R3-025-345-220S-0B7
M83513 / 10-D03NN	MK-2R2-025-345-000S
M83513 / 10-D03NP	MK-2R2-025-345-220S
M83513 / 10-D03NT	MK-2R2-025-345-000S-0B7
M83513 / 10-D03NW	MK-2R2-025-345-220S-0B7
M83513 / 10-D03PN	MK-2R5-025-345-000S
M83513 / 10-D03PP	MK-2R5-025-345-220S
M83513 / 10-D03PT	MK-2R5-025-345-000S-0B7
M83513 / 10-D03PW	MK-2R5-025-345-220S-0B7
M83513 / 10-E01CN	MK-2R3-031-325-000S
M83513 / 10-E01CP	MK-2R3-031-325-220S
M83513 / 10-E01CT	MK-2R3-031-325-000S-0B7
M83513 / 10-E01CW	MK-2R3-031-325-220S-0B7
M83513 / 10-E01NN	MK-2R2-031-325-000S
M83513 / 10-E01NP	MK-2R2-031-325-220S
M83513 / 10-E01NT	MK-2R2-031-325-000S-0B7
M83513 / 10-E01NW	MK-2R2-031-325-220S-0B7
M83513 / 10-E01PN	MK-2R5-031-325-000S
M83513 / 10-E01PP	MK-2R5-031-325-220S
M83513 / 10-E01PT	MK-2R5-031-325-000S-0B7
M83513 / 10-E01PW	MK-2R5-031-325-220S-0B7
M83513 / 10-E02CN	MK-2R3-031-335-000S
M83513 / 10-E02CP	MK-2R3-031-335-220S
M83513 / 10-E02CT	MK-2R3-031-335-000S-0B7
M83513 / 10-E02CW	MK-2R3-031-335-220S-0B7
M83513 / 10-E02NN	MK-2R2-031-335-000S
M83513 / 10-E02NP	MK-2R2-031-335-220S
M83513 / 10-E02NT	MK-2R2-031-335-000S-0B7
M83513 / 10-E02NW	MK-2R2-031-335-220S-0B7
M83513 / 10-E02PN	MK-2R5-031-335-000S
M83513 / 10-E02PP	MK-2R5-031-335-220S
M83513 / 10-E02PT	MK-2R5-031-335-000S-0B7
M83513 / 10-E02PW	MK-2R5-031-335-220S-0B7
M83513 / 10-E03CN	MK-2R3-031-345-000S
M83513 / 10-E03CP	MK-2R3-031-345-220S
M83513 / 10-E03CT	MK-2R3-031-345-000S-0B7
M83513 / 10-E03CW	MK-2R3-031-345-220S-0B7
M83513 / 10-E03NN	MK-2R2-031-345-000S
M83513 / 10-E03NP	MK-2R2-031-345-220S
M83513 / 10-E03NT	MK-2R2-031-345-000S-0B7
M83513 / 10-E03NW	MK-2R2-031-345-220S-0B7
M83513 / 10-E03PN	MK-2R5-031-345-000S
M83513 / 10-E03PP	MK-2R5-031-345-220S
M83513 / 10-E03PT	MK-2R5-031-345-000S-0B7
M83513 / 10-E03PW	MK-2R5-031-345-220S-0B7

AirBorn

Military Cross Reference Chart

– Continued from previous page

M83513 / 10 (continued)

M83513 / 10-F01CN	MK-2R3-037-325-000S	M83513 / 10-F02CN	MK-2R3-037-335-000S	M83513 / 10-F03CN	MK-2R3-037-345-000S
M83513 / 10-F01CP	MK-2R3-037-325-220S	M83513 / 10-F02CP	MK-2R3-037-335-220S	M83513 / 10-F03CP	MK-2R3-037-345-220S
M83513 / 10-F01CT	MK-2R3-037-325-000S-0B7	M83513 / 10-F02CT	MK-2R3-037-335-000S-0B7	M83513 / 10-F03CT	MK-2R3-037-345-000S-0B7
M83513 / 10-F01CW	MK-2R3-037-325-220S-0B7	M83513 / 10-F02CW	MK-2R3-037-335-220S-0B7	M83513 / 10-F03CW	MK-2R3-037-345-220S-0B7
M83513 / 10-F01NN	MK-2R2-037-325-000S	M83513 / 10-F02NN	MK-2R2-037-335-000S	M83513 / 10-F03NN	MK-2R2-037-345-000S
M83513 / 10-F01NP	MK-2R2-037-325-220S	M83513 / 10-F02NP	MK-2R2-037-335-220S	M83513 / 10-F03NP	MK-2R2-037-345-220S
M83513 / 10-F01NT	MK-2R2-037-325-000S-0B7	M83513 / 10-F02NT	MK-2R2-037-335-000S-0B7	M83513 / 10-F03NT	MK-2R2-037-345-000S-0B7
M83513 / 10-F01NW	MK-2R2-037-325-220S-0B7	M83513 / 10-F02NW	MK-2R2-037-335-220S-0B7	M83513 / 10-F03NW	MK-2R2-037-345-220S-0B7
M83513 / 10-F01PN	MK-2R5-037-325-000S	M83513 / 10-F02PN	MK-2R5-037-335-000S	M83513 / 10-F03PN	MK-2R5-037-345-000S
M83513 / 10-F01PP	MK-2R5-037-325-220S	M83513 / 10-F02PP	MK-2R5-037-335-220S	M83513 / 10-F03PP	MK-2R5-037-345-220S
M83513 / 10-F01PT	MK-2R5-037-325-000S-0B7	M83513 / 10-F02PT	MK-2R5-037-335-000S-0B7	M83513 / 10-F03PT	MK-2R5-037-345-000S-0B7
M83513 / 10-F01PW	MK-2R5-037-325-220S-0B7	M83513 / 10-F02PW	MK-2R5-037-335-220S-0B7	M83513 / 10-F03PW	MK-2R5-037-345-220S-0B7

M83513 / 11

M83513 / 11-G01CN	MK-3R3-051-325-000S	M83513 / 11-G02CN	MK-3R3-051-335-000S	M83513 / 11-G03CN	MK-3R3-051-345-000S
M83513 / 11-G01CP	MK-3R3-051-325-220S	M83513 / 11-G02CP	MK-3R3-051-335-220S	M83513 / 11-G03CP	MK-3R3-051-345-220S
M83513 / 11-G01CT	MK-3R3-051-325-000S-0B7	M83513 / 11-G02CT	MK-3R3-051-335-000S-0B7	M83513 / 11-G03CT	MK-3R3-051-345-000S-0B7
M83513 / 11-G01CW	MK-3R3-051-325-220S-0B7	M83513 / 11-G02CW	MK-3R3-051-335-220S-0B7	M83513 / 11-G03CW	MK-3R3-051-345-220S-0B7
M83513 / 11-G01NN	MK-3R2-051-325-000S	M83513 / 11-G02NN	MK-3R2-051-335-000S	M83513 / 11-G03NN	MK-3R2-051-345-000S
M83513 / 11-G01NP	MK-3R2-051-325-220S	M83513 / 11-G02NP	MK-3R2-051-335-220S	M83513 / 11-G03NP	MK-3R2-051-345-220S
M83513 / 11-G01NT	MK-3R2-051-325-000S-0B7	M83513 / 11-G02NT	MK-3R2-051-335-000S-0B7	M83513 / 11-G03NT	MK-3R2-051-345-000S-0B7
M83513 / 11-G01NW	MK-3R2-051-325-220S-0B7	M83513 / 11-G02NW	MK-3R2-051-335-220S-0B7	M83513 / 11-G03NW	MK-3R2-051-345-220S-0B7
M83513 / 11-G01PN	MK-3R5-051-325-000S	M83513 / 11-G02PN	MK-3R5-051-335-000S	M83513 / 11-G03PN	MK-3R5-051-345-000S
M83513 / 11-G01PP	MK-3R5-051-325-220S	M83513 / 11-G02PP	MK-3R5-051-335-220S	M83513 / 11-G03PP	MK-3R5-051-345-220S
M83513 / 11-G01PT	MK-3R5-051-325-000S-0B7	M83513 / 11-G02PT	MK-3R5-051-335-000S-0B7	M83513 / 11-G03PT	MK-3R5-051-345-000S-0B7
M83513 / 11-G01PW	MK-3R5-051-325-220S-0B7	M83513 / 11-G02PW	MK-3R5-051-335-220S-0B7	M83513 / 11-G03PW	MK-3R5-051-345-220S-0B7

M83513 / 12

M83513 / 12-H01CN	MK-4R3-100-325-000S-94P	M83513 / 12-H02CN	MK-4R3-100-335-000S-94P	M83513 / 12-H03CN	MK-4R3-100-345-000S-94P
M83513 / 12-H01CP	MK-4R3-100-325-620S-94P	M83513 / 12-H02CP	MK-4R3-100-335-620S-94P	M83513 / 12-H03CP	MK-4R3-100-345-620S-94P
M83513 / 12-H01CT	MK-4R3-100-325-000S-0BJ	M83513 / 12-H02CT	MK-4R3-100-335-000S-0BJ	M83513 / 12-H03CT	MK-4R3-100-345-000S-0BJ
M83513 / 12-H01CW	MK-4R3-100-325-620S-0BJ	M83513 / 12-H02CW	MK-4R3-100-335-620S-0BJ	M83513 / 12-H03CW	MK-4R3-100-345-620S-0BJ
M83513 / 12-H01NN	MK-4R2-100-325-000S-94P	M83513 / 12-H02NN	MK-4R2-100-335-000S-94P	M83513 / 12-H03NN	MK-4R2-100-345-000S-94P
M83513 / 12-H01NP	MK-4R2-100-325-620S-94P	M83513 / 12-H02NP	MK-4R2-100-335-620S-94P	M83513 / 12-H03NP	MK-4R2-100-345-620S-94P
M83513 / 12-H01NT	MK-4R2-100-325-000S-0BJ	M83513 / 12-H02NT	MK-4R2-100-335-000S-0BJ	M83513 / 12-H03NT	MK-4R2-100-345-000S-0BJ
M83513 / 12-H01NW	MK-4R2-100-325-620S-0BJ	M83513 / 12-H02NW	MK-4R2-100-335-620S-0BJ	M83513 / 12-H03NW	MK-4R2-100-345-620S-0BJ
M83513 / 12-H01PN	MK-4R5-100-325-000S-94P	M83513 / 12-H02PN	MK-4R5-100-335-000S-94P	M83513 / 12-H03PN	MK-4R5-100-345-000S-94P
M83513 / 12-H01PP	MK-4R5-100-325-620S-94P	M83513 / 12-H02PP	MK-4R5-100-335-620S-94P	M83513 / 12-H03PP	MK-4R5-100-345-620S-94P
M83513 / 12-H01PT	MK-4R5-100-325-000S-0BJ	M83513 / 12-H02PT	MK-4R5-100-335-000S-0BJ	M83513 / 12-H03PT	MK-4R5-100-345-000S-0BJ
M83513 / 12-H01PW	MK-4R5-100-325-620S-0BJ	M83513 / 12-H02PW	MK-4R5-100-335-620S-0BJ	M83513 / 12-H03PW	MK-4R5-100-345-620S-0BJ

M83513 / 13

M83513 / 13-A01CN	MK-2S3-009-435-000S-900	M83513 / 13-A02CN	MK-2S3-009-445-000S-900	M83513 / 13-A03CN	MK-2S3-009-455-000S-900
M83513 / 13-A01CP	MK-2S3-009-435-220S-900	M83513 / 13-A02CP	MK-2S3-009-445-220S-900	M83513 / 13-A03CP	MK-2S3-009-455-220S-900
M83513 / 13-A01CT	MK-2S3-009-435-000S-0B7	M83513 / 13-A02CT	MK-2S3-009-445-000S-0B7	M83513 / 13-A03CT	MK-2S3-009-455-000S-0B7
M83513 / 13-A01CW	MK-2S3-009-435-220S-0B7	M83513 / 13-A02CW	MK-2S3-009-445-220S-0B7	M83513 / 13-A03CW	MK-2S3-009-455-220S-0B7
M83513 / 13-A01NN	MK-2S2-009-435-000S-900	M83513 / 13-A02NN	MK-2S2-009-445-000S-900	M83513 / 13-A03NN	MK-2S2-009-455-000S-900
M83513 / 13-A01NP	MK-2S2-009-435-220S-900	M83513 / 13-A02NP	MK-2S2-009-445-220S-900	M83513 / 13-A03NP	MK-2S2-009-455-220S-900
M83513 / 13-A01NT	MK-2S2-009-435-000S-0B7	M83513 / 13-A02NT	MK-2S2-009-445-000S-0B7	M83513 / 13-A03NT	MK-2S2-009-455-000S-0B7
M83513 / 13-A01NW	MK-2S2-009-435-220S-0B7	M83513 / 13-A02NW	MK-2S2-009-445-220S-0B7	M83513 / 13-A03NW	MK-2S2-009-455-220S-0B7
M83513 / 13-A01PN	MK-2S5-009-435-000S-900	M83513 / 13-A02PN	MK-2S5-009-445-000S-900	M83513 / 13-A03PN	MK-2S5-009-455-000S-900
M83513 / 13-A01PP	MK-2S5-009-435-220S-900	M83513 / 13-A02PP	MK-2S5-009-445-220S-900	M83513 / 13-A03PP	MK-2S5-009-455-220S-900
M83513 / 13-A01PT	MK-2S5-009-435-000S-0B7	M83513 / 13-A02PT	MK-2S5-009-445-000S-0B7	M83513 / 13-A03PT	MK-2S5-009-455-000S-0B7
M83513 / 13-A01PW	MK-2S5-009-435-220S-0B7	M83513 / 13-A02PW	MK-2S5-009-445-220S-0B7	M83513 / 13-A03PW	MK-2S5-009-455-220S-0B7

Military Cross Reference Chart

-- Continued from previous page

M83513 / 13 (continued)

M83513 / 13-B01CN	MK-2S3-015-435-000S-900
M83513 / 13-B01CP	MK-2S3-015-435-220S-900
M83513 / 13-B01CT	MK-2S3-015-435-000S-0B7
M83513 / 13-B01CW	MK-2S3-015-435-220S-0B7
M83513 / 13-B01NN	MK-2S2-015-435-000S-900
M83513 / 13-B01NP	MK-2S2-015-435-220S-900
M83513 / 13-B01NT	MK-2S2-015-435-000S-0B7
M83513 / 13-B01NW	MK-2S2-015-435-220S-0B7
M83513 / 13-B01PN	MK-2S5-015-435-000S-900
M83513 / 13-B01PP	MK-2S5-015-435-220S-900
M83513 / 13-B01PT	MK-2S5-015-435-000S-0B7
M83513 / 13-B01PW	MK-2S5-015-435-220S-0B7
M83513 / 13-B02CN	MK-2S3-015-445-000S-900
M83513 / 13-B02CP	MK-2S3-015-445-220S-900
M83513 / 13-B02CT	MK-2S3-015-445-000S-0B7
M83513 / 13-B02CW	MK-2S3-015-445-220S-0B7
M83513 / 13-B02NN	MK-2S2-015-445-000S-900
M83513 / 13-B02NP	MK-2S2-015-445-220S-900
M83513 / 13-B02NT	MK-2S2-015-445-000S-0B7
M83513 / 13-B02NW	MK-2S2-015-445-220S-0B7
M83513 / 13-B02PN	MK-2S5-015-445-000S-900
M83513 / 13-B02PP	MK-2S5-015-445-220S-900
M83513 / 13-B02PT	MK-2S5-015-445-000S-0B7
M83513 / 13-B02PW	MK-2S5-015-445-220S-0B7
M83513 / 13-B03CN	MK-2S3-015-455-000S-900
M83513 / 13-B03CP	MK-2S3-015-455-220S-900
M83513 / 13-B03CT	MK-2S3-015-455-000S-0B7
M83513 / 13-B03CW	MK-2S3-015-455-220S-0B7
M83513 / 13-B03NN	MK-2S2-015-455-000S-900
M83513 / 13-B03NP	MK-2S2-015-455-220S-900
M83513 / 13-B03NT	MK-2S2-015-455-000S-0B7
M83513 / 13-B03NW	MK-2S2-015-455-220S-0B7
M83513 / 13-B03PN	MK-2S5-015-455-000S-900
M83513 / 13-B03PP	MK-2S5-015-455-220S-900
M83513 / 13-B03PT	MK-2S5-015-455-000S-0B7
M83513 / 13-B03PW	MK-2S5-015-455-220S-0B7
M83513 / 13-C01CN	MK-2S3-021-435-000S-900
M83513 / 13-C01CP	MK-2S3-021-435-220S-900
M83513 / 13-C01CT	MK-2S3-021-435-000S-0B7
M83513 / 13-C01CW	MK-2S3-021-435-220S-0B7
M83513 / 13-C01NN	MK-2S2-021-435-000S-900
M83513 / 13-C01NP	MK-2S2-021-435-220S-900
M83513 / 13-C01NT	MK-2S2-021-435-000S-0B7
M83513 / 13-C01NW	MK-2S2-021-435-220S-0B7
M83513 / 13-C01PN	MK-2S5-021-435-000S-900
M83513 / 13-C01PP	MK-2S5-021-435-220S-900
M83513 / 13-C01PT	MK-2S5-021-435-000S-0B7
M83513 / 13-C01PW	MK-2S5-021-435-220S-0B7
M83513 / 13-C02CN	MK-2S3-021-445-000S-900
M83513 / 13-C02CP	MK-2S3-021-445-220S-900
M83513 / 13-C02CT	MK-2S3-021-445-000S-0B7
M83513 / 13-C02CW	MK-2S3-021-445-220S-0B7
M83513 / 13-C02NN	MK-2S2-021-445-000S-900
M83513 / 13-C02NP	MK-2S2-021-445-220S-900
M83513 / 13-C02NT	MK-2S2-021-445-000S-0B7
M83513 / 13-C02NW	MK-2S2-021-445-220S-0B7
M83513 / 13-C02PN	MK-2S5-021-445-000S-900
M83513 / 13-C02PP	MK-2S5-021-445-220S-900
M83513 / 13-C02PT	MK-2S5-021-445-000S-0B7
M83513 / 13-C02PW	MK-2S5-021-445-220S-0B7
M83513 / 13-C03CN	MK-2S3-021-455-000S-900
M83513 / 13-C03CP	MK-2S3-021-455-220S-900
M83513 / 13-C03CT	MK-2S3-021-455-000S-0B7
M83513 / 13-C03CW	MK-2S3-021-455-220S-0B7
M83513 / 13-C03NN	MK-2S2-021-455-000S-900
M83513 / 13-C03NP	MK-2S2-021-455-220S-900
M83513 / 13-C03NT	MK-2S2-021-455-000S-0B7
M83513 / 13-C03NW	MK-2S2-021-455-220S-0B7
M83513 / 13-C03PN	MK-2S5-021-455-000S-900
M83513 / 13-C03PP	MK-2S5-021-455-220S-900
M83513 / 13-C03PT	MK-2S5-021-455-000S-0B7
M83513 / 13-C03PW	MK-2S5-021-455-220S-0B7
M83513 / 13-D01CN	MK-2S3-025-435-000S-900
M83513 / 13-D01CP	MK-2S3-025-435-220S-900
M83513 / 13-D01CT	MK-2S3-025-435-000S-0B7
M83513 / 13-D01CW	MK-2S3-025-435-220S-0B7
M83513 / 13-D01NN	MK-2S2-025-435-000S-900
M83513 / 13-D01NP	MK-2S2-025-435-220S-900
M83513 / 13-D01NT	MK-2S2-025-435-000S-0B7
M83513 / 13-D01NW	MK-2S2-025-435-220S-0B7
M83513 / 13-D01PN	MK-2S5-025-435-000S-900
M83513 / 13-D01PP	MK-2S5-025-435-220S-900
M83513 / 13-D01PT	MK-2S5-025-435-000S-0B7
M83513 / 13-D01PW	MK-2S5-025-435-220S-0B7
M83513 / 13-D02CN	MK-2S3-025-445-000S-900
M83513 / 13-D02CP	MK-2S3-025-445-220S-900
M83513 / 13-D02CT	MK-2S3-025-445-000S-0B7
M83513 / 13-D02CW	MK-2S3-025-445-220S-0B7
M83513 / 13-D02NN	MK-2S2-025-445-000S-900
M83513 / 13-D02NP	MK-2S2-025-445-220S-900
M83513 / 13-D02NT	MK-2S2-025-445-000S-0B7
M83513 / 13-D02NW	MK-2S2-025-445-220S-0B7
M83513 / 13-D02PN	MK-2S5-025-445-000S-900
M83513 / 13-D02PP	MK-2S5-025-445-220S-900
M83513 / 13-D02PT	MK-2S5-025-445-000S-0B7
M83513 / 13-D02PW	MK-2S5-025-445-220S-0B7
M83513 / 13-D03CN	MK-2S3-025-455-000S-900
M83513 / 13-D03CP	MK-2S3-025-455-220S-900
M83513 / 13-D03CT	MK-2S3-025-455-000S-0B7
M83513 / 13-D03CW	MK-2S3-025-455-220S-0B7
M83513 / 13-D03NN	MK-2S2-025-455-000S-900
M83513 / 13-D03NP	MK-2S2-025-455-220S-900
M83513 / 13-D03NT	MK-2S2-025-455-000S-0B7
M83513 / 13-D03NW	MK-2S2-025-455-220S-0B7
M83513 / 13-D03PN	MK-2S5-025-455-000S-900
M83513 / 13-D03PP	MK-2S5-025-455-220S-900
M83513 / 13-D03PT	MK-2S5-025-455-000S-0B7
M83513 / 13-D03PW	MK-2S5-025-455-220S-0B7
M83513 / 13-E01CN	MK-2S3-031-435-000S-900
M83513 / 13-E01CP	MK-2S3-031-435-220S-900
M83513 / 13-E01CT	MK-2S3-031-435-000S-0B7
M83513 / 13-E01CW	MK-2S3-031-435-220S-0B7
M83513 / 13-E01NN	MK-2S2-031-435-000S-900
M83513 / 13-E01NP	MK-2S2-031-435-220S-900
M83513 / 13-E01NT	MK-2S2-031-435-000S-0B7
M83513 / 13-E01NW	MK-2S2-031-435-220S-0B7
M83513 / 13-E01PN	MK-2S5-031-435-000S-900
M83513 / 13-E01PP	MK-2S5-031-435-220S-900
M83513 / 13-E01PT	MK-2S5-031-435-000S-0B7
M83513 / 13-E01PW	MK-2S5-031-435-220S-0B7
M83513 / 13-E02CN	MK-2S3-031-445-000S-900
M83513 / 13-E02CP	MK-2S3-031-445-220S-900
M83513 / 13-E02CT	MK-2S3-031-445-000S-0B7
M83513 / 13-E02CW	MK-2S3-031-445-220S-0B7
M83513 / 13-E02NN	MK-2S2-031-445-000S-900
M83513 / 13-E02NP	MK-2S2-031-445-220S-900
M83513 / 13-E02NT	MK-2S2-031-445-000S-0B7
M83513 / 13-E02NW	MK-2S2-031-445-220S-0B7
M83513 / 13-E02PN	MK-2S5-031-445-000S-900
M83513 / 13-E02PP	MK-2S5-031-445-220S-900
M83513 / 13-E02PT	MK-2S5-031-445-000S-0B7
M83513 / 13-E02PW	MK-2S5-031-445-220S-0B7
M83513 / 13-E03CN	MK-2S3-031-455-000S-900
M83513 / 13-E03CP	MK-2S3-031-455-220S-900
M83513 / 13-E03CT	MK-2S3-031-455-000S-0B7
M83513 / 13-E03CW	MK-2S3-031-455-220S-0B7
M83513 / 13-E03NN	MK-2S2-031-455-000S-900
M83513 / 13-E03NP	MK-2S2-031-455-220S-900
M83513 / 13-E03NT	MK-2S2-031-455-000S-0B7
M83513 / 13-E03NW	MK-2S2-031-455-220S-0B7
M83513 / 13-E03PN	MK-2S5-031-455-000S-900
M83513 / 13-E03PP	MK-2S5-031-455-220S-900
M83513 / 13-E03PT	MK-2S5-031-455-000S-0B7
M83513 / 13-E03PW	MK-2S5-031-455-220S-0B7
M83513 / 13-F01CN	MK-2S3-037-435-000S-900
M83513 / 13-F01CP	MK-2S3-037-435-220S-900
M83513 / 13-F01CT	MK-2S3-037-435-000S-0B7
M83513 / 13-F01CW	MK-2S3-037-435-220S-0B7
M83513 / 13-F01NN	MK-2S2-037-435-000S-900
M83513 / 13-F01NP	MK-2S2-037-435-220S-900
M83513 / 13-F01NT	MK-2S2-037-435-000S-0B7
M83513 / 13-F01NW	MK-2S2-037-435-220S-0B7
M83513 / 13-F01PN	MK-2S5-037-435-000S-900
M83513 / 13-F01PP	MK-2S5-037-435-220S-900
M83513 / 13-F01PT	MK-2S5-037-435-000S-0B7
M83513 / 13-F01PW	MK-2S5-037-435-220S-0B7
M83513 / 13-F02CN	MK-2S3-037-445-000S-900
M83513 / 13-F02CP	MK-2S3-037-445-220S-900
M83513 / 13-F02CT	MK-2S3-037-445-000S-0B7
M83513 / 13-F02CW	MK-2S3-037-445-220S-0B7
M83513 / 13-F02NN	MK-2S2-037-445-000S-900
M83513 / 13-F02NP	MK-2S2-037-445-220S-900

AirBorn

Military Cross Reference Chart

– Continued from previous page

M83513 / 13 (continued)

M83513 / 13-F02NT	MK-2S2-037-445-000S-0B7	M83513 / 13-F03CN	MK-2S3-037-455-000S-900	M83513 / 13-F03NT	MK-2S2-037-455-000S-0B7
M83513 / 13-F02NW	MK-2S2-037-445-220S-0B7	M83513 / 13-F03CP	MK-2S3-037-455-220S-900	M83513 / 13-F03NW	MK-2S2-037-455-220S-0B7
M83513 / 13-F02PN	MK-2S5-037-445-000S-900	M83513 / 13-F03CT	MK-2S3-037-455-000S-0B7	M83513 / 13-F03PN	MK-2S5-037-455-000S-900
M83513 / 13-F02PP	MK-2S5-037-445-220S-900	M83513 / 13-F03CW	MK-2S3-037-455-220S-0B7	M83513 / 13-F03PP	MK-2S5-037-455-220S-900
M83513 / 13-F02PT	MK-2S5-037-445-000S-0B7	M83513 / 13-F03NN	MK-2S2-037-455-000S-900	M83513 / 13-F03PT	MK-2S5-037-455-000S-0B7
M83513 / 13-F02PW	MK-2S5-037-445-220S-0B7	M83513 / 13-F03NP	MK-2S2-037-455-220S-900	M83513 / 13-F03PW	MK-2S5-037-455-220S-0B7

M83513 / 14

M83513 / 14-G01CN	MK-3S3-051-435-000S-900	M83513 / 14-G02CN	MK-3S3-051-445-000S-900	M83513 / 14-G03CN	MK-3S3-051-455-000S-900
M83513 / 14-G01CP	MK-3S3-051-435-220S-900	M83513 / 14-G02CP	MK-3S3-051-445-220S-900	M83513 / 14-G03CP	MK-3S3-051-455-220S-900
M83513 / 14-G01CT	MK-3S3-051-435-000S-0B7	M83513 / 14-G02CT	MK-3S3-051-445-000S-0B7	M83513 / 14-G03CT	MK-3S3-051-455-000S-0B7
M83513 / 14-G01CW	MK-3S3-051-435-220S-0B7	M83513 / 14-G02CW	MK-3S3-051-445-220S-0B7	M83513 / 14-G03CW	MK-3S3-051-455-220S-0B7
M83513 / 14-G01NN	MK-3S2-051-435-000S-900	M83513 / 14-G02NN	MK-3S2-051-445-000S-900	M83513 / 14-G03NN	MK-3S2-051-455-000S-900
M83513 / 14-G01NP	MK-3S2-051-435-220S-900	M83513 / 14-G02NP	MK-3S2-051-445-220S-900	M83513 / 14-G03NP	MK-3S2-051-455-220S-900
M83513 / 14-G01NT	MK-3S2-051-435-000S-0B7	M83513 / 14-G02NT	MK-3S2-051-445-000S-0B7	M83513 / 14-G03NT	MK-3S2-051-455-000S-0B7
M83513 / 14-G01NW	MK-3S2-051-435-220S-0B7	M83513 / 14-G02NW	MK-3S2-051-445-220S-0B7	M83513 / 14-G03NW	MK-3S2-051-455-220S-0B7
M83513 / 14-G01PN	MK-3S5-051-435-000S-900	M83513 / 14-G02PN	MK-3S5-051-445-000S-900	M83513 / 14-G03PN	MK-3S5-051-455-000S-900
M83513 / 14-G01PP	MK-3S5-051-435-220S-900	M83513 / 14-G02PP	MK-3S5-051-445-220S-900	M83513 / 14-G03PP	MK-3S5-051-455-220S-900
M83513 / 14-G01PT	MK-3S5-051-435-000S-0B7	M83513 / 14-G02PT	MK-3S5-051-445-000S-0B7	M83513 / 14-G03PT	MK-3S5-051-455-000S-0B7
M83513 / 14-G01PW	MK-3S5-051-435-220S-0B7	M83513 / 14-G02PW	MK-3S5-051-445-220S-0B7	M83513 / 14-G03PW	MK-3S5-051-455-220S-0B7

M83513 / 15

M83513 / 15-H01CN	MK-4S3-100-435-000S-900	M83513 / 15-H02CN	MK-4S3-100-445-000S-900	M83513 / 15-H03CN	MK-4S3-100-455-000S-900
M83513 / 15-H01CP	MK-4S3-100-435-620S-900	M83513 / 15-H02CP	MK-4S3-100-445-620S-900	M83513 / 15-H03CP	MK-4S3-100-455-620S-900
M83513 / 15-H01CT	MK-4S3-100-435-000S-0B7	M83513 / 15-H02CT	MK-4S3-100-445-000S-0B7	M83513 / 15-H03CT	MK-4S3-100-455-000S-0B7
M83513 / 15-H01CW	MK-4S3-100-435-620S-0B7	M83513 / 15-H02CW	MK-4S3-100-445-620S-0B7	M83513 / 15-H03CW	MK-4S3-100-455-620S-0B7
M83513 / 15-H01NN	MK-4S2-100-435-000S-900	M83513 / 15-H02NN	MK-4S2-100-445-000S-900	M83513 / 15-H03NN	MK-4S2-100-455-000S-900
M83513 / 15-H01NP	MK-4S2-100-435-620S-900	M83513 / 15-H02NP	MK-4S2-100-445-620S-900	M83513 / 15-H03NP	MK-4S2-100-455-620S-900
M83513 / 15-H01NT	MK-4S2-100-435-000S-0B7	M83513 / 15-H02NT	MK-4S2-100-445-000S-0B7	M83513 / 15-H03NT	MK-4S2-100-455-000S-0B7
M83513 / 15-H01NW	MK-4S2-100-435-620S-0B7	M83513 / 15-H02NW	MK-4S2-100-445-620S-0B7	M83513 / 15-H03NW	MK-4S2-100-455-620S-0B7
M83513 / 15-H01PN	MK-4S5-100-435-000S-900	M83513 / 15-H02PN	MK-4S5-100-445-000S-900	M83513 / 15-H03PN	MK-4S5-100-455-000S-900
M83513 / 15-H01PP	MK-4S5-100-435-620S-900	M83513 / 15-H02PP	MK-4S5-100-445-620S-900	M83513 / 15-H03PP	MK-4S5-100-455-620S-900
M83513 / 15-H01PT	MK-4S5-100-435-000S-0B7	M83513 / 15-H02PT	MK-4S5-100-445-000S-0B7	M83513 / 15-H03PT	MK-4S5-100-455-000S-0B7
M83513 / 15-H01PW	MK-4S5-100-435-620S-0B7	M83513 / 15-H02PW	MK-4S5-100-445-620S-0B7	M83513 / 15-H03PW	MK-4S5-100-455-620S-0B7

M83513 / 16

M83513 / 16-A01CN	MK-273-009-325-000R	M83513 / 16-A02NW	MK-272-009-335-220R-0B7	M83513 / 16-B01CN	MK-273-015-325-000R
M83513 / 16-A01CP	MK-273-009-325-220R	M83513 / 16-A02PN	MK-275-009-335-000R	M83513 / 16-B01CP	MK-273-015-325-220R
M83513 / 16-A01CT	MK-273-009-325-000R-0B7	M83513 / 16-A02PP	MK-275-009-335-220R	M83513 / 16-B01CT	MK-273-015-325-000R-0B7
M83513 / 16-A01CW	MK-273-009-325-220R-0B7	M83513 / 16-A02PT	MK-275-009-335-000R-0B7	M83513 / 16-B01CW	MK-273-015-325-220R-0B7
M83513 / 16-A01NN	MK-272-009-325-000R	M83513 / 16-A02PW	MK-275-009-335-220R-0B7	M83513 / 16-B01NN	MK-272-015-325-000R
M83513 / 16-A01NP	MK-272-009-325-220R	M83513 / 16-A03CN	MK-273-009-345-000R	M83513 / 16-B01NP	MK-272-015-325-220R
M83513 / 16-A01NT	MK-272-009-325-000R-0B7	M83513 / 16-A03CP	MK-273-009-345-220R	M83513 / 16-B01NT	MK-272-015-325-000R-0B7
M83513 / 16-A01NW	MK-272-009-325-220R-0B7	M83513 / 16-A03CT	MK-273-009-345-000R-0B7	M83513 / 16-B01NW	MK-272-015-325-220R-0B7
M83513 / 16-A01PN	MK-275-009-325-000R	M83513 / 16-A03CW	MK-273-009-345-220R-0B7	M83513 / 16-B01PN	MK-275-015-325-000R
M83513 / 16-A01PP	MK-275-009-325-220R	M83513 / 16-A03NN	MK-272-009-345-000R	M83513 / 16-B01PP	MK-275-015-325-220R
M83513 / 16-A01PT	MK-275-009-325-000R-0B7	M83513 / 16-A03NP	MK-272-009-345-220R	M83513 / 16-B01PT	MK-275-015-325-000R-0B7
M83513 / 16-A01PW	MK-275-009-325-220R-0B7	M83513 / 16-A03NT	MK-272-009-345-000R-0B7	M83513 / 16-B01PW	MK-275-015-325-220R-0B7
M83513 / 16-A02CN	MK-273-009-335-000R	M83513 / 16-A03NW	MK-272-009-345-220R-0B7	M83513 / 16-B02CN	MK-273-015-335-000R
M83513 / 16-A02CP	MK-273-009-335-220R	M83513 / 16-A03PN	MK-275-009-345-000R	M83513 / 16-B02CP	MK-273-015-335-220R
M83513 / 16-A02CT	MK-273-009-335-000R-0B7	M83513 / 16-A03PP	MK-275-009-345-220R	M83513 / 16-B02CT	MK-273-015-335-000R-0B7
M83513 / 16-A02CW	MK-273-009-335-220R-0B7	M83513 / 16-A03PT	MK-275-009-345-000R-0B7	M83513 / 16-B02CW	MK-273-015-335-220R-0B7
M83513 / 16-A02NN	MK-272-009-335-000R	M83513 / 16-A03PW	MK-275-009-345-220R-0B7	M83513 / 16-B02NN	MK-272-015-335-000R
M83513 / 16-A02NP	MK-272-009-335-220R			M83513 / 16-B02NP	MK-272-015-335-220R
M83513 / 16-A02NT	MK-272-009-335-000R-0B7			M83513 / 16-B02NT	MK-272-015-335-000R-0B7

Military Cross Reference Chart

-- Continued from previous page

M83513 / 16 (continued)

M83513 / 16-B02NW	MK-272-015-335-220R-0B7
M83513 / 16-B02PN	MK-275-015-335-000R
M83513 / 16-B02PP	MK-275-015-335-220R
M83513 / 16-B02PT	MK-275-015-335-000R-0B7
M83513 / 16-B02PW	MK-275-015-335-220R-0B7
M83513 / 16-B03CN	MK-273-015-345-000R
M83513 / 16-B03CP	MK-273-015-345-220R
M83513 / 16-B03CT	MK-273-015-345-000R-0B7
M83513 / 16-B03CW	MK-273-015-345-220R-0B7
M83513 / 16-B03NN	MK-272-015-345-000R
M83513 / 16-B03NP	MK-272-015-345-220R
M83513 / 16-B03NT	MK-272-015-345-000R-0B7
M83513 / 16-B03NW	MK-272-015-345-220R-0B7
M83513 / 16-B03PN	MK-275-015-345-000R
M83513 / 16-B03PP	MK-275-015-345-220R
M83513 / 16-B03PT	MK-275-015-345-000R-0B7
M83513 / 16-B03PW	MK-275-015-345-220R-0B7
M83513 / 16-C01CN	MK-273-021-325-000R
M83513 / 16-C01CP	MK-273-021-325-220R
M83513 / 16-C01CT	MK-273-021-325-000R-0B7
M83513 / 16-C01CW	MK-273-021-325-220R-0B7
M83513 / 16-C01NN	MK-272-021-325-000R
M83513 / 16-C01NP	MK-272-021-325-220R
M83513 / 16-C01NT	MK-272-021-325-000R-0B7
M83513 / 16-C01NW	MK-272-021-325-220R-0B7
M83513 / 16-C01PN	MK-275-021-325-000R
M83513 / 16-C01PP	MK-275-021-325-220R
M83513 / 16-C01PT	MK-275-021-325-000R-0B7
M83513 / 16-C01PW	MK-275-021-325-220R-0B7
M83513 / 16-C02CN	MK-273-021-335-000R
M83513 / 16-C02CP	MK-273-021-335-220R
M83513 / 16-C02CT	MK-273-021-335-000R-0B7
M83513 / 16-C02CW	MK-273-021-335-220R-0B7
M83513 / 16-C02NN	MK-272-021-335-000R
M83513 / 16-C02NP	MK-272-021-335-220R
M83513 / 16-C02NT	MK-272-021-335-000R-0B7
M83513 / 16-C02NW	MK-272-021-335-220R-0B7
M83513 / 16-C02PN	MK-275-021-335-000R
M83513 / 16-C02PP	MK-275-021-335-220R
M83513 / 16-C02PT	MK-275-021-335-000R-0B7
M83513 / 16-C02PW	MK-275-021-335-220R-0B7
M83513 / 16-C03CN	MK-273-021-345-000R
M83513 / 16-C03CP	MK-273-021-345-220R
M83513 / 16-C03CT	MK-273-021-345-000R-0B7
M83513 / 16-C03CW	MK-273-021-345-220R-0B7
M83513 / 16-C03NN	MK-272-021-345-000R
M83513 / 16-C03NP	MK-272-021-345-220R
M83513 / 16-C03NT	MK-272-021-345-000R-0B7
M83513 / 16-C03NW	MK-272-021-345-220R-0B7
M83513 / 16-C03PN	MK-275-021-345-000R
M83513 / 16-C03PP	MK-275-021-345-220R
M83513 / 16-C03PT	MK-275-021-345-000R-0B7
M83513 / 16-C03PW	MK-275-021-345-220R-0B7
M83513 / 16-D01CN	MK-273-025-325-000R
M83513 / 16-D01CP	MK-273-025-325-220R
M83513 / 16-D01CT	MK-273-025-325-000R-0B7
M83513 / 16-D01CW	MK-273-025-325-220R-0B7
M83513 / 16-D01NN	MK-272-025-325-000R
M83513 / 16-D01NP	MK-272-025-325-220R
M83513 / 16-D01NT	MK-272-025-325-000R-0B7
M83513 / 16-D01NW	MK-272-025-325-220R-0B7
M83513 / 16-D01PN	MK-275-025-325-000R
M83513 / 16-D01PP	MK-275-025-325-220R
M83513 / 16-D01PT	MK-275-025-325-000R-0B7
M83513 / 16-D01PW	MK-275-025-325-220R-0B7
M83513 / 16-D02CN	MK-273-025-335-000R
M83513 / 16-D02CP	MK-273-025-335-220R
M83513 / 16-D02CT	MK-273-025-335-000R-0B7
M83513 / 16-D02CW	MK-273-025-335-220R-0B7
M83513 / 16-D02NN	MK-272-025-335-000R
M83513 / 16-D02NP	MK-272-025-335-220R
M83513 / 16-D02NT	MK-272-025-335-000R-0B7
M83513 / 16-D02NW	MK-272-025-335-220R-0B7
M83513 / 16-D02PN	MK-275-025-335-000R
M83513 / 16-D02PP	MK-275-025-335-220R
M83513 / 16-D02PT	MK-275-025-335-000R-0B7
M83513 / 16-D02PW	MK-275-025-335-220R-0B7
M83513 / 16-D03CN	MK-273-025-345-000R
M83513 / 16-D03CP	MK-273-025-345-220R
M83513 / 16-D03CT	MK-273-025-345-000R-0B7
M83513 / 16-D03CW	MK-273-025-345-220R-0B7
M83513 / 16-D03NN	MK-272-025-345-000R
M83513 / 16-D03NP	MK-272-025-345-220R
M83513 / 16-D03NT	MK-272-025-345-000R-0B7
M83513 / 16-D03NW	MK-272-025-345-220R-0B7
M83513 / 16-D03PN	MK-275-025-345-000R
M83513 / 16-D03PP	MK-275-025-345-220R
M83513 / 16-D03PT	MK-275-025-345-000R-0B7
M83513 / 16-D03PW	MK-275-025-345-220R-0B7
M83513 / 16-E01CN	MK-273-031-325-000R
M83513 / 16-E01CP	MK-273-031-325-220R
M83513 / 16-E01CT	MK-273-031-325-000R-0B7
M83513 / 16-E01CW	MK-273-031-325-220R-0B7
M83513 / 16-E01NN	MK-272-031-325-000R
M83513 / 16-E01NP	MK-272-031-325-220R
M83513 / 16-E01NT	MK-272-031-325-000R-0B7
M83513 / 16-E01NW	MK-272-031-325-220R-0B7
M83513 / 16-E01PN	MK-275-031-325-000R
M83513 / 16-E01PP	MK-275-031-325-220R
M83513 / 16-E01PT	MK-275-031-325-000R-0B7
M83513 / 16-E01PW	MK-275-031-325-220R-0B7
M83513 / 16-E02CN	MK-273-031-335-000R
M83513 / 16-E02CP	MK-273-031-335-220R
M83513 / 16-E02CT	MK-273-031-335-000R-0B7
M83513 / 16-E02CW	MK-273-031-335-220R-0B7
M83513 / 16-E02NN	MK-272-031-335-000R
M83513 / 16-E02NP	MK-272-031-335-220R
M83513 / 16-E02NT	MK-272-031-335-000R-0B7
M83513 / 16-E02NW	MK-272-031-335-220R-0B7
M83513 / 16-E02PN	MK-275-031-335-000R
M83513 / 16-E02PP	MK-275-031-335-220R
M83513 / 16-E02PT	MK-275-031-335-000R-0B7
M83513 / 16-E02PW	MK-275-031-335-220R-0B7
M83513 / 16-E03CN	MK-273-031-345-000R
M83513 / 16-E03CP	MK-273-031-345-220R
M83513 / 16-E03CT	MK-273-031-345-000R-0B7
M83513 / 16-E03CW	MK-273-031-345-220R-0B7
M83513 / 16-E03NN	MK-272-031-345-000R
M83513 / 16-E03NP	MK-272-031-345-220R
M83513 / 16-E03NT	MK-272-031-345-000R-0B7
M83513 / 16-E03NW	MK-272-031-345-220R-0B7
M83513 / 16-E03PN	MK-275-031-345-000R
M83513 / 16-E03PP	MK-275-031-345-220R
M83513 / 16-E03PT	MK-275-031-345-000R-0B7
M83513 / 16-E03PW	MK-275-031-345-220R-0B7
M83513 / 16-F01CN	MK-273-037-325-000R
M83513 / 16-F01CP	MK-273-037-325-220R
M83513 / 16-F01CT	MK-273-037-325-000R-0B7
M83513 / 16-F01CW	MK-273-037-325-220R-0B7
M83513 / 16-F01NN	MK-272-037-325-000R
M83513 / 16-F01NP	MK-272-037-325-220R
M83513 / 16-F01NT	MK-272-037-325-000R-0B7
M83513 / 16-F01NW	MK-272-037-325-220R-0B7
M83513 / 16-F01PN	MK-275-037-325-000R
M83513 / 16-F01PP	MK-275-037-325-220R
M83513 / 16-F01PT	MK-275-037-325-000R-0B7
M83513 / 16-F01PW	MK-275-037-325-220R-0B7
M83513 / 16-F02CN	MK-273-037-335-000R
M83513 / 16-F02CP	MK-273-037-335-220R
M83513 / 16-F02CT	MK-273-037-335-000R-0B7
M83513 / 16-F02CW	MK-273-037-335-220R-0B7
M83513 / 16-F02NN	MK-272-037-335-000R
M83513 / 16-F02NP	MK-272-037-335-220R
M83513 / 16-F02NT	MK-272-037-335-000R-0B7
M83513 / 16-F02NW	MK-272-037-335-220R-0B7
M83513 / 16-F02PN	MK-275-037-335-000R
M83513 / 16-F02PP	MK-275-037-335-220R
M83513 / 16-F02PT	MK-275-037-335-000R-0B7
M83513 / 16-F02PW	MK-275-037-335-220R-0B7
M83513 / 16-F03CN	MK-273-037-345-000R
M83513 / 16-F03CP	MK-273-037-345-220R
M83513 / 16-F03CT	MK-273-037-345-000R-0B7
M83513 / 16-F03CW	MK-273-037-345-220R-0B7
M83513 / 16-F03NN	MK-272-037-345-000R
M83513 / 16-F03NP	MK-272-037-345-220R
M83513 / 16-F03NT	MK-272-037-345-000R-0B7
M83513 / 16-F03NW	MK-272-037-345-220R-0B7
M83513 / 16-F03PN	MK-275-037-345-000R
M83513 / 16-F03PP	MK-275-037-345-220R
M83513 / 16-F03PT	MK-275-037-345-000R-0B7
M83513 / 16-F03PW	MK-275-037-345-220R-0B7

AirBorn

Military Cross Reference Chart

→ Continued from previous page

M83513 / 17

M83513 / 17-G01CN	MK-373-051-325-000R	M83513 / 17-G02CN	MK-373-051-335-000R	M83513 / 17-G03CN	MK-373-051-345-000R
M83513 / 17-G01CP	MK-373-051-325-220R	M83513 / 17-G02CP	MK-373-051-335-220R	M83513 / 17-G03CP	MK-373-051-345-220R
M83513 / 17-G01CT	MK-373-051-325-000R-0B7	M83513 / 17-G02CT	MK-373-051-335-000R-0B7	M83513 / 17-G03CT	MK-373-051-345-000R-0B7
M83513 / 17-G01CW	MK-373-051-325-220R-0B7	M83513 / 17-G02CW	MK-373-051-335-220R-0B7	M83513 / 17-G03CW	MK-373-051-345-220R-0B7
M83513 / 17-G01NN	MK-372-051-325-000R	M83513 / 17-G02NN	MK-372-051-335-000R	M83513 / 17-G03NN	MK-372-051-345-000R
M83513 / 17-G01NP	MK-372-051-325-220R	M83513 / 17-G02NP	MK-372-051-335-220R	M83513 / 17-G03NP	MK-372-051-345-220R
M83513 / 17-G01NT	MK-372-051-325-000R-0B7	M83513 / 17-G02NT	MK-372-051-335-000R-0B7	M83513 / 17-G03NT	MK-372-051-345-000R-0B7
M83513 / 17-G01NW	MK-372-051-325-220R-0B7	M83513 / 17-G02NW	MK-372-051-335-220R-0B7	M83513 / 17-G03NW	MK-372-051-345-220R-0B7
M83513 / 17-G01PN	MK-375-051-325-000R	M83513 / 17-G02PN	MK-375-051-335-000R	M83513 / 17-G03PN	MK-375-051-345-000R
M83513 / 17-G01PP	MK-375-051-325-220R	M83513 / 17-G02PP	MK-375-051-335-220R	M83513 / 17-G03PP	MK-375-051-345-220R
M83513 / 17-G01PT	MK-375-051-325-000R-0B7	M83513 / 17-G02PT	MK-375-051-335-000R-0B7	M83513 / 17-G03PT	MK-375-051-345-000R-0B7
M83513 / 17-G01PW	MK-375-051-325-220R-0B7	M83513 / 17-G02PW	MK-375-051-335-220R-0B7	M83513 / 17-G03PW	MK-375-051-345-220R-0B7

M83513 / 18

M83513 / 18-H01CN	MK-473-100-325-000R-05K	M83513 / 18-H02CN	MK-473-100-335-000R-05K	M83513 / 18-H03CN	MK-473-100-345-000R-05K
M83513 / 18-H01CP	MK-473-100-325-620R-05K	M83513 / 18-H02CP	MK-473-100-335-620R-05K	M83513 / 18-H03CP	MK-473-100-345-620R-05K
M83513 / 18-H01CT	MK-473-100-325-000R-0BJ	M83513 / 18-H02CT	MK-473-100-335-000R-0BJ	M83513 / 18-H03CT	MK-473-100-345-000R-0BJ
M83513 / 18-H01CW	MK-473-100-325-620R-0BJ	M83513 / 18-H02CW	MK-473-100-335-620R-0BJ	M83513 / 18-H03CW	MK-473-100-345-620R-0BJ
M83513 / 18-H01NN	MK-472-100-325-000R-05K	M83513 / 18-H02NN	MK-472-100-335-000R-05K	M83513 / 18-H03NN	MK-472-100-345-000R-05K
M83513 / 18-H01NP	MK-472-100-325-620R-05K	M83513 / 18-H02NP	MK-472-100-335-620R-05K	M83513 / 18-H03NP	MK-472-100-345-620R-05K
M83513 / 18-H01NT	MK-472-100-325-000R-0BJ	M83513 / 18-H02NT	MK-472-100-335-000R-0BJ	M83513 / 18-H03NT	MK-472-100-345-000R-0BJ
M83513 / 18-H01NW	MK-472-100-325-620R-0BJ	M83513 / 18-H02NW	MK-472-100-335-620R-0BJ	M83513 / 18-H03NW	MK-472-100-345-620R-0BJ
M83513 / 18-H01PN	MK-475-100-325-000R-05K	M83513 / 18-H02PN	MK-475-100-335-000R-05K	M83513 / 18-H03PN	MK-475-100-345-000R-05K
M83513 / 18-H01PP	MK-475-100-325-620R-05K	M83513 / 18-H02PP	MK-475-100-335-620R-05K	M83513 / 18-H03PP	MK-475-100-345-620R-05K
M83513 / 18-H01PT	MK-475-100-325-000R-0BJ	M83513 / 18-H02PT	MK-475-100-335-000R-0BJ	M83513 / 18-H03PT	MK-475-100-345-000R-0BJ
M83513 / 18-H01PW	MK-475-100-325-620R-0BJ	M83513 / 18-H02PW	MK-475-100-335-620R-0BJ	M83513 / 18-H03PW	MK-475-100-345-620R-0BJ

M83513 / 19

M83513 / 19-A01CN	MK-283-009-435-000R-900	M83513 / 19-A03NN	MK-282-009-455-000R-900	M83513 / 19-B02NW	MK-282-015-445-220R-0B7
M83513 / 19-A01CP	MK-283-009-435-220R-900	M83513 / 19-A03NP	MK-282-009-455-220R-900	M83513 / 19-B02PN	MK-285-015-445-000R-900
M83513 / 19-A01CT	MK-283-009-435-000R-0B7	M83513 / 19-A03NT	MK-282-009-455-000R-0B7	M83513 / 19-B02PP	MK-285-015-445-220R-900
M83513 / 19-A01CW	MK-283-009-435-220R-0B7	M83513 / 19-A03NW	MK-282-009-455-220R-0B7	M83513 / 19-B02PT	MK-285-015-445-000R-0B7
M83513 / 19-A01NN	MK-282-009-435-000R-900	M83513 / 19-A03PN	MK-285-009-455-000R-900	M83513 / 19-B02PW	MK-285-015-445-220R-0B7
M83513 / 19-A01NP	MK-282-009-435-220R-900	M83513 / 19-A03PP	MK-285-009-455-220R-900	M83513 / 19-B03CN	MK-283-015-455-000R-900
M83513 / 19-A01NT	MK-282-009-435-000R-0B7	M83513 / 19-A03PT	MK-285-009-455-000R-0B7	M83513 / 19-B03CP	MK-283-015-455-220R-900
M83513 / 19-A01NW	MK-282-009-435-220R-0B7	M83513 / 19-A03PW	MK-285-009-455-220R-0B7	M83513 / 19-B03CT	MK-283-015-455-000R-0B7
M83513 / 19-A01PN	MK-285-009-435-000R-900			M83513 / 19-B03CW	MK-283-015-455-220R-0B7
M83513 / 19-A01PP	MK-285-009-435-220R-900	M83513 / 19-B01CN	MK-283-015-435-000R-900	M83513 / 19-B03NN	MK-282-015-455-000R-900
M83513 / 19-A01PT	MK-285-009-435-000R-0B7	M83513 / 19-B01CP	MK-283-015-435-220R-900	M83513 / 19-B03NP	MK-282-015-455-220R-900
M83513 / 19-A01PW	MK-285-009-435-220R-0B7	M83513 / 19-B01CT	MK-283-015-435-000R-0B7	M83513 / 19-B03NT	MK-282-015-455-000R-0B7
M83513 / 19-A02CN	MK-283-009-445-000R-900	M83513 / 19-B01CW	MK-283-015-435-220R-0B7	M83513 / 19-B03NW	MK-282-015-455-220R-0B7
M83513 / 19-A02CP	MK-283-009-445-220R-900	M83513 / 19-B01NN	MK-282-015-435-000R-900	M83513 / 19-B03PN	MK-285-015-455-000R-900
M83513 / 19-A02CT	MK-283-009-445-000R-0B7	M83513 / 19-B01NP	MK-282-015-435-220R-900	M83513 / 19-B03PP	MK-285-015-455-220R-900
M83513 / 19-A02CW	MK-283-009-445-220R-0B7	M83513 / 19-B01NT	MK-282-015-435-000R-0B7	M83513 / 19-B03PT	MK-285-015-455-000R-0B7
M83513 / 19-A02NN	MK-282-009-445-000R-900	M83513 / 19-B01NW	MK-282-015-435-220R-0B7	M83513 / 19-B03PW	MK-285-015-455-220R-0B7
M83513 / 19-A02NP	MK-282-009-445-220R-900	M83513 / 19-B01PN	MK-285-015-435-000R-900		
M83513 / 19-A02NT	MK-282-009-445-000R-0B7	M83513 / 19-B01PP	MK-285-015-435-220R-900	M83513 / 19-C01CN	MK-283-021-435-000R-900
M83513 / 19-A02NW	MK-282-009-445-220R-0B7	M83513 / 19-B01PT	MK-285-015-435-000R-0B7	M83513 / 19-C01CP	MK-283-021-435-220R-900
M83513 / 19-A02PN	MK-285-009-445-000R-900	M83513 / 19-B01PW	MK-285-015-435-220R-0B7	M83513 / 19-C01CT	MK-283-021-435-000R-0B7
M83513 / 19-A02PP	MK-285-009-445-220R-900	M83513 / 19-B02CN	MK-283-015-445-000R-900	M83513 / 19-C01CW	MK-283-021-435-220R-0B7
M83513 / 19-A02PT	MK-285-009-445-000R-0B7	M83513 / 19-B02CP	MK-283-015-445-220R-900	M83513 / 19-C01NN	MK-282-021-435-000R-900
M83513 / 19-A02PW	MK-285-009-445-220R-0B7	M83513 / 19-B02CT	MK-283-015-445-000R-0B7	M83513 / 19-C01NP	MK-282-021-435-220R-900
M83513 / 19-A03CN	MK-283-009-455-000R-900	M83513 / 19-B02CW	MK-283-015-445-220R-0B7	M83513 / 19-C01NT	MK-282-021-435-000R-0B7
M83513 / 19-A03CP	MK-283-009-455-220R-900	M83513 / 19-B02NN	MK-282-015-445-000R-900	M83513 / 19-C01NW	MK-282-021-435-220R-0B7
M83513 / 19-A03CT	MK-283-009-455-000R-0B7	M83513 / 19-B02NP	MK-282-015-445-220R-900	M83513 / 19-C01PN	MK-285-021-435-000R-900
M83513 / 19-A03CW	MK-283-009-455-220R-0B7	M83513 / 19-B02NT	MK-282-015-445-000R-0B7	M83513 / 19-C01PP	MK-285-021-435-220R-900

Military Cross Reference Chart

– Continued from previous page

M83513 / 19 (continued)

M83513 / 19-C01PT	MK-285-021-435-000R-0B7
M83513 / 19-C01PW	MK-285-021-435-220R-0B7
M83513 / 19-C02CN	MK-283-021-445-000R-900
M83513 / 19-C02CP	MK-283-021-445-220R-900
M83513 / 19-C02CT	MK-283-021-445-000R-0B7
M83513 / 19-C02CW	MK-283-021-445-220R-0B7
M83513 / 19-C02NN	MK-282-021-445-000R-900
M83513 / 19-C02NP	MK-282-021-445-220R-900
M83513 / 19-C02NT	MK-282-021-445-000R-0B7
M83513 / 19-C02NW	MK-282-021-445-220R-0B7
M83513 / 19-C02PN	MK-285-021-445-000R-900
M83513 / 19-C02PP	MK-285-021-445-220R-900
M83513 / 19-C02PT	MK-285-021-445-000R-0B7
M83513 / 19-C02PW	MK-285-021-445-220R-0B7
M83513 / 19-C03CN	MK-283-021-455-000R-900
M83513 / 19-C03CP	MK-283-021-455-220R-900
M83513 / 19-C03CT	MK-283-021-455-000R-0B7
M83513 / 19-C03CW	MK-283-021-455-220R-0B7
M83513 / 19-C03NN	MK-282-021-455-000R-900
M83513 / 19-C03NP	MK-282-021-455-220R-900
M83513 / 19-C03NT	MK-282-021-455-000R-0B7
M83513 / 19-C03NW	MK-282-021-455-220R-0B7
M83513 / 19-C03PN	MK-285-021-455-000R-900
M83513 / 19-C03PP	MK-285-021-455-220R-900
M83513 / 19-C03PT	MK-285-021-455-000R-0B7
M83513 / 19-C03PW	MK-285-021-455-220R-0B7
M83513 / 19-D01CN	MK-283-025-435-000R-900
M83513 / 19-D01CP	MK-283-025-435-220R-900
M83513 / 19-D01CT	MK-283-025-435-000R-0B7
M83513 / 19-D01CW	MK-283-025-435-220R-0B7
M83513 / 19-D01NN	MK-282-025-435-000R-900
M83513 / 19-D01NP	MK-282-025-435-220R-900
M83513 / 19-D01NT	MK-282-025-435-000R-0B7
M83513 / 19-D01NW	MK-282-025-435-220R-0B7
M83513 / 19-D01PN	MK-285-025-435-000R-900
M83513 / 19-D01PP	MK-285-025-435-220R-900
M83513 / 19-D01PT	MK-285-025-435-000R-0B7
M83513 / 19-D01PW	MK-285-025-435-220R-0B7
M83513 / 19-D02CN	MK-283-025-445-000R-900
M83513 / 19-D02CP	MK-283-025-445-220R-900
M83513 / 19-D02CT	MK-283-025-445-000R-0B7
M83513 / 19-D02CW	MK-283-025-445-220R-0B7
M83513 / 19-D02NN	MK-282-025-445-000R-900
M83513 / 19-D02NP	MK-282-025-445-220R-900
M83513 / 19-D02NT	MK-282-025-445-000R-0B7
M83513 / 19-D02NW	MK-282-025-445-220R-0B7
M83513 / 19-D02PN	MK-285-025-445-000R-900
M83513 / 19-D02PP	MK-285-025-445-220R-900
M83513 / 19-D02PT	MK-285-025-445-000R-0B7
M83513 / 19-D02PW	MK-285-025-445-220R-0B7
M83513 / 19-D03CN	MK-283-025-455-000R-900
M83513 / 19-D03CP	MK-283-025-455-220R-900
M83513 / 19-D03CT	MK-283-025-455-000R-0B7
M83513 / 19-D03CW	MK-283-025-455-220R-0B7
M83513 / 19-D03NN	MK-282-025-455-000R-900
M83513 / 19-D03NP	MK-282-025-455-220R-900
M83513 / 19-D03NT	MK-282-025-455-000R-0B7
M83513 / 19-D03NW	MK-282-025-455-220R-0B7
M83513 / 19-D03PN	MK-285-025-455-000R-900
M83513 / 19-D03PP	MK-285-025-455-220R-900
M83513 / 19-D03PT	MK-285-025-455-000R-0B7
M83513 / 19-D03PW	MK-285-025-455-220R-0B7
M83513 / 19-E01CN	MK-283-031-435-000R-900
M83513 / 19-E01CP	MK-283-031-435-220R-900
M83513 / 19-E01CT	MK-283-031-435-000R-0B7
M83513 / 19-E01CW	MK-283-031-435-220R-0B7
M83513 / 19-E01NN	MK-282-031-435-000R-900
M83513 / 19-E01NP	MK-282-031-435-220R-900
M83513 / 19-E01NT	MK-282-031-435-000R-0B7
M83513 / 19-E01NW	MK-282-031-435-220R-0B7
M83513 / 19-E01PN	MK-285-031-435-000R-900
M83513 / 19-E01PP	MK-285-031-435-220R-900
M83513 / 19-E01PT	MK-285-031-435-000R-0B7
M83513 / 19-E01PW	MK-285-031-435-220R-0B7
M83513 / 19-E02CN	MK-283-031-445-000R-900
M83513 / 19-E02CP	MK-283-031-445-220R-900
M83513 / 19-E02CT	MK-283-031-445-000R-0B7
M83513 / 19-E02CW	MK-283-031-445-220R-0B7
M83513 / 19-E02NN	MK-282-031-445-000R-900
M83513 / 19-E02NP	MK-282-031-445-220R-900
M83513 / 19-E02NT	MK-282-031-445-000R-0B7
M83513 / 19-E02NW	MK-282-031-445-220R-0B7
M83513 / 19-E02PN	MK-285-031-445-000R-900
M83513 / 19-E02PP	MK-285-031-445-220R-900
M83513 / 19-E02PT	MK-285-031-445-000R-0B7
M83513 / 19-E02PW	MK-285-031-445-220R-0B7
M83513 / 19-E03CN	MK-283-031-455-000R-900
M83513 / 19-E03CP	MK-283-031-455-220R-900
M83513 / 19-E03CT	MK-283-031-455-000R-0B7
M83513 / 19-E03CW	MK-283-031-455-220R-0B7
M83513 / 19-E03NN	MK-282-031-455-000R-900
M83513 / 19-E03NP	MK-282-031-455-220R-900
M83513 / 19-E03NT	MK-282-031-455-000R-0B7
M83513 / 19-E03NW	MK-282-031-455-220R-0B7
M83513 / 19-E03PN	MK-285-031-455-000R-900
M83513 / 19-E03PP	MK-285-031-455-220R-900
M83513 / 19-E03PT	MK-285-031-455-000R-0B7
M83513 / 19-E03PW	MK-285-031-455-220R-0B7
M83513 / 19-F01CN	MK-283-037-435-000R-900
M83513 / 19-F01CP	MK-283-037-435-220R-900
M83513 / 19-F01CT	MK-283-037-435-000R-0B7
M83513 / 19-F01CW	MK-283-037-435-220R-0B7
M83513 / 19-F01NN	MK-282-037-435-000R-900
M83513 / 19-F01NP	MK-282-037-435-220R-900
M83513 / 19-F01NT	MK-282-037-435-000R-0B7
M83513 / 19-F01NW	MK-282-037-435-220R-0B7
M83513 / 19-F01PN	MK-285-037-435-000R-900
M83513 / 19-F01PP	MK-285-037-435-220R-900
M83513 / 19-F01PT	MK-285-037-435-000R-0B7
M83513 / 19-F01PW	MK-285-037-435-220R-0B7
M83513 / 19-F02CN	MK-283-037-445-000R-900
M83513 / 19-F02CP	MK-283-037-445-220R-900
M83513 / 19-F02CT	MK-283-037-445-000R-0B7
M83513 / 19-F02CW	MK-283-037-445-220R-0B7
M83513 / 19-F02NN	MK-282-037-445-000R-900
M83513 / 19-F02NP	MK-282-037-445-220R-900
M83513 / 19-F02NT	MK-282-037-445-000R-0B7
M83513 / 19-F02NW	MK-282-037-445-220R-0B7
M83513 / 19-F02PN	MK-285-037-445-000R-900
M83513 / 19-F02PP	MK-285-037-445-220R-900
M83513 / 19-F02PT	MK-285-037-445-000R-0B7
M83513 / 19-F02PW	MK-285-037-445-220R-0B7
M83513 / 19-F03CN	MK-283-037-455-000R-900
M83513 / 19-F03CP	MK-283-037-455-220R-900
M83513 / 19-F03CT	MK-283-037-455-000R-0B7
M83513 / 19-F03CW	MK-283-037-455-220R-0B7
M83513 / 19-F03NN	MK-282-037-455-000R-900
M83513 / 19-F03NP	MK-282-037-455-220R-900
M83513 / 19-F03NT	MK-282-037-455-000R-0B7
M83513 / 19-F03NW	MK-282-037-455-220R-0B7
M83513 / 19-F03PN	MK-285-037-455-000R-900
M83513 / 19-F03PP	MK-285-037-455-220R-900
M83513 / 19-F03PT	MK-285-037-455-000R-0B7
M83513 / 19-F03PW	MK-285-037-455-220R-0B7

M83513 / 20

M83513 / 20-G01CN	MK-383-051-435-000R-900
M83513 / 20-G01CP	MK-383-051-435-220R-900
M83513 / 20-G01CT	MK-383-051-435-000R-0B7
M83513 / 20-G01CW	MK-383-051-435-220R-0B7
M83513 / 20-G01NN	MK-382-051-435-000R-900
M83513 / 20-G01NP	MK-382-051-435-220R-900
M83513 / 20-G01NT	MK-382-051-435-000R-0B7
M83513 / 20-G01NW	MK-382-051-435-220R-0B7
M83513 / 20-G01PN	MK-385-051-435-000R-900
M83513 / 20-G01PP	MK-385-051-435-220R-900
M83513 / 20-G01PT	MK-385-051-435-000R-0B7
M83513 / 20-G01PW	MK-385-051-435-220R-0B7
M83513 / 20-G02CN	MK-383-051-445-000R-900
M83513 / 20-G02CP	MK-383-051-445-220R-900
M83513 / 20-G02CT	MK-383-051-445-000R-0B7
M83513 / 20-G02CW	MK-383-051-445-220R-0B7
M83513 / 20-G02NN	MK-382-051-445-000R-900
M83513 / 20-G02NP	MK-382-051-445-220R-900
M83513 / 20-G02NT	MK-382-051-445-000R-0B7
M83513 / 20-G02NW	MK-382-051-445-220R-0B7
M83513 / 20-G02PN	MK-385-051-445-000R-900
M83513 / 20-G02PP	MK-385-051-445-220R-900
M83513 / 20-G02PT	MK-385-051-445-000R-0B7
M83513 / 20-G02PW	MK-385-051-445-220R-0B7

AirBorn

Military Cross Reference Chart

– Continued from previous page

M83513 / 20 (continued)

M83513 / 20-G03CN	MK-383-051-455-000R-900	M83513 / 20-G03NN	MK-382-051-455-000R-900	M83513 / 20-G03PN	MK-385-051-455-000R-900
M83513 / 20-G03CP	MK-383-051-455-220R-900	M83513 / 20-G03NP	MK-382-051-455-220R-900	M83513 / 20-G03PP	MK-385-051-455-220R-900
M83513 / 20-G03CT	MK-383-051-455-000R-0B7	M83513 / 20-G03NT	MK-382-051-455-000R-0B7	M83513 / 20-G03PT	MK-385-051-455-000R-0B7
M83513 / 20-G03CW	MK-383-051-455-220R-0B7	M83513 / 20-G03NW	MK-382-051-455-220R-0B7	M83513 / 20-G03PW	MK-385-051-455-220R-0B7

M83513 / 21

M83513 / 21-H01CN	MK-483-100-435-000R-05K	M83513 / 21-H02CN	MK-483-100-445-000R-05K	M83513 / 21-H03CN	MK-483-100-455-000R-05K
M83513 / 21-H01CP	MK-483-100-435-620R-05K	M83513 / 21-H02CP	MK-483-100-445-620R-05K	M83513 / 21-H03CP	MK-483-100-455-620R-05K
M83513 / 21-H01CT	MK-483-100-435-000R-0BJ	M83513 / 21-H02CT	MK-483-100-445-000R-0BJ	M83513 / 21-H03CT	MK-483-100-455-000R-0BJ
M83513 / 21-H01CW	MK-483-100-435-620R-0BJ	M83513 / 21-H02CW	MK-483-100-445-620R-0BJ	M83513 / 21-H03CW	MK-483-100-455-620R-0BJ
M83513 / 21-H01NN	MK-482-100-435-000R-05K	M83513 / 21-H02NN	MK-482-100-445-000R-05K	M83513 / 21-H03NN	MK-482-100-455-000R-05K
M83513 / 21-H01NP	MK-482-100-435-620R-05K	M83513 / 21-H02NP	MK-482-100-445-620R-05K	M83513 / 21-H03NP	MK-482-100-455-620R-05K
M83513 / 21-H01NT	MK-482-100-435-000R-0BJ	M83513 / 21-H02NT	MK-482-100-445-000R-0BJ	M83513 / 21-H03NT	MK-482-100-455-000R-0BJ
M83513 / 21-H01NW	MK-482-100-435-620R-0BJ	M83513 / 21-H02NW	MK-482-100-445-620R-0BJ	M83513 / 21-H03NW	MK-482-100-455-620R-0BJ
M83513 / 21-H01PN	MK-485-100-435-000R-05K	M83513 / 21-H02PN	MK-485-100-445-000R-05K	M83513 / 21-H03PN	MK-485-100-455-000R-05K
M83513 / 21-H01PP	MK-485-100-435-620R-05K	M83513 / 21-H02PP	MK-485-100-445-620R-05K	M83513 / 21-H03PP	MK-485-100-455-620R-05K
M83513 / 21-H01PT	MK-485-100-435-000R-0BJ	M83513 / 21-H02PT	MK-485-100-445-000R-0BJ	M83513 / 21-H03PT	MK-485-100-455-000R-0BJ
M83513 / 21-H01PW	MK-485-100-435-620R-0BJ	M83513 / 21-H02PW	MK-485-100-445-620R-0BJ	M83513 / 21-H03PW	MK-485-100-455-620R-0BJ

M83513 / 22

M83513 / 22-A01CN	MK-213-009-125-0000	M83513 / 22-A03PW	MK-215-009-145-2200-0B7	M83513 / 22-B03PP	MK-215-015-145-2200
M83513 / 22-A01CP	MK-213-009-125-2200			M83513 / 22-B03PT	MK-215-015-145-0000-0B7
M83513 / 22-A01CT	MK-213-009-125-0000-0B7	M83513 / 22-B01CN	MK-213-015-125-0000	M83513 / 22-B03PW	MK-215-015-145-2200-0B7
M83513 / 22-A01CW	MK-213-009-125-2200-0B7	M83513 / 22-B01CP	MK-213-015-125-2200		
M83513 / 22-A01NN	MK-212-009-125-0000	M83513 / 22-B01CT	MK-213-015-125-0000-0B7	M83513 / 22-C01CN	MK-213-021-125-0000
M83513 / 22-A01NP	MK-212-009-125-2200	M83513 / 22-B01CW	MK-213-015-125-2200-0B7	M83513 / 22-C01CP	MK-213-021-125-2200
M83513 / 22-A01NT	MK-212-009-125-0000-0B7	M83513 / 22-B01NN	MK-212-015-125-0000	M83513 / 22-C01CT	MK-213-021-125-0000-0B7
M83513 / 22-A01NW	MK-212-009-125-2200-0B7	M83513 / 22-B01NP	MK-212-015-125-2200	M83513 / 22-C01CW	MK-213-021-125-2200-0B7
M83513 / 22-A01PN	MK-215-009-125-0000	M83513 / 22-B01NT	MK-212-015-125-0000-0B7	M83513 / 22-C01NN	MK-212-021-125-0000
M83513 / 22-A01PP	MK-215-009-125-2200	M83513 / 22-B01NW	MK-212-015-125-2200-0B7	M83513 / 22-C01NP	MK-212-021-125-2200
M83513 / 22-A01PT	MK-215-009-125-0000-0B7	M83513 / 22-B01PN	MK-215-015-125-0000	M83513 / 22-C01NT	MK-212-021-125-0000-0B7
M83513 / 22-A01PW	MK-215-009-125-2200-0B7	M83513 / 22-B01PP	MK-215-015-125-2200	M83513 / 22-C01NW	MK-212-021-125-2200-0B7
M83513 / 22-A02CN	MK-213-009-135-0000	M83513 / 22-B01PT	MK-215-015-125-0000-0B7	M83513 / 22-C01PN	MK-215-021-125-0000
M83513 / 22-A02CP	MK-213-009-135-2200	M83513 / 22-B01PW	MK-215-015-125-2200-0B7	M83513 / 22-C01PP	MK-215-021-125-2200
M83513 / 22-A02CT	MK-213-009-135-0000-0B7	M83513 / 22-B02CN	MK-213-015-135-0000	M83513 / 22-C01PT	MK-215-021-125-0000-0B7
M83513 / 22-A02CW	MK-213-009-135-2200-0B7	M83513 / 22-B02CP	MK-213-015-135-2200	M83513 / 22-C01PW	MK-215-021-125-2200-0B7
M83513 / 22-A02NN	MK-212-009-135-0000	M83513 / 22-B02CT	MK-213-015-135-0000-0B7	M83513 / 22-C02CN	MK-213-021-135-0000
M83513 / 22-A02NP	MK-212-009-135-2200	M83513 / 22-B02CW	MK-213-015-135-2200-0B7	M83513 / 22-C02CP	MK-213-021-135-2200
M83513 / 22-A02NT	MK-212-009-135-0000-0B7	M83513 / 22-B02NN	MK-212-015-135-0000	M83513 / 22-C02CT	MK-213-021-135-0000-0B7
M83513 / 22-A02NW	MK-212-009-135-2200-0B7	M83513 / 22-B02NP	MK-212-015-135-2200	M83513 / 22-C02CW	MK-213-021-135-2200-0B7
M83513 / 22-A02PN	MK-215-009-135-0000	M83513 / 22-B02NT	MK-212-015-135-0000-0B7	M83513 / 22-C02NN	MK-212-021-135-0000
M83513 / 22-A02PP	MK-215-009-135-2200	M83513 / 22-B02NW	MK-212-015-135-2200-0B7	M83513 / 22-C02NP	MK-212-021-135-2200
M83513 / 22-A02PT	MK-215-009-135-0000-0B7	M83513 / 22-B02PN	MK-215-015-135-0000	M83513 / 22-C02NT	MK-212-021-135-0000-0B7
M83513 / 22-A02PW	MK-215-009-135-2200-0B7	M83513 / 22-B02PP	MK-215-015-135-2200	M83513 / 22-C02NW	MK-212-021-135-2200-0B7
M83513 / 22-A03CN	MK-213-009-145-0000	M83513 / 22-B02PT	MK-215-015-135-0000-0B7	M83513 / 22-C02PN	MK-215-021-135-0000
M83513 / 22-A03CP	MK-213-009-145-2200	M83513 / 22-B02PW	MK-215-015-135-2200-0B7	M83513 / 22-C02PP	MK-215-021-135-2200
M83513 / 22-A03CT	MK-213-009-145-0000-0B7	M83513 / 22-B03CN	MK-213-015-145-0000	M83513 / 22-C02PT	MK-215-021-135-0000-0B7
M83513 / 22-A03CW	MK-213-009-145-2200-0B7	M83513 / 22-B03CP	MK-213-015-145-2200	M83513 / 22-C02PW	MK-215-021-135-2200-0B7
M83513 / 22-A03NN	MK-212-009-145-0000	M83513 / 22-B03CT	MK-213-015-145-0000-0B7	M83513 / 22-C03CN	MK-213-021-145-0000
M83513 / 22-A03NP	MK-212-009-145-2200	M83513 / 22-B03CW	MK-213-015-145-2200-0B7	M83513 / 22-C03CP	MK-213-021-145-2200
M83513 / 22-A03NT	MK-212-009-145-0000-0B7	M83513 / 22-B03NN	MK-212-015-145-0000	M83513 / 22-C03CT	MK-213-021-145-0000-0B7
M83513 / 22-A03NW	MK-212-009-145-2200-0B7	M83513 / 22-B03NP	MK-212-015-145-2200	M83513 / 22-C03CW	MK-213-021-145-2200-0B7
M83513 / 22-A03PN	MK-215-009-145-0000	M83513 / 22-B03NT	MK-212-015-145-0000-0B7	M83513 / 22-C03NN	MK-212-021-145-0000
M83513 / 22-A03PP	MK-215-009-145-2200	M83513 / 22-B03NW	MK-212-015-145-2200-0B7	M83513 / 22-C03NP	MK-212-021-145-2200
M83513 / 22-A03PT	MK-215-009-145-0000-0B7	M83513 / 22-B03PN	MK-215-015-145-0000	M83513 / 22-C03NT	MK-212-021-145-0000-0B7

Military Cross Reference Chart

– Continued from previous page

M83513 / 22 (continued)

M83513 / 22-C03NW	MK-212-021-145-2200-0B7
M83513 / 22-C03PN	MK-215-021-145-0000
M83513 / 22-C03PP	MK-215-021-145-2200
M83513 / 22-C03PT	MK-215-021-145-0000-0B7
M83513 / 22-C03PW	MK-215-021-145-2200-0B7
M83513 / 22-D01CN	MK-213-025-125-0000
M83513 / 22-D01CP	MK-213-025-125-2200
M83513 / 22-D01CT	MK-213-025-125-0000-0B7
M83513 / 22-D01CW	MK-213-025-125-2200-0B7
M83513 / 22-D01NN	MK-212-025-125-0000
M83513 / 22-D01NP	MK-212-025-125-2200
M83513 / 22-D01NT	MK-212-025-125-0000-0B7
M83513 / 22-D01NW	MK-212-025-125-2200-0B7
M83513 / 22-D01PN	MK-215-025-125-0000
M83513 / 22-D01PP	MK-215-025-125-2200
M83513 / 22-D01PT	MK-215-025-125-0000-0B7
M83513 / 22-D01PW	MK-215-025-125-2200-0B7
M83513 / 22-D02CN	MK-213-025-135-0000
M83513 / 22-D02CP	MK-213-025-135-2200
M83513 / 22-D02CT	MK-213-025-135-0000-0B7
M83513 / 22-D02CW	MK-213-025-135-2200-0B7
M83513 / 22-D02NN	MK-212-025-135-0000
M83513 / 22-D02NP	MK-212-025-135-2200
M83513 / 22-D02NT	MK-212-025-135-0000-0B7
M83513 / 22-D02NW	MK-212-025-135-2200-0B7
M83513 / 22-D02PN	MK-215-025-135-0000
M83513 / 22-D02PP	MK-215-025-135-2200
M83513 / 22-D02PT	MK-215-025-135-0000-0B7
M83513 / 22-D02PW	MK-215-025-135-2200-0B7
M83513 / 22-D03CN	MK-213-025-145-0000
M83513 / 22-D03CP	MK-213-025-145-2200
M83513 / 22-D03CT	MK-213-025-145-0000-0B7
M83513 / 22-D03CW	MK-213-025-145-2200-0B7
M83513 / 22-D03NN	MK-212-025-145-0000
M83513 / 22-D03NP	MK-212-025-145-2200
M83513 / 22-D03NT	MK-212-025-145-0000-0B7
M83513 / 22-D03NW	MK-212-025-145-2200-0B7
M83513 / 22-D03PN	MK-215-025-145-0000
M83513 / 22-D03PP	MK-215-025-145-2200
M83513 / 22-D03PT	MK-215-025-145-0000-0B7
M83513 / 22-D03PW	MK-215-025-145-2200-0B7
M83513 / 22-E01CN	MK-213-031-125-0000
M83513 / 22-E01CP	MK-213-031-125-2200
M83513 / 22-E01CT	MK-213-031-125-0000-0B7
M83513 / 22-E01CW	MK-213-031-125-2200-0B7
M83513 / 22-E01NN	MK-212-031-125-0000
M83513 / 22-E01NP	MK-212-031-125-2200
M83513 / 22-E01NT	MK-212-031-125-0000-0B7
M83513 / 22-E01NW	MK-212-031-125-2200-0B7
M83513 / 22-E01PN	MK-215-031-125-0000
M83513 / 22-E01PP	MK-215-031-125-2200
M83513 / 22-E01PT	MK-215-031-125-0000-0B7
M83513 / 22-E01PW	MK-215-031-125-2200-0B7
M83513 / 22-E02CN	MK-213-031-135-0000
M83513 / 22-E02CP	MK-213-031-135-2200
M83513 / 22-E02CT	MK-213-031-135-0000-0B7
M83513 / 22-E02CW	MK-213-031-135-2200-0B7
M83513 / 22-E02NN	MK-212-031-135-0000
M83513 / 22-E02NP	MK-212-031-135-2200
M83513 / 22-E02NT	MK-212-031-135-0000-0B7
M83513 / 22-E02NW	MK-212-031-135-2200-0B7
M83513 / 22-E02PN	MK-215-031-135-0000
M83513 / 22-E02PP	MK-215-031-135-2200
M83513 / 22-E02PT	MK-215-031-135-0000-0B7
M83513 / 22-E02PW	MK-215-031-135-2200-0B7
M83513 / 22-E03CN	MK-213-031-145-0000
M83513 / 22-E03CP	MK-213-031-145-2200
M83513 / 22-E03CT	MK-213-031-145-0000-0B7
M83513 / 22-E03CW	MK-213-031-145-2200-0B7
M83513 / 22-E03NN	MK-212-031-145-0000
M83513 / 22-E03NP	MK-212-031-145-2200
M83513 / 22-E03NT	MK-212-031-145-0000-0B7
M83513 / 22-E03NW	MK-212-031-145-2200-0B7
M83513 / 22-E03PN	MK-215-031-145-0000
M83513 / 22-E03PP	MK-215-031-145-2200
M83513 / 22-E03PT	MK-215-031-145-0000-0B7
M83513 / 22-E03PW	MK-215-031-145-2200-0B7
M83513 / 22-F01CN	MK-213-037-125-0000
M83513 / 22-F01CP	MK-213-037-125-2200
M83513 / 22-F01CT	MK-213-037-125-0000-0B7
M83513 / 22-F01CW	MK-213-037-125-2200-0B7
M83513 / 22-F01NN	MK-212-037-125-0000
M83513 / 22-F01NP	MK-212-037-125-2200
M83513 / 22-F01NT	MK-212-037-125-0000-0B7
M83513 / 22-F01NW	MK-212-037-125-2200-0B7
M83513 / 22-F01PN	MK-215-037-125-0000
M83513 / 22-F01PP	MK-215-037-125-2200
M83513 / 22-F01PT	MK-215-037-125-0000-0B7
M83513 / 22-F01PW	MK-215-037-125-2200-0B7
M83513 / 22-F02CN	MK-213-037-135-0000
M83513 / 22-F02CP	MK-213-037-135-2200
M83513 / 22-F02CT	MK-213-037-135-0000-0B7
M83513 / 22-F02CW	MK-213-037-135-2200-0B7
M83513 / 22-F02NN	MK-212-037-135-0000
M83513 / 22-F02NP	MK-212-037-135-2200
M83513 / 22-F02NT	MK-212-037-135-0000-0B7
M83513 / 22-F02NW	MK-212-037-135-2200-0B7
M83513 / 22-F02PN	MK-215-037-135-0000
M83513 / 22-F02PP	MK-215-037-135-2200
M83513 / 22-F02PT	MK-215-037-135-0000-0B7
M83513 / 22-F02PW	MK-215-037-135-2200-0B7
M83513 / 22-F03CN	MK-213-037-145-0000
M83513 / 22-F03CP	MK-213-037-145-2200
M83513 / 22-F03CT	MK-213-037-145-0000-0B7
M83513 / 22-F03CW	MK-213-037-145-2200-0B7
M83513 / 22-F03NN	MK-212-037-145-0000
M83513 / 22-F03NP	MK-212-037-145-2200
M83513 / 22-F03NT	MK-212-037-145-0000-0B7
M83513 / 22-F03NW	MK-212-037-145-2200-0B7
M83513 / 22-F03PN	MK-215-037-145-0000
M83513 / 22-F03PP	MK-215-037-145-2200
M83513 / 22-F03PT	MK-215-037-145-0000-0B7
M83513 / 22-F03PW	MK-215-037-145-2200-0B7

M83513 / 23

M83513 / 23-G01CN	MK-313-051-125-0000
M83513 / 23-G01CP	MK-313-051-125-2200
M83513 / 23-G01CT	MK-313-051-125-0000-0B7
M83513 / 23-G01CW	MK-313-051-125-2200-0B7
M83513 / 23-G01NN	MK-312-051-125-0000
M83513 / 23-G01NP	MK-312-051-125-2200
M83513 / 23-G01NT	MK-312-051-125-0000-0B7
M83513 / 23-G01NW	MK-312-051-125-2200-0B7
M83513 / 23-G01PN	MK-315-051-125-0000
M83513 / 23-G01PP	MK-315-051-125-2200
M83513 / 23-G01PT	MK-315-051-125-0000-0B7
M83513 / 23-G01PW	MK-315-051-125-2200-0B7
M83513 / 23-G02CN	MK-313-051-135-0000
M83513 / 23-G02CP	MK-313-051-135-2200
M83513 / 23-G02CT	MK-313-051-135-0000-0B7
M83513 / 23-G02CW	MK-313-051-135-2200-0B7
M83513 / 23-G02NN	MK-312-051-135-0000
M83513 / 23-G02NP	MK-312-051-135-2200
M83513 / 23-G02NT	MK-312-051-135-0000-0B7
M83513 / 23-G02NW	MK-312-051-135-2200-0B7
M83513 / 23-G02PN	MK-315-051-135-0000
M83513 / 23-G02PP	MK-315-051-135-2200
M83513 / 23-G02PT	MK-315-051-135-0000-0B7
M83513 / 23-G02PW	MK-315-051-135-2200-0B7
M83513 / 23-G03CN	MK-313-051-145-0000
M83513 / 23-G03CP	MK-313-051-145-2200
M83513 / 23-G03CT	MK-313-051-145-0000-0B7
M83513 / 23-G03CW	MK-313-051-145-2200-0B7
M83513 / 23-G03NN	MK-312-051-145-0000
M83513 / 23-G03NP	MK-312-051-145-2200
M83513 / 23-G03NT	MK-312-051-145-0000-0B7
M83513 / 23-G03NW	MK-312-051-145-2200-0B7
M83513 / 23-G03PN	MK-315-051-145-0000
M83513 / 23-G03PP	MK-315-051-145-2200
M83513 / 23-G03PT	MK-315-051-145-0000-0B7
M83513 / 23-G03PW	MK-315-051-145-2200-0B7

AirBorn

Military Cross Reference Chart

-- Continued from previous page

M83513 / 24

M83513 / 24-H01CN	MK-413-100-125-0000	M83513 / 24-H02CN	MK-413-100-135-0000	M83513 / 24-H03CN	MK-413-100-145-0000
M83513 / 24-H01CP	MK-413-100-125-6200	M83513 / 24-H02CP	MK-413-100-135-6200	M83513 / 24-H03CP	MK-413-100-145-6200
M83513 / 24-H01CT	MK-413-100-125-0000-0B7	M83513 / 24-H02CT	MK-413-100-135-0000-0B7	M83513 / 24-H03CT	MK-413-100-145-0000-0B7
M83513 / 24-H01CW	MK-413-100-125-6200-0B7	M83513 / 24-H02CW	MK-413-100-135-6200-0B7	M83513 / 24-H03CW	MK-413-100-145-6200-0B7
M83513 / 24-H01NN	MK-412-100-125-0000	M83513 / 24-H02NN	MK-412-100-135-0000	M83513 / 24-H03NN	MK-412-100-145-0000
M83513 / 24-H01NP	MK-412-100-125-6200	M83513 / 24-H02NP	MK-412-100-135-6200	M83513 / 24-H03NP	MK-412-100-145-6200
M83513 / 24-H01NT	MK-412-100-125-0000-0B7	M83513 / 24-H02NT	MK-412-100-135-0000-0B7	M83513 / 24-H03NT	MK-412-100-145-0000-0B7
M83513 / 24-H01NW	MK-412-100-125-6200-0B7	M83513 / 24-H02NW	MK-412-100-135-6200-0B7	M83513 / 24-H03NW	MK-412-100-145-6200-0B7
M83513 / 24-H01PN	MK-415-100-125-0000	M83513 / 24-H02PN	MK-415-100-135-0000	M83513 / 24-H03PN	MK-415-100-145-0000
M83513 / 24-H01PP	MK-415-100-125-6200	M83513 / 24-H02PP	MK-415-100-135-6200	M83513 / 24-H03PP	MK-415-100-145-6200
M83513 / 24-H01PT	MK-415-100-125-0000-0B7	M83513 / 24-H02PT	MK-415-100-135-0000-0B7	M83513 / 24-H03PT	MK-415-100-145-0000-0B7
M83513 / 24-H01PW	MK-415-100-125-6200-0B7	M83513 / 24-H02PW	MK-415-100-135-6200-0B7	M83513 / 24-H03PW	MK-415-100-145-6200-0B7

M83513 / 25

M83513 / 25-A01CN	MK-223-009-225-0000-900	M83513 / 25-B01NN	MK-222-015-225-0000-900	M83513 / 25-C01PN	MK-225-021-225-0000-900
M83513 / 25-A01CP	MK-223-009-225-2200-900	M83513 / 25-B01NP	MK-222-015-225-2200-900	M83513 / 25-C01PP	MK-225-021-225-2200-900
M83513 / 25-A01CT	MK-223-009-225-0000-0B7	M83513 / 25-B01NT	MK-222-015-225-0000-0B7	M83513 / 25-C01PT	MK-225-021-225-0000-0B7
M83513 / 25-A01CW	MK-223-009-225-2200-0B7	M83513 / 25-B01NW	MK-222-015-225-2200-0B7	M83513 / 25-C01PW	MK-225-021-225-2200-0B7
M83513 / 25-A01NN	MK-222-009-225-0000-900	M83513 / 25-B01PN	MK-225-015-225-0000-900	M83513 / 25-C02CN	MK-223-021-235-0000-900
M83513 / 25-A01NP	MK-222-009-225-2200-900	M83513 / 25-B01PP	MK-225-015-225-2200-900	M83513 / 25-C02CP	MK-223-021-235-2200-900
M83513 / 25-A01NT	MK-222-009-225-0000-0B7	M83513 / 25-B01PT	MK-225-015-225-0000-0B7	M83513 / 25-C02CT	MK-223-021-235-0000-0B7
M83513 / 25-A01NW	MK-222-009-225-2200-0B7	M83513 / 25-B01PW	MK-225-015-225-2200-0B7	M83513 / 25-C02CW	MK-223-021-235-2200-0B7
M83513 / 25-A01PN	MK-225-009-225-0000-900	M83513 / 25-B02CN	MK-223-015-235-0000-900	M83513 / 25-C02NN	MK-222-021-235-0000-900
M83513 / 25-A01PP	MK-225-009-225-2200-900	M83513 / 25-B02CP	MK-223-015-235-2200-900	M83513 / 25-C02NP	MK-222-021-235-2200-900
M83513 / 25-A01PT	MK-225-009-225-0000-0B7	M83513 / 25-B02CT	MK-223-015-235-0000-0B7	M83513 / 25-C02NT	MK-222-021-235-0000-0B7
M83513 / 25-A01PW	MK-225-009-225-2200-0B7	M83513 / 25-B02CW	MK-223-015-235-2200-0B7	M83513 / 25-C02NW	MK-222-021-235-2200-0B7
M83513 / 25-A02CN	MK-223-009-235-0000-900	M83513 / 25-B02NN	MK-222-015-235-0000-900	M83513 / 25-C02PN	MK-225-021-235-0000-900
M83513 / 25-A02CP	MK-223-009-235-2200-900	M83513 / 25-B02NP	MK-222-015-235-2200-900	M83513 / 25-C02PP	MK-225-021-235-2200-900
M83513 / 25-A02CT	MK-223-009-235-0000-0B7	M83513 / 25-B02NT	MK-222-015-235-0000-0B7	M83513 / 25-C02PT	MK-225-021-235-0000-0B7
M83513 / 25-A02CW	MK-223-009-235-2200-0B7	M83513 / 25-B02NW	MK-222-015-235-2200-0B7	M83513 / 25-C02PW	MK-225-021-235-2200-0B7
M83513 / 25-A02NN	MK-222-009-235-0000-900	M83513 / 25-B02PN	MK-225-015-235-0000-900	M83513 / 25-C03CN	MK-223-021-245-0000-900
M83513 / 25-A02NP	MK-222-009-235-2200-900	M83513 / 25-B02PP	MK-225-015-235-2200-900	M83513 / 25-C03CP	MK-223-021-245-2200-900
M83513 / 25-A02NT	MK-222-009-235-0000-0B7	M83513 / 25-B02PT	MK-225-015-235-0000-0B7	M83513 / 25-C03CT	MK-223-021-245-0000-0B7
M83513 / 25-A02NW	MK-222-009-235-2200-0B7	M83513 / 25-B02PW	MK-225-015-235-2200-0B7	M83513 / 25-C03CW	MK-223-021-245-2200-0B7
M83513 / 25-A02PN	MK-225-009-235-0000-900	M83513 / 25-B03CN	MK-223-015-245-0000-900	M83513 / 25-C03NN	MK-222-021-245-0000-900
M83513 / 25-A02PP	MK-225-009-235-2200-900	M83513 / 25-B03CP	MK-223-015-245-2200-900	M83513 / 25-C03NP	MK-222-021-245-2200-900
M83513 / 25-A02PT	MK-225-009-235-0000-0B7	M83513 / 25-B03CT	MK-223-015-245-0000-0B7	M83513 / 25-C03NT	MK-222-021-245-0000-0B7
M83513 / 25-A02PW	MK-225-009-235-2200-0B7	M83513 / 25-B03CW	MK-223-015-245-2200-0B7	M83513 / 25-C03NW	MK-222-021-245-2200-0B7
M83513 / 25-A03CN	MK-223-009-245-0000-900	M83513 / 25-B03NN	MK-222-015-245-0000-900	M83513 / 25-C03PN	MK-225-021-245-0000-900
M83513 / 25-A03CP	MK-223-009-245-2200-900	M83513 / 25-B03NP	MK-222-015-245-2200-900	M83513 / 25-C03PP	MK-225-021-245-2200-900
M83513 / 25-A03CT	MK-223-009-245-0000-0B7	M83513 / 25-B03NT	MK-222-015-245-0000-0B7	M83513 / 25-C03PT	MK-225-021-245-0000-0B7
M83513 / 25-A03CW	MK-223-009-245-2200-0B7	M83513 / 25-B03NW	MK-222-015-245-2200-0B7	M83513 / 25-C03PW	MK-225-021-245-2200-0B7
M83513 / 25-A03NN	MK-222-009-245-0000-900	M83513 / 25-B03PN	MK-225-015-245-0000-900		
M83513 / 25-A03NP	MK-222-009-245-2200-900	M83513 / 25-B03PP	MK-225-015-245-2200-900	M83513 / 25-D01CN	MK-223-025-225-0000-900
M83513 / 25-A03NT	MK-222-009-245-0000-0B7	M83513 / 25-B03PT	MK-225-015-245-0000-0B7	M83513 / 25-D01CP	MK-223-025-225-2200-900
M83513 / 25-A03NW	MK-222-009-245-2200-0B7	M83513 / 25-B03PW	MK-225-015-245-2200-0B7	M83513 / 25-D01CT	MK-223-025-225-0000-0B7
M83513 / 25-A03PN	MK-225-009-245-0000-900			M83513 / 25-D01CW	MK-223-025-225-2200-0B7
M83513 / 25-A03PP	MK-225-009-245-2200-900	M83513 / 25-C01CN	MK-223-021-225-0000-900	M83513 / 25-D01NN	MK-222-025-225-0000-900
M83513 / 25-A03PT	MK-225-009-245-0000-0B7	M83513 / 25-C01CP	MK-223-021-225-2200-900	M83513 / 25-D01NP	MK-222-025-225-2200-900
M83513 / 25-A03PW	MK-225-009-245-2200-0B7	M83513 / 25-C01CT	MK-223-021-225-0000-0B7	M83513 / 25-D01NT	MK-222-025-225-0000-0B7
		M83513 / 25-C01CW	MK-223-021-225-2200-0B7	M83513 / 25-D01NW	MK-222-025-225-2200-0B7
M83513 / 25-B01CN	MK-223-015-225-0000-900	M83513 / 25-C01NN	MK-222-021-225-0000-900	M83513 / 25-D01PN	MK-225-025-225-0000-900
M83513 / 25-B01CP	MK-223-015-225-2200-900	M83513 / 25-C01NP	MK-222-021-225-2200-900	M83513 / 25-D01PP	MK-225-025-225-2200-900
M83513 / 25-B01CT	MK-223-015-225-0000-0B7	M83513 / 25-C01NT	MK-222-021-225-0000-0B7	M83513 / 25-D01PT	MK-225-025-225-0000-0B7
M83513 / 25-B01CW	MK-223-015-225-2200-0B7	M83513 / 25-C01NW	MK-222-021-225-2200-0B7	M83513 / 25-D01PW	MK-225-025-225-2200-0B7

Military Cross Reference Chart

-- Continued from previous page

M83513 / 25 (continued)

M83513 / 25-D02CN	MK-223-025-235-0000-900
M83513 / 25-D02CP	MK-223-025-235-2200-900
M83513 / 25-D02CT	MK-223-025-235-0000-0B7
M83513 / 25-D02CW	MK-223-025-235-2200-0B7
M83513 / 25-D02NN	MK-222-025-235-0000-900
M83513 / 25-D02NP	MK-222-025-235-2200-900
M83513 / 25-D02NT	MK-222-025-235-0000-0B7
M83513 / 25-D02NW	MK-222-025-235-2200-0B7
M83513 / 25-D02PN	MK-225-025-235-0000-900
M83513 / 25-D02PP	MK-225-025-235-2200-900
M83513 / 25-D02PT	MK-225-025-235-0000-0B7
M83513 / 25-D02PW	MK-225-025-235-2200-0B7
M83513 / 25-D03CN	MK-223-025-245-0000-900
M83513 / 25-D03CP	MK-223-025-245-2200-900
M83513 / 25-D03CT	MK-223-025-245-0000-0B7
M83513 / 25-D03CW	MK-223-025-245-2200-0B7
M83513 / 25-D03NN	MK-222-025-245-0000-900
M83513 / 25-D03NP	MK-222-025-245-2200-900
M83513 / 25-D03NT	MK-222-025-245-0000-0B7
M83513 / 25-D03NW	MK-222-025-245-2200-0B7
M83513 / 25-D03PN	MK-225-025-245-0000-900
M83513 / 25-D03PP	MK-225-025-245-2200-900
M83513 / 25-D03PT	MK-225-025-245-0000-0B7
M83513 / 25-D03PW	MK-225-025-245-2200-0B7
M83513 / 25-E01CN	MK-223-031-225-0000-900
M83513 / 25-E01CP	MK-223-031-225-2200-900
M83513 / 25-E01CT	MK-223-031-225-0000-0B7
M83513 / 25-E01CW	MK-223-031-225-2200-0B7
M83513 / 25-E01NN	MK-222-031-225-0000-900
M83513 / 25-E01NP	MK-222-031-225-2200-900
M83513 / 25-E01NT	MK-222-031-225-0000-0B7
M83513 / 25-E01NW	MK-222-031-225-2200-0B7
M83513 / 25-E01PN	MK-225-031-225-0000-900
M83513 / 25-E01PP	MK-225-031-225-2200-900
M83513 / 25-E01PT	MK-225-031-225-0000-0B7
M83513 / 25-E01PW	MK-225-031-225-2200-0B7
M83513 / 25-E02CN	MK-223-031-235-0000-900
M83513 / 25-E02CP	MK-223-031-235-2200-900
M83513 / 25-E02CT	MK-223-031-235-0000-0B7
M83513 / 25-E02CW	MK-223-031-235-2200-0B7
M83513 / 25-E02NN	MK-222-031-235-0000-900
M83513 / 25-E02NP	MK-222-031-235-2200-900
M83513 / 25-E02NT	MK-222-031-235-0000-0B7
M83513 / 25-E02NW	MK-222-031-235-2200-0B7
M83513 / 25-E02PN	MK-225-031-235-0000-900
M83513 / 25-E02PP	MK-225-031-235-2200-900
M83513 / 25-E02PT	MK-225-031-235-0000-0B7
M83513 / 25-E02PW	MK-225-031-235-2200-0B7
M83513 / 25-E03CN	MK-223-031-245-0000-900
M83513 / 25-E03CP	MK-223-031-245-2200-900
M83513 / 25-E03CT	MK-223-031-245-0000-0B7
M83513 / 25-E03CW	MK-223-031-245-2200-0B7
M83513 / 25-E03NN	MK-222-031-245-0000-900
M83513 / 25-E03NP	MK-222-031-245-2200-900
M83513 / 25-E03NT	MK-222-031-245-0000-0B7
M83513 / 25-E03NW	MK-222-031-245-2200-0B7
M83513 / 25-E03PN	MK-225-031-245-0000-900
M83513 / 25-E03PP	MK-225-031-245-2200-900
M83513 / 25-E03PT	MK-225-031-245-0000-0B7
M83513 / 25-E03PW	MK-225-031-245-2200-0B7
M83513 / 25-F01CN	MK-223-037-225-0000-900
M83513 / 25-F01CP	MK-223-037-225-2200-900
M83513 / 25-F01CT	MK-223-037-225-0000-0B7
M83513 / 25-F01CW	MK-223-037-225-2200-0B7
M83513 / 25-F01NN	MK-222-037-225-0000-900
M83513 / 25-F01NP	MK-222-037-225-2200-900
M83513 / 25-F01NT	MK-222-037-225-0000-0B7
M83513 / 25-F01NW	MK-222-037-225-2200-0B7
M83513 / 25-F01PN	MK-225-037-225-0000-900
M83513 / 25-F01PP	MK-225-037-225-2200-900
M83513 / 25-F01PT	MK-225-037-225-0000-0B7
M83513 / 25-F01PW	MK-225-037-225-2200-0B7
M83513 / 25-F02CN	MK-223-037-235-0000-900
M83513 / 25-F02CP	MK-223-037-235-2200-900
M83513 / 25-F02CT	MK-223-037-235-0000-0B7
M83513 / 25-F02CW	MK-223-037-235-2200-0B7
M83513 / 25-F02NN	MK-222-037-235-0000-900
M83513 / 25-F02NP	MK-222-037-235-2200-900
M83513 / 25-F02NT	MK-222-037-235-0000-0B7
M83513 / 25-F02NW	MK-222-037-235-2200-0B7
M83513 / 25-F02PN	MK-225-037-235-0000-900
M83513 / 25-F02PP	MK-225-037-235-2200-900
M83513 / 25-F02PT	MK-225-037-235-0000-0B7
M83513 / 25-F02PW	MK-225-037-235-2200-0B7
M83513 / 25-F03CN	MK-223-037-245-0000-900
M83513 / 25-F03CP	MK-223-037-245-2200-900
M83513 / 25-F03CT	MK-223-037-245-0000-0B7
M83513 / 25-F03CW	MK-223-037-245-2200-0B7
M83513 / 25-F03NN	MK-222-037-245-0000-900
M83513 / 25-F03NP	MK-222-037-245-2200-900
M83513 / 25-F03NT	MK-222-037-245-0000-0B7
M83513 / 25-F03NW	MK-222-037-245-2200-0B7
M83513 / 25-F03PN	MK-225-037-245-0000-900
M83513 / 25-F03PP	MK-225-037-245-2200-900
M83513 / 25-F03PT	MK-225-037-245-0000-0B7
M83513 / 25-F03PW	MK-225-037-245-2200-0B7

M83513 / 26

M83513 / 26-G01CN	MK-323-051-225-0000-900
M83513 / 26-G01CP	MK-323-051-225-2200-900
M83513 / 26-G01CT	MK-323-051-225-0000-0B7
M83513 / 26-G01CW	MK-323-051-225-2200-0B7
M83513 / 26-G01NN	MK-322-051-225-0000-900
M83513 / 26-G01NP	MK-322-051-225-2200-900
M83513 / 26-G01NT	MK-322-051-225-0000-0B7
M83513 / 26-G01NW	MK-322-051-225-2200-0B7
M83513 / 26-G01PN	MK-325-051-225-0000-900
M83513 / 26-G01PP	MK-325-051-225-2200-900
M83513 / 26-G01PT	MK-325-051-225-0000-0B7
M83513 / 26-G01PW	MK-325-051-225-2200-0B7
M83513 / 26-G02CN	MK-323-051-235-0000-900
M83513 / 26-G02CP	MK-323-051-235-2200-900
M83513 / 26-G02CT	MK-323-051-235-0000-0B7
M83513 / 26-G02CW	MK-323-051-235-2200-0B7
M83513 / 26-G02NN	MK-322-051-235-0000-900
M83513 / 26-G02NP	MK-322-051-235-2200-900
M83513 / 26-G02NT	MK-322-051-235-0000-0B7
M83513 / 26-G02NW	MK-322-051-235-2200-0B7
M83513 / 26-G02PN	MK-325-051-235-0000-900
M83513 / 26-G02PP	MK-325-051-235-2200-900
M83513 / 26-G02PT	MK-325-051-235-0000-0B7
M83513 / 26-G02PW	MK-325-051-235-2200-0B7
M83513 / 26-G03CN	MK-323-051-245-0000-900
M83513 / 26-G03CP	MK-323-051-245-2200-900
M83513 / 26-G03CT	MK-323-051-245-0000-0B7
M83513 / 26-G03CW	MK-323-051-245-2200-0B7
M83513 / 26-G03NN	MK-322-051-245-0000-900
M83513 / 26-G03NP	MK-322-051-245-2200-900
M83513 / 26-G03NT	MK-322-051-245-0000-0B7
M83513 / 26-G03NW	MK-322-051-245-2200-0B7
M83513 / 26-G03PN	MK-325-051-245-0000-900
M83513 / 26-G03PP	MK-325-051-245-2200-900
M83513 / 26-G03PT	MK-325-051-245-0000-0B7
M83513 / 26-G03PW	MK-325-051-245-2200-0B7

M83513 / 27

M83513 / 27-H01CN	MK-423-100-225-0000-900
M83513 / 27-H01CP	MK-423-100-225-6200-900
M83513 / 27-H01CT	MK-423-100-225-0000-0B7
M83513 / 27-H01CW	MK-423-100-225-6200-0B7
M83513 / 27-H01NN	MK-422-100-225-0000-900
M83513 / 27-H01NP	MK-422-100-225-6200-900
M83513 / 27-H01NT	MK-422-100-225-0000-0B7
M83513 / 27-H01NW	MK-422-100-225-6200-0B7
M83513 / 27-H01PN	MK-425-100-225-0000-900
M83513 / 27-H01PP	MK-425-100-225-6200-900
M83513 / 27-H01PT	MK-425-100-225-0000-0B7
M83513 / 27-H01PW	MK-425-100-225-6200-0B7
M83513 / 27-H02CN	MK-423-100-235-0000-900
M83513 / 27-H02CP	MK-423-100-235-6200-900
M83513 / 27-H02CT	MK-423-100-235-0000-0B7
M83513 / 27-H02CW	MK-423-100-235-6200-0B7
M83513 / 27-H02NN	MK-422-100-235-0000-900
M83513 / 27-H02NP	MK-422-100-235-6200-900

AirBorn

Military Cross Reference Chart

– Continued from previous page

M83513 / 27 (continued)

M83513 / 27-H02NT	MK-422-100-235-0000-0B7	M83513 / 27-H03CN	MK-423-100-245-0000-900	M83513 / 27-H03NT	MK-422-100-245-0000-0B7
M83513 / 27-H02NW	MK-422-100-235-6200-0B7	M83513 / 27-H03CP	MK-423-100-245-6200-900	M83513 / 27-H03NW	MK-422-100-245-6200-0B7
M83513 / 27-H02PN	MK-425-100-235-0000-900	M83513 / 27-H03CT	MK-423-100-245-0000-0B7	M83513 / 27-H03PN	MK-425-100-245-0000-900
M83513 / 27-H02PP	MK-425-100-235-6200-900	M83513 / 27-H03CW	MK-423-100-245-6200-0B7	M83513 / 27-H03PP	MK-425-100-245-6200-900
M83513 / 27-H02PT	MK-425-100-235-0000-0B7	M83513 / 27-H03NN	MK-422-100-245-0000-900	M83513 / 27-H03PT	MK-425-100-245-0000-0B7
M83513 / 27-H02PW	MK-425-100-235-6200-0B7	M83513 / 27-H03NP	MK-422-100-245-6200-900	M83513 / 27-H03PW	MK-425-100-245-6200-0B7

M83513 / 28

M83513 / 28-A01CN	MK-233-009-125-0000	M83513 / 28-B01PT	MK-235-015-125-0000-0B7	M83513 / 28-C02PN	MK-235-021-135-0000
M83513 / 28-A01CP	MK-233-009-125-2200	M83513 / 28-B01PW	MK-235-015-125-2200-0B7	M83513 / 28-C02PP	MK-235-021-135-2200
M83513 / 28-A01CT	MK-233-009-125-0000-0B7	M83513 / 28-B02CN	MK-233-015-135-0000	M83513 / 28-C02PT	MK-235-021-135-0000-0B7
M83513 / 28-A01CW	MK-233-009-125-2200-0B7	M83513 / 28-B02CP	MK-233-015-135-2200	M83513 / 28-C02PW	MK-235-021-135-2200-0B7
M83513 / 28-A01NN	MK-232-009-125-0000	M83513 / 28-B02CT	MK-233-015-135-0000-0B7	M83513 / 28-C03CN	MK-233-021-145-0000
M83513 / 28-A01NP	MK-232-009-125-2200	M83513 / 28-B02CW	MK-233-015-135-2200-0B7	M83513 / 28-C03CP	MK-233-021-145-2200
M83513 / 28-A01NT	MK-232-009-125-0000-0B7	M83513 / 28-B02NN	MK-232-015-135-0000	M83513 / 28-C03CT	MK-233-021-145-0000-0B7
M83513 / 28-A01NW	MK-232-009-125-2200-0B7	M83513 / 28-B02NP	MK-232-015-135-2200	M83513 / 28-C03CW	MK-233-021-145-2200-0B7
M83513 / 28-A01PN	MK-235-009-125-0000	M83513 / 28-B02NT	MK-232-015-135-0000-0B7	M83513 / 28-C03NN	MK-232-021-145-0000
M83513 / 28-A01PP	MK-235-009-125-2200	M83513 / 28-B02NW	MK-232-015-135-2200-0B7	M83513 / 28-C03NP	MK-232-021-145-2200
M83513 / 28-A01PT	MK-235-009-125-0000-0B7	M83513 / 28-B02PN	MK-235-015-135-0000	M83513 / 28-C03NT	MK-232-021-145-0000-0B7
M83513 / 28-A01PW	MK-235-009-125-2200-0B7	M83513 / 28-B02PP	MK-235-015-135-2200	M83513 / 28-C03NW	MK-232-021-145-2200-0B7
M83513 / 28-A02CN	MK-233-009-135-0000	M83513 / 28-B02PT	MK-235-015-135-0000-0B7	M83513 / 28-C03PN	MK-235-021-145-0000
M83513 / 28-A02CP	MK-233-009-135-2200	M83513 / 28-B02PW	MK-235-015-135-2200-0B7	M83513 / 28-C03PP	MK-235-021-145-2200
M83513 / 28-A02CT	MK-233-009-135-0000-0B7	M83513 / 28-B03CN	MK-233-015-145-0000	M83513 / 28-C03PT	MK-235-021-145-0000-0B7
M83513 / 28-A02CW	MK-233-009-135-2200-0B7	M83513 / 28-B03CP	MK-233-015-145-2200	M83513 / 28-C03PW	MK-235-021-145-2200-0B7
M83513 / 28-A02NN	MK-232-009-135-0000	M83513 / 28-B03CT	MK-233-015-145-0000-0B7		
M83513 / 28-A02NP	MK-232-009-135-2200	M83513 / 28-B03CW	MK-233-015-145-2200-0B7	M83513 / 28-D01CN	MK-233-025-125-0000
M83513 / 28-A02NT	MK-232-009-135-0000-0B7	M83513 / 28-B03NN	MK-232-015-145-0000	M83513 / 28-D01CP	MK-233-025-125-2200
M83513 / 28-A02NW	MK-232-009-135-2200-0B7	M83513 / 28-B03NP	MK-232-015-145-2200	M83513 / 28-D01CT	MK-233-025-125-0000-0B7
M83513 / 28-A02PN	MK-235-009-135-0000	M83513 / 28-B03NT	MK-232-015-145-0000-0B7	M83513 / 28-D01CW	MK-233-025-125-2200-0B7
M83513 / 28-A02PP	MK-235-009-135-2200	M83513 / 28-B03NW	MK-232-015-145-2200-0B7	M83513 / 28-D01NN	MK-232-025-125-0000
M83513 / 28-A02PT	MK-235-009-135-0000-0B7	M83513 / 28-B03PN	MK-235-015-145-0000	M83513 / 28-D01NP	MK-232-025-125-2200
M83513 / 28-A02PW	MK-235-009-135-2200-0B7	M83513 / 28-B03PP	MK-235-015-145-2200	M83513 / 28-D01NT	MK-232-025-125-0000-0B7
M83513 / 28-A03CN	MK-233-009-145-0000	M83513 / 28-B03PT	MK-235-015-145-0000-0B7	M83513 / 28-D01NW	MK-232-025-125-2200-0B7
M83513 / 28-A03CP	MK-233-009-145-2200	M83513 / 28-B03PW	MK-235-015-145-2200-0B7	M83513 / 28-D01PN	MK-235-025-125-0000
M83513 / 28-A03CT	MK-233-009-145-0000-0B7			M83513 / 28-D01PP	MK-235-025-125-2200
M83513 / 28-A03CW	MK-233-009-145-2200-0B7	M83513 / 28-C01CN	MK-233-021-125-0000	M83513 / 28-D01PT	MK-235-025-125-0000-0B7
M83513 / 28-A03NN	MK-232-009-145-0000	M83513 / 28-C01CP	MK-233-021-125-2200	M83513 / 28-D01PW	MK-235-025-125-2200-0B7
M83513 / 28-A03NP	MK-232-009-145-2200	M83513 / 28-C01CT	MK-233-021-125-0000-0B7	M83513 / 28-D02CN	MK-233-025-135-0000
M83513 / 28-A03NT	MK-232-009-145-0000-0B7	M83513 / 28-C01CW	MK-233-021-125-2200-0B7	M83513 / 28-D02CP	MK-233-025-135-2200
M83513 / 28-A03NW	MK-232-009-145-2200-0B7	M83513 / 28-C01NN	MK-232-021-125-0000	M83513 / 28-D02CT	MK-233-025-135-0000-0B7
M83513 / 28-A03PN	MK-235-009-145-0000	M83513 / 28-C01NP	MK-232-021-125-2200	M83513 / 28-D02CW	MK-233-025-135-2200-0B7
M83513 / 28-A03PP	MK-235-009-145-2200	M83513 / 28-C01NT	MK-232-021-125-0000-0B7	M83513 / 28-D02NN	MK-232-025-135-0000
M83513 / 28-A03PT	MK-235-009-145-0000-0B7	M83513 / 28-C01NW	MK-232-021-125-2200-0B7	M83513 / 28-D02NP	MK-232-025-135-2200
M83513 / 28-A03PW	MK-235-009-145-2200-0B7	M83513 / 28-C01PN	MK-235-021-125-0000	M83513 / 28-D02NT	MK-232-025-135-0000-0B7
		M83513 / 28-C01PP	MK-235-021-125-2200	M83513 / 28-D02NW	MK-232-025-135-2200-0B7
M83513 / 28-B01CN	MK-233-015-125-0000	M83513 / 28-C01PT	MK-235-021-125-0000-0B7	M83513 / 28-D02PN	MK-235-025-135-0000
M83513 / 28-B01CP	MK-233-015-125-2200	M83513 / 28-C01PW	MK-235-021-125-2200-0B7	M83513 / 28-D02PP	MK-235-025-135-2200
M83513 / 28-B01CT	MK-233-015-125-0000-0B7	M83513 / 28-C02CN	MK-233-021-135-0000	M83513 / 28-D02PT	MK-235-025-135-0000-0B7
M83513 / 28-B01CW	MK-233-015-125-2200-0B7	M83513 / 28-C02CP	MK-233-021-135-2200	M83513 / 28-D02PW	MK-235-025-135-2200-0B7
M83513 / 28-B01NN	MK-232-015-125-0000	M83513 / 28-C02CT	MK-233-021-135-0000-0B7	M83513 / 28-D03CN	MK-233-025-145-0000
M83513 / 28-B01NP	MK-232-015-125-2200	M83513 / 28-C02CW	MK-233-021-135-2200-0B7	M83513 / 28-D03CP	MK-233-025-145-2200
M83513 / 28-B01NT	MK-232-015-125-0000-0B7	M83513 / 28-C02NN	MK-232-021-135-0000	M83513 / 28-D03CT	MK-233-025-145-0000-0B7
M83513 / 28-B01NW	MK-232-015-125-2200-0B7	M83513 / 28-C02NP	MK-232-021-135-2200	M83513 / 28-D03CW	MK-233-025-145-2200-0B7
M83513 / 28-B01PN	MK-235-015-125-0000	M83513 / 28-C02NT	MK-232-021-135-0000-0B7	M83513 / 28-D03NN	MK-232-025-145-0000
M83513 / 28-B01PP	MK-235-015-125-2200	M83513 / 28-C02NW	MK-232-021-135-2200-0B7	M83513 / 28-D03NP	MK-232-025-145-2200

Military Cross Reference Chart

-- Continued from previous page

M83513 / 28 (continued)

M83513 / 28-D03NT	MK-232-025-145-0000-0B7
M83513 / 28-D03NW	MK-232-025-145-2200-0B7
M83513 / 28-D03PN	MK-235-025-145-0000
M83513 / 28-D03PP	MK-235-025-145-2200
M83513 / 28-D03PT	MK-235-025-145-0000-0B7
M83513 / 28-D03PW	MK-235-025-145-2200-0B7
M83513 / 28-E01CN	MK-233-031-125-0000
M83513 / 28-E01CP	MK-233-031-125-2200
M83513 / 28-E01CT	MK-233-031-125-0000-0B7
M83513 / 28-E01CW	MK-233-031-125-2200-0B7
M83513 / 28-E01NN	MK-232-031-125-0000
M83513 / 28-E01NP	MK-232-031-125-2200
M83513 / 28-E01NT	MK-232-031-125-0000-0B7
M83513 / 28-E01NW	MK-232-031-125-2200-0B7
M83513 / 28-E01PN	MK-235-031-125-0000
M83513 / 28-E01PP	MK-235-031-125-2200
M83513 / 28-E01PT	MK-235-031-125-0000-0B7
M83513 / 28-E01PW	MK-235-031-125-2200-0B7
M83513 / 28-E02CN	MK-233-031-135-0000
M83513 / 28-E02CP	MK-233-031-135-2200
M83513 / 28-E02CT	MK-233-031-135-0000-0B7
M83513 / 28-E02CW	MK-233-031-135-2200-0B7
M83513 / 28-E02NN	MK-232-031-135-0000
M83513 / 28-E02NP	MK-232-031-135-2200
M83513 / 28-E02NT	MK-232-031-135-0000-0B7
M83513 / 28-E02NW	MK-232-031-135-2200-0B7
M83513 / 28-E02PN	MK-235-031-135-0000
M83513 / 28-E02PP	MK-235-031-135-2200
M83513 / 28-E02PT	MK-235-031-135-0000-0B7
M83513 / 28-E02PW	MK-235-031-135-2200-0B7
M83513 / 28-E03CN	MK-233-031-145-0000
M83513 / 28-E03CP	MK-233-031-145-2200
M83513 / 28-E03CT	MK-233-031-145-0000-0B7
M83513 / 28-E03CW	MK-233-031-145-2200-0B7
M83513 / 28-E03NN	MK-232-031-145-0000
M83513 / 28-E03NP	MK-232-031-145-2200
M83513 / 28-E03NT	MK-232-031-145-0000-0B7
M83513 / 28-E03NW	MK-232-031-145-2200-0B7
M83513 / 28-E03PN	MK-235-031-145-0000
M83513 / 28-E03PP	MK-235-031-145-2200
M83513 / 28-E03PT	MK-235-031-145-0000-0B7
M83513 / 28-E03PW	MK-235-031-145-2200-0B7
M83513 / 28-F01CN	MK-233-037-125-0000
M83513 / 28-F01CP	MK-233-037-125-2200
M83513 / 28-F01CT	MK-233-037-125-0000-0B7
M83513 / 28-F01CW	MK-233-037-125-2200-0B7
M83513 / 28-F01NN	MK-232-037-125-0000
M83513 / 28-F01NP	MK-232-037-125-2200
M83513 / 28-F01NT	MK-232-037-125-0000-0B7
M83513 / 28-F01NW	MK-232-037-125-2200-0B7
M83513 / 28-F01PN	MK-235-037-125-0000
M83513 / 28-F01PP	MK-235-037-125-2200
M83513 / 28-F01PT	MK-235-037-125-0000-0B7
M83513 / 28-F01PW	MK-235-037-125-2200-0B7
M83513 / 28-F02CN	MK-233-037-135-0000
M83513 / 28-F02CP	MK-233-037-135-2200
M83513 / 28-F02CT	MK-233-037-135-0000-0B7
M83513 / 28-F02CW	MK-233-037-135-2200-0B7
M83513 / 28-F02NN	MK-232-037-135-0000
M83513 / 28-F02NP	MK-232-037-135-2200
M83513 / 28-F02NT	MK-232-037-135-0000-0B7
M83513 / 28-F02NW	MK-232-037-135-2200-0B7
M83513 / 28-F02PN	MK-235-037-135-0000
M83513 / 28-F02PP	MK-235-037-135-2200
M83513 / 28-F02PT	MK-235-037-135-0000-0B7
M83513 / 28-F02PW	MK-235-037-135-2200-0B7
M83513 / 28-F03CN	MK-233-037-145-0000
M83513 / 28-F03CP	MK-233-037-145-2200
M83513 / 28-F03CT	MK-233-037-145-0000-0B7
M83513 / 28-F03CW	MK-233-037-145-2200-0B7
M83513 / 28-F03NN	MK-232-037-145-0000
M83513 / 28-F03NP	MK-232-037-145-2200
M83513 / 28-F03NT	MK-232-037-145-0000-0B7
M83513 / 28-F03NW	MK-232-037-145-2200-0B7
M83513 / 28-F03PN	MK-235-037-145-0000
M83513 / 28-F03PP	MK-235-037-145-2200
M83513 / 28-F03PT	MK-235-037-145-0000-0B7
M83513 / 28-F03PW	MK-235-037-145-2200-0B7

M83513 / 29

M83513 / 29-G01CN	MK-333-051-125-0000
M83513 / 29-G01CP	MK-333-051-125-2200
M83513 / 29-G01CT	MK-333-051-125-0000-0B7
M83513 / 29-G01CW	MK-333-051-125-2200-0B7
M83513 / 29-G01NN	MK-332-051-125-0000
M83513 / 29-G01NP	MK-332-051-125-2200
M83513 / 29-G01NT	MK-332-051-125-0000-0B7
M83513 / 29-G01NW	MK-332-051-125-2200-0B7
M83513 / 29-G01PN	MK-335-051-125-0000
M83513 / 29-G01PP	MK-335-051-125-2200
M83513 / 29-G01PT	MK-335-051-125-0000-0B7
M83513 / 29-G01PW	MK-335-051-125-2200-0B7
M83513 / 29-G02CN	MK-333-051-135-0000
M83513 / 29-G02CP	MK-333-051-135-2200
M83513 / 29-G02CT	MK-333-051-135-0000-0B7
M83513 / 29-G02CW	MK-333-051-135-2200-0B7
M83513 / 29-G02NN	MK-332-051-135-0000
M83513 / 29-G02NP	MK-332-051-135-2200
M83513 / 29-G02NT	MK-332-051-135-0000-0B7
M83513 / 29-G02NW	MK-332-051-135-2200-0B7
M83513 / 29-G02PN	MK-335-051-135-0000
M83513 / 29-G02PP	MK-335-051-135-2200
M83513 / 29-G02PT	MK-335-051-135-0000-0B7
M83513 / 29-G02PW	MK-335-051-135-2200-0B7
M83513 / 29-G03CN	MK-333-051-145-0000
M83513 / 29-G03CP	MK-333-051-145-2200
M83513 / 29-G03CT	MK-333-051-145-0000-0B7
M83513 / 29-G03CW	MK-333-051-145-2200-0B7
M83513 / 29-G03NN	MK-332-051-145-0000
M83513 / 29-G03NP	MK-332-051-145-2200
M83513 / 29-G03NT	MK-332-051-145-0000-0B7
M83513 / 29-G03NW	MK-332-051-145-2200-0B7
M83513 / 29-G03PN	MK-335-051-145-0000
M83513 / 29-G03PP	MK-335-051-145-2200
M83513 / 29-G03PT	MK-335-051-145-0000-0B7
M83513 / 29-G03PW	MK-335-051-145-2200-0B7

M83513 / 30

M83513 / 30-H01CN	MK-433-100-125-0000
M83513 / 30-H01CP	MK-433-100-125-6200
M83513 / 30-H01CT	MK-433-100-125-0000-0B7
M83513 / 30-H01CW	MK-433-100-125-6200-0B7
M83513 / 30-H01NN	MK-432-100-125-0000
M83513 / 30-H01NP	MK-432-100-125-6200
M83513 / 30-H01NT	MK-432-100-125-0000-0B7
M83513 / 30-H01NW	MK-432-100-125-6200-0B7
M83513 / 30-H01PN	MK-435-100-125-0000
M83513 / 30-H01PP	MK-435-100-125-6200
M83513 / 30-H01PT	MK-435-100-125-0000-0B7
M83513 / 30-H01PW	MK-435-100-125-6200-0B7
M83513 / 30-H02CN	MK-433-100-135-0000
M83513 / 30-H02CP	MK-433-100-135-6200
M83513 / 30-H02CT	MK-433-100-135-0000-0B7
M83513 / 30-H02CW	MK-433-100-135-6200-0B7
M83513 / 30-H02NN	MK-432-100-135-0000
M83513 / 30-H02NP	MK-432-100-135-6200
M83513 / 30-H02NT	MK-432-100-135-0000-0B7
M83513 / 30-H02NW	MK-432-100-135-6200-0B7
M83513 / 30-H02PN	MK-435-100-135-0000
M83513 / 30-H02PP	MK-435-100-135-6200
M83513 / 30-H02PT	MK-435-100-135-0000-0B7
M83513 / 30-H02PW	MK-435-100-135-6200-0B7
M83513 / 30-H03CN	MK-433-100-145-0000
M83513 / 30-H03CP	MK-433-100-145-6200
M83513 / 30-H03CT	MK-433-100-145-0000-0B7
M83513 / 30-H03CW	MK-433-100-145-6200-0B7
M83513 / 30-H03NN	MK-432-100-145-0000
M83513 / 30-H03NP	MK-432-100-145-6200
M83513 / 30-H03NT	MK-432-100-145-0000-0B7
M83513 / 30-H03NW	MK-432-100-145-6200-0B7
M83513 / 30-H03PN	MK-435-100-145-0000
M83513 / 30-H03PP	MK-435-100-145-6200
M83513 / 30-H03PT	MK-435-100-145-0000-0B7
M83513 / 30-H03PW	MK-435-100-145-6200-0B7

AirBorn

Military Cross Reference Chart

-- Continued from previous page

M83513 / 31

M83513 / 31-A01CN	MK-243-009-225-0000-900
M83513 / 31-A01CP	MK-243-009-225-2200-900
M83513 / 31-A01CT	MK-243-009-225-0000-0B7
M83513 / 31-A01CW	MK-243-009-225-2200-0B7
M83513 / 31-A01NN	MK-242-009-225-0000-900
M83513 / 31-A01NP	MK-242-009-225-2200-900
M83513 / 31-A01NT	MK-242-009-225-0000-0B7
M83513 / 31-A01NW	MK-242-009-225-2200-0B7
M83513 / 31-A01PN	MK-245-009-225-0000-900
M83513 / 31-A01PP	MK-245-009-225-2200-900
M83513 / 31-A01PT	MK-245-009-225-0000-0B7
M83513 / 31-A01PW	MK-245-009-225-2200-0B7
M83513 / 31-A02CN	MK-243-009-235-0000-900
M83513 / 31-A02CP	MK-243-009-235-2200-900
M83513 / 31-A02CT	MK-243-009-235-0000-0B7
M83513 / 31-A02CW	MK-243-009-235-2200-0B7
M83513 / 31-A02NN	MK-242-009-235-0000-900
M83513 / 31-A02NP	MK-242-009-235-2200-900
M83513 / 31-A02NT	MK-242-009-235-0000-0B7
M83513 / 31-A02NW	MK-242-009-235-2200-0B7
M83513 / 31-A02PN	MK-245-009-235-0000-900
M83513 / 31-A02PP	MK-245-009-235-2200-900
M83513 / 31-A02PT	MK-245-009-235-0000-0B7
M83513 / 31-A02PW	MK-245-009-235-2200-0B7
M83513 / 31-A03CN	MK-243-009-245-0000-900
M83513 / 31-A03CP	MK-243-009-245-2200-900
M83513 / 31-A03CT	MK-243-009-245-0000-0B7
M83513 / 31-A03CW	MK-243-009-245-2200-0B7
M83513 / 31-A03NN	MK-242-009-245-0000-900
M83513 / 31-A03NP	MK-242-009-245-2200-900
M83513 / 31-A03NT	MK-242-009-245-0000-0B7
M83513 / 31-A03NW	MK-242-009-245-2200-0B7
M83513 / 31-A03PN	MK-245-009-245-0000-900
M83513 / 31-A03PP	MK-245-009-245-2200-900
M83513 / 31-A03PT	MK-245-009-245-0000-0B7
M83513 / 31-A03PW	MK-245-009-245-2200-0B7
M83513 / 31-B01CN	MK-243-015-225-0000-900
M83513 / 31-B01CP	MK-243-015-225-2200-900
M83513 / 31-B01CT	MK-243-015-225-0000-0B7
M83513 / 31-B01CW	MK-243-015-225-2200-0B7
M83513 / 31-B01NN	MK-242-015-225-0000-900
M83513 / 31-B01NP	MK-242-015-225-2200-900
M83513 / 31-B01NT	MK-242-015-225-0000-0B7
M83513 / 31-B01NW	MK-242-015-225-2200-0B7
M83513 / 31-B01PN	MK-245-015-225-0000-900
M83513 / 31-B01PP	MK-245-015-225-2200-900
M83513 / 31-B01PT	MK-245-015-225-0000-0B7
M83513 / 31-B01PW	MK-245-015-225-2200-0B7
M83513 / 31-B02CN	MK-243-015-235-0000-900
M83513 / 31-B02CP	MK-243-015-235-2200-900
M83513 / 31-B02CT	MK-243-015-235-0000-0B7
M83513 / 31-B02CW	MK-243-015-235-2200-0B7
M83513 / 31-B02NN	MK-242-015-235-0000-900
M83513 / 31-B02NP	MK-242-015-235-2200-900
M83513 / 31-B02NT	MK-242-015-235-0000-0B7
M83513 / 31-B02NW	MK-242-015-235-2200-0B7
M83513 / 31-B02PN	MK-245-015-235-0000-900
M83513 / 31-B02PP	MK-245-015-235-2200-900
M83513 / 31-B02PT	MK-245-015-235-0000-0B7
M83513 / 31-B02PW	MK-245-015-235-2200-0B7
M83513 / 31-B03CN	MK-243-015-245-0000-900
M83513 / 31-B03CP	MK-243-015-245-2200-900
M83513 / 31-B03CT	MK-243-015-245-0000-0B7
M83513 / 31-B03CW	MK-243-015-245-2200-0B7
M83513 / 31-B03NN	MK-242-015-245-0000-900
M83513 / 31-B03NP	MK-242-015-245-2200-900
M83513 / 31-B03NT	MK-242-015-245-0000-0B7
M83513 / 31-B03NW	MK-242-015-245-2200-0B7
M83513 / 31-B03PN	MK-245-015-245-0000-900
M83513 / 31-B03PP	MK-245-015-245-2200-900
M83513 / 31-B03PT	MK-245-015-245-0000-0B7
M83513 / 31-B03PW	MK-245-015-245-2200-0B7
M83513 / 31-C01CN	MK-243-021-225-0000-900
M83513 / 31-C01CP	MK-243-021-225-2200-900
M83513 / 31-C01CT	MK-243-021-225-0000-0B7
M83513 / 31-C01CW	MK-243-021-225-2200-0B7
M83513 / 31-C01NN	MK-242-021-225-0000-900
M83513 / 31-C01NP	MK-242-021-225-2200-900
M83513 / 31-C01NT	MK-242-021-225-0000-0B7
M83513 / 31-C01NW	MK-242-021-225-2200-0B7
M83513 / 31-C01PN	MK-245-021-225-0000-900
M83513 / 31-C01PP	MK-245-021-225-2200-900
M83513 / 31-C01PT	MK-245-021-225-0000-0B7
M83513 / 31-C01PW	MK-245-021-225-2200-0B7
M83513 / 31-C02CN	MK-243-021-235-0000-900
M83513 / 31-C02CP	MK-243-021-235-2200-900
M83513 / 31-C02CT	MK-243-021-235-0000-0B7
M83513 / 31-C02CW	MK-243-021-235-2200-0B7
M83513 / 31-C02NN	MK-242-021-235-0000-900
M83513 / 31-C02NP	MK-242-021-235-2200-900
M83513 / 31-C02NT	MK-242-021-235-0000-0B7
M83513 / 31-C02NW	MK-242-021-235-2200-0B7
M83513 / 31-C02PN	MK-245-021-235-0000-900
M83513 / 31-C02PP	MK-245-021-235-2200-900
M83513 / 31-C02PT	MK-245-021-235-0000-0B7
M83513 / 31-C02PW	MK-245-021-235-2200-0B7
M83513 / 31-C03CN	MK-243-021-245-0000-900
M83513 / 31-C03CP	MK-243-021-245-2200-900
M83513 / 31-C03CT	MK-243-021-245-0000-0B7
M83513 / 31-C03CW	MK-243-021-245-2200-0B7
M83513 / 31-C03NN	MK-242-021-245-0000-900
M83513 / 31-C03NP	MK-242-021-245-2200-900
M83513 / 31-C03NT	MK-242-021-245-0000-0B7
M83513 / 31-C03NW	MK-242-021-245-2200-0B7
M83513 / 31-C03PN	MK-245-021-245-0000-900
M83513 / 31-C03PP	MK-245-021-245-2200-900
M83513 / 31-C03PT	MK-245-021-245-0000-0B7
M83513 / 31-C03PW	MK-245-021-245-2200-0B7
M83513 / 31-D01CN	MK-243-025-225-0000-900
M83513 / 31-D01CP	MK-243-025-225-2200-900
M83513 / 31-D01CT	MK-243-025-225-0000-0B7
M83513 / 31-D01CW	MK-243-025-225-2200-0B7
M83513 / 31-D01NN	MK-242-025-225-0000-900
M83513 / 31-D01NP	MK-242-025-225-2200-900
M83513 / 31-D01NT	MK-242-025-225-0000-0B7
M83513 / 31-D01NW	MK-242-025-225-2200-0B7
M83513 / 31-D01PN	MK-245-025-225-0000-900
M83513 / 31-D01PP	MK-245-025-225-2200-900
M83513 / 31-D01PT	MK-245-025-225-0000-0B7
M83513 / 31-D01PW	MK-245-025-225-2200-0B7
M83513 / 31-D02CN	MK-243-025-235-0000-900
M83513 / 31-D02CP	MK-243-025-235-2200-900
M83513 / 31-D02CT	MK-243-025-235-0000-0B7
M83513 / 31-D02CW	MK-243-025-235-2200-0B7
M83513 / 31-D02NN	MK-242-025-235-0000-900
M83513 / 31-D02NP	MK-242-025-235-2200-900
M83513 / 31-D02NT	MK-242-025-235-0000-0B7
M83513 / 31-D02NW	MK-242-025-235-2200-0B7
M83513 / 31-D02PN	MK-245-025-235-0000-900
M83513 / 31-D02PP	MK-245-025-235-2200-900
M83513 / 31-D02PT	MK-245-025-235-0000-0B7
M83513 / 31-D02PW	MK-245-025-235-2200-0B7
M83513 / 31-D03CN	MK-243-025-245-0000-900
M83513 / 31-D03CP	MK-243-025-245-2200-900
M83513 / 31-D03CT	MK-243-025-245-0000-0B7
M83513 / 31-D03CW	MK-243-025-245-2200-0B7
M83513 / 31-D03NN	MK-242-025-245-0000-900
M83513 / 31-D03NP	MK-242-025-245-2200-900
M83513 / 31-D03NT	MK-242-025-245-0000-0B7
M83513 / 31-D03NW	MK-242-025-245-2200-0B7
M83513 / 31-D03PN	MK-245-025-245-0000-900
M83513 / 31-D03PP	MK-245-025-245-2200-900
M83513 / 31-D03PT	MK-245-025-245-0000-0B7
M83513 / 31-D03PW	MK-245-025-245-2200-0B7
M83513 / 31-E01CN	MK-243-031-225-0000-900
M83513 / 31-E01CP	MK-243-031-225-2200-900
M83513 / 31-E01CT	MK-243-031-225-0000-0B7
M83513 / 31-E01CW	MK-243-031-225-2200-0B7
M83513 / 31-E01NN	MK-242-031-225-0000-900
M83513 / 31-E01NP	MK-242-031-225-2200-900
M83513 / 31-E01NT	MK-242-031-225-0000-0B7
M83513 / 31-E01NW	MK-242-031-225-2200-0B7
M83513 / 31-E01PN	MK-245-031-225-0000-900
M83513 / 31-E01PP	MK-245-031-225-2200-900
M83513 / 31-E01PT	MK-245-031-225-0000-0B7
M83513 / 31-E01PW	MK-245-031-225-2200-0B7
M83513 / 31-E02CN	MK-243-031-235-0000-900
M83513 / 31-E02CP	MK-243-031-235-2200-900
M83513 / 31-E02CT	MK-243-031-235-0000-0B7
M83513 / 31-E02CW	MK-243-031-235-2200-0B7
M83513 / 31-E02NN	MK-242-031-235-0000-900
M83513 / 31-E02NP	MK-242-031-235-2200-900

Military Cross Reference Chart

-- Continued from previous page

M83513 / 31 (continued)

M83513 / 31-E02NT	MK-242-031-235-0000-0B7	M83513 / 31-F01CN	MK-243-037-225-0000-900	M83513 / 31-F02NT	MK-242-037-235-0000-0B7
M83513 / 31-E02NW	MK-242-031-235-2200-0B7	M83513 / 31-F01CP	MK-243-037-225-2200-900	M83513 / 31-F02NW	MK-242-037-235-2200-0B7
M83513 / 31-E02PN	MK-245-031-235-0000-900	M83513 / 31-F01CT	MK-243-037-225-0000-0B7	M83513 / 31-F02PN	MK-245-037-235-0000-900
M83513 / 31-E02PP	MK-245-031-235-2200-900	M83513 / 31-F01CW	MK-243-037-225-2200-0B7	M83513 / 31-F02PP	MK-245-037-235-2200-900
M83513 / 31-E02PT	MK-245-031-235-0000-0B7	M83513 / 31-F01NN	MK-242-037-225-0000-900	M83513 / 31-F02PT	MK-245-037-235-0000-0B7
M83513 / 31-E02PW	MK-245-031-235-2200-0B7	M83513 / 31-F01NP	MK-242-037-225-2200-900	M83513 / 31-F02PW	MK-245-037-235-2200-0B7
M83513 / 31-E03CN	MK-243-031-245-0000-900	M83513 / 31-F01NT	MK-242-037-225-0000-0B7	M83513 / 31-F03CN	MK-243-037-245-0000-900
M83513 / 31-E03CP	MK-243-031-245-2200-900	M83513 / 31-F01NW	MK-242-037-225-2200-0B7	M83513 / 31-F03CP	MK-243-037-245-2200-900
M83513 / 31-E03CT	MK-243-031-245-0000-0B7	M83513 / 31-F01PN	MK-245-037-225-0000-900	M83513 / 31-F03CT	MK-243-037-245-0000-0B7
M83513 / 31-E03CW	MK-243-031-245-2200-0B7	M83513 / 31-F01PP	MK-245-037-225-2200-900	M83513 / 31-F03CW	MK-243-037-245-2200-0B7
M83513 / 31-E03NN	MK-242-031-245-0000-900	M83513 / 31-F01PT	MK-245-037-225-0000-0B7	M83513 / 31-F03NN	MK-242-037-245-0000-900
M83513 / 31-E03NP	MK-242-031-245-2200-900	M83513 / 31-F01PW	MK-245-037-225-2200-0B7	M83513 / 31-F03NP	MK-242-037-245-2200-900
M83513 / 31-E03NT	MK-242-031-245-0000-0B7	M83513 / 31-F02CN	MK-243-037-235-0000-900	M83513 / 31-F03NT	MK-242-037-245-0000-0B7
M83513 / 31-E03NW	MK-242-031-245-2200-0B7	M83513 / 31-F02CP	MK-243-037-235-2200-900	M83513 / 31-F03NW	MK-242-037-245-2200-0B7
M83513 / 31-E03PN	MK-245-031-245-0000-900	M83513 / 31-F02CT	MK-243-037-235-0000-0B7	M83513 / 31-F03PN	MK-245-037-245-0000-900
M83513 / 31-E03PP	MK-245-031-245-2200-900	M83513 / 31-F02CW	MK-243-037-235-2200-0B7	M83513 / 31-F03PP	MK-245-037-245-2200-900
M83513 / 31-E03PT	MK-245-031-245-0000-0B7	M83513 / 31-F02NN	MK-242-037-235-0000-900	M83513 / 31-F03PT	MK-245-037-245-0000-0B7
M83513 / 31-E03PW	MK-245-031-245-2200-0B7	M83513 / 31-F02NP	MK-242-037-235-2200-900	M83513 / 31-F03PW	MK-245-037-245-2200-0B7

M83513 / 32

M83513 / 32-G01CN	MK-343-051-225-0000-900	M83513 / 32-G02CN	MK-343-051-235-0000-900	M83513 / 32-G03CN	MK-343-051-245-0000-900
M83513 / 32-G01CP	MK-343-051-225-2200-900	M83513 / 32-G02CP	MK-343-051-235-2200-900	M83513 / 32-G03CP	MK-343-051-245-2200-900
M83513 / 32-G01CT	MK-343-051-225-0000-0B7	M83513 / 32-G02CT	MK-343-051-235-0000-0B7	M83513 / 32-G03CT	MK-343-051-245-0000-0B7
M83513 / 32-G01CW	MK-343-051-225-2200-0B7	M83513 / 32-G02CW	MK-343-051-235-2200-0B7	M83513 / 32-G03CW	MK-343-051-245-2200-0B7
M83513 / 32-G01NN	MK-342-051-225-0000-900	M83513 / 32-G02NN	MK-342-051-235-0000-900	M83513 / 32-G03NN	MK-342-051-245-0000-900
M83513 / 32-G01NP	MK-342-051-225-2200-900	M83513 / 32-G02NP	MK-342-051-235-2200-900	M83513 / 32-G03NP	MK-342-051-245-2200-900
M83513 / 32-G01NT	MK-342-051-225-0000-0B7	M83513 / 32-G02NT	MK-342-051-235-0000-0B7	M83513 / 32-G03NT	MK-342-051-245-0000-0B7
M83513 / 32-G01NW	MK-342-051-225-2200-0B7	M83513 / 32-G02NW	MK-342-051-235-2200-0B7	M83513 / 32-G03NW	MK-342-051-245-2200-0B7
M83513 / 32-G01PN	MK-345-051-225-0000-900	M83513 / 32-G02PN	MK-345-051-235-0000-900	M83513 / 32-G03PN	MK-345-051-245-0000-900
M83513 / 32-G01PP	MK-345-051-225-2200-900	M83513 / 32-G02PP	MK-345-051-235-2200-900	M83513 / 32-G03PP	MK-345-051-245-2200-900
M83513 / 32-G01PT	MK-345-051-225-0000-0B7	M83513 / 32-G02PT	MK-345-051-235-0000-0B7	M83513 / 32-G03PT	MK-345-051-245-0000-0B7
M83513 / 32-G01PW	MK-345-051-225-2200-0B7	M83513 / 32-G02PW	MK-345-051-235-2200-0B7	M83513 / 32-G03PW	MK-345-051-245-2200-0B7

M83513 / 33

M83513 / 33-H01CN	MK-443-100-225-0000-900	M83513 / 33-H02CN	MK-443-100-235-0000-900	M83513 / 33-H03CN	MK-443-100-245-0000-900
M83513 / 33-H01CP	MK-443-100-225-6200-900	M83513 / 33-H02CP	MK-443-100-235-6200-900	M83513 / 33-H03CP	MK-443-100-245-6200-900
M83513 / 33-H01CT	MK-443-100-225-0000-0B7	M83513 / 33-H02CT	MK-443-100-235-0000-0B7	M83513 / 33-H03CT	MK-443-100-245-0000-0B7
M83513 / 33-H01CW	MK-443-100-225-6200-0B7	M83513 / 33-H02CW	MK-443-100-235-6200-0B7	M83513 / 33-H03CW	MK-443-100-245-6200-0B7
M83513 / 33-H01NN	MK-442-100-225-0000-900	M83513 / 33-H02NN	MK-442-100-235-0000-900	M83513 / 33-H03NN	MK-442-100-245-0000-900
M83513 / 33-H01NP	MK-442-100-225-6200-900	M83513 / 33-H02NP	MK-442-100-235-6200-900	M83513 / 33-H03NP	MK-442-100-245-6200-900
M83513 / 33-H01NT	MK-442-100-225-0000-0B7	M83513 / 33-H02NT	MK-442-100-235-0000-0B7	M83513 / 33-H03NT	MK-442-100-245-0000-0B7
M83513 / 33-H01NW	MK-442-100-225-6200-0B7	M83513 / 33-H02NW	MK-442-100-235-6200-0B7	M83513 / 33-H03NW	MK-442-100-245-6200-0B7
M83513 / 33-H01PN	MK-445-100-225-0000-900	M83513 / 33-H02PN	MK-445-100-235-0000-900	M83513 / 33-H03PN	MK-445-100-245-0000-900
M83513 / 33-H01PP	MK-445-100-225-6200-900	M83513 / 33-H02PP	MK-445-100-235-6200-900	M83513 / 33-H03PP	MK-445-100-245-6200-900
M83513 / 33-H01PT	MK-445-100-225-0000-0B7	M83513 / 33-H02PT	MK-445-100-235-0000-0B7	M83513 / 33-H03PT	MK-445-100-245-0000-0B7
M83513 / 33-H01PW	MK-445-100-225-6200-0B7	M83513 / 33-H02PW	MK-445-100-235-6200-0B7	M83513 / 33-H03PW	MK-445-100-245-6200-0B7

The AirBorn Advantage

Model-To-Market Solutions

Custom Power Systems

COTS VPX Power Supply Power Blade

Flexible Circuit Assemblies

Cable Assemblies

FUZE Assemblies

Active Optical Assemblies

Rectangular W Series

Rectangular R Series

Micro D M Series

Nano D N Series

High-Speed Rectangular verSI

Modular Hybrid SInergy

Macro D RocKet

Z Axis Interposer Z Series

High-Speed Micro D microSI

Stackable RC Series

Circulars Series 360

Strip Connector AirStrip

PowerAmp 13A or 23A

Rugged Circulars TriMate

MSC-4.24

AirBorn

p. 512.863.5585

www.airborn.com